labXpert Communication Protocol

Contents

Contents **1**
Revision History **3**
Chapter 1 Connection Control **4**
1.1 labXpert as TCP Server 4
1.2 labXpert as TCP Client 4
1.3 HL7 Communication between Network Interfaces 4
1.4 Communication with Windows Shared Folders 4
Chapter 2 HL7 Communication Protocol **9**
2.1 Introduction 9
2.2 Low-Level Transmission Protocol 9
2.3 HL7 Message Level Protocol 9
2.3.1 HL7 Protocol Overview 9
2.3.2 HL7 Low-Level Message Protocol 9
2.4 Duplex Communication 10
2.4.1 Mostly used messages: 10
2.5 HL7 Segment Definitions 11
2.5.1 MSH 12
2.5.2 MSA 13
2.5.3 PID 14
2.5.4 PV1 15
2.5.5 OBR 15
2.5.6 OBX 17
2.5.7 ORC 19
2.6 Complete Message Examples 20
2.6.1 Sample Message 21
2.6.2 Sample Response Message 26
2.6.3 Bidirectional LIS/HIS Request Message 26
2.6.4 2-Way LIS/HIS Request Response Message 26
Appendix A. HL7 Protocol Overview **29**
A.1 Grammar 29
A.1.1 Message Constructing Principles 29
A.1.2 Principles of Escape Character Conversion 29
Appendix B. HL7 Data Type Definition **31**
Appendix C. Message Coding Definition **33**
Appendix D. Base64 Encoding Process **42**

Appendix E. Communication Log 43
Appendix F. Communication Setup 44
Appendix G. Enable the Guest Account 49
Appendix H. JSON Standard 54
Appendix I. Tables and Figures 55

Revision History

Protocol Version	Manual Version	ECR	Position	Revision Description	Revised by
1.0	/	/		Initial release of communication protocols	Li Ben Zhang Zugang Liu Fei
2.0	/	ENT023	1.1 LabXpert introduction Appendix C. Message Coding Definition Appendix F. Communication Setup	1.1 LabXpert introduction: One Urine labXpert can only connect one set of urine analysis system (EU 8600/EU 8600 GT/ EU-5600 Pro/EU -5300 Pro). Appendix C.：In Formed Elements part, serveral Data information is modified, and new parameters are added. Appendix F.：Add "Split Result Transmission" function in Comm.Setup.	Zhang Zugang; Liu Fei 2024-11-25

Chapter 1 Connection Control

1.1 LabXpert introduction

One Urine labXpert can only connect one set of urine analysis system (EU 8600/EU 8600 GT/ EU-5600 Pro/EU -5300 Pro).

1.2 labXpert as TCP Server

The TCP server starts monitoring after the labXpert is started up or the communication setup is modified. It can accept one LIS/HIS connection which sustains until message transmission fails, the communication setup is modified or the labXpert is closed.

1.3 labXpert as TCP Client

After the labXpert starts up or communication setup is modified, the system will try to reconnect to LIS/HIS once. If the connection is not established in 10s, it is regarded as failed. But the connection failing is not reported as an error on the software screen, and the system will try to reconnect until the communication is established.

If the connection is not built up, the TCP client will try to reconnect when there is a communication call. If the connection is not established in 10s, a communication error will be reported and the communication will be canceled.

If the connection is established suceessfully, it will sustain until the communication setup is modified or the labXpert is closed.

1.4 HL7 Communication between Network Interfaces

As for one-way LIS/HIS communication messages like the analysis results of blood or control samples, you can select synchronous response in HL7 protocol, which means after the labXpert sends a message, it will send the next message after receiving the response from LIS/HIS or after response time-out. The 15ID protocol does not support synchronous response.

While saving worklist, or run a count without worklist, the labXpert initiates a LIS/HIS search request, and LIS/HIS responds to the request in 10s. If the response is received successfully, the labXpert will save the information or run the count in the mode acquired from LIS/HIS.

1.5 Communication with Windows Shared Folders

1. The Mindray labXpert exchanges files with the LIS through Windows shared folders.
   The shared folders are located on a PC that serves as the labXpert server or on a PC that does not serve as the labXpert server. Two folders are used respectively to send results and receive work orders. The communication setting interface is as follows:

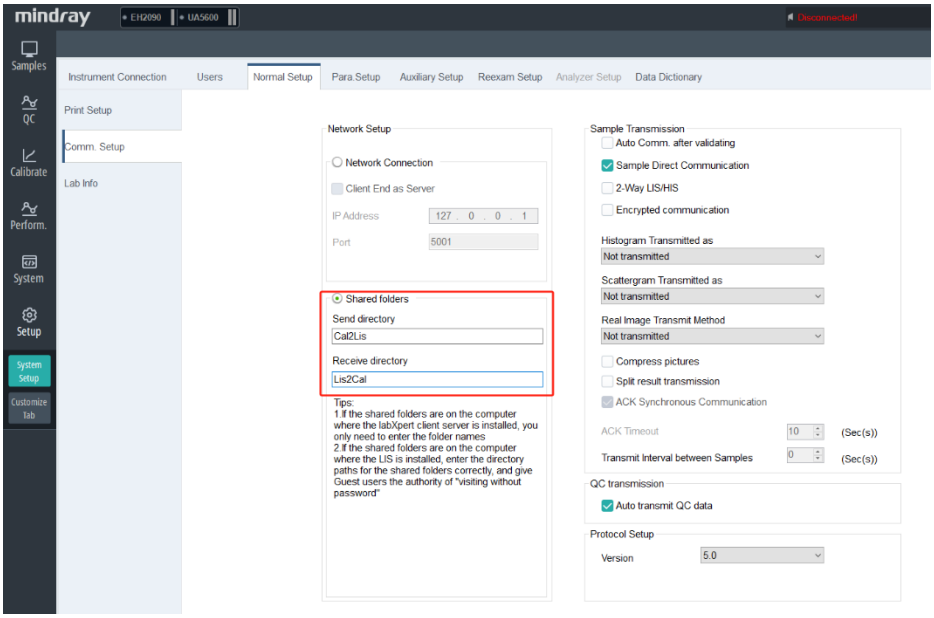

Figure 1 Communication Settings

If the folders are located on a PC that serves as the labXpert server, the folders are set as follows:

Folder name	Description
Cal2Lis	1、 Used to store the results files sent from labXpert to the LIS. 2、 The path for the LIS to read results is \\IP address of the PC installed with labXpert server\Cal2Lis
Lis2Cal	1、 Used to store the sample reception work orders related to the labXpert only. 2、 The path for the LIS to write the work orders is \\IP address of the PC installed with labXpert server\Cal2Lis

Cal2Lis and LisCal are used for examples for the naming of shared holders only. Users may define their own namings of the folders.

If the folders are located on a PC that is not served as the labXpert server, the folders are set as follows:

Folder name	Note
\\IPaddress\Cal2Lis	Used to store the results files sent from labXpert to the LIS.
\\IPaddress \Lis2Cal	Used to store the sample reception work orders related to the labXpert only.

The IP address here refers to the IP address of the PC where the shared folders are located, and can also be set to the host name.

2. File format and interaction process

1） Sample/ QC results from labXpert to LIS

- Writing in files: labXpert writes the files into the folders, and ensures no repeated folder names. Naming standard for folders: YYYYMMDDHHMMSSfff_barcode ID (or sample ID).dat
- File reading: After labXpert writes in the file, LIS reads the file within 3 seconds, and then deletes the file after reading the file.
- The interaction process as follows:

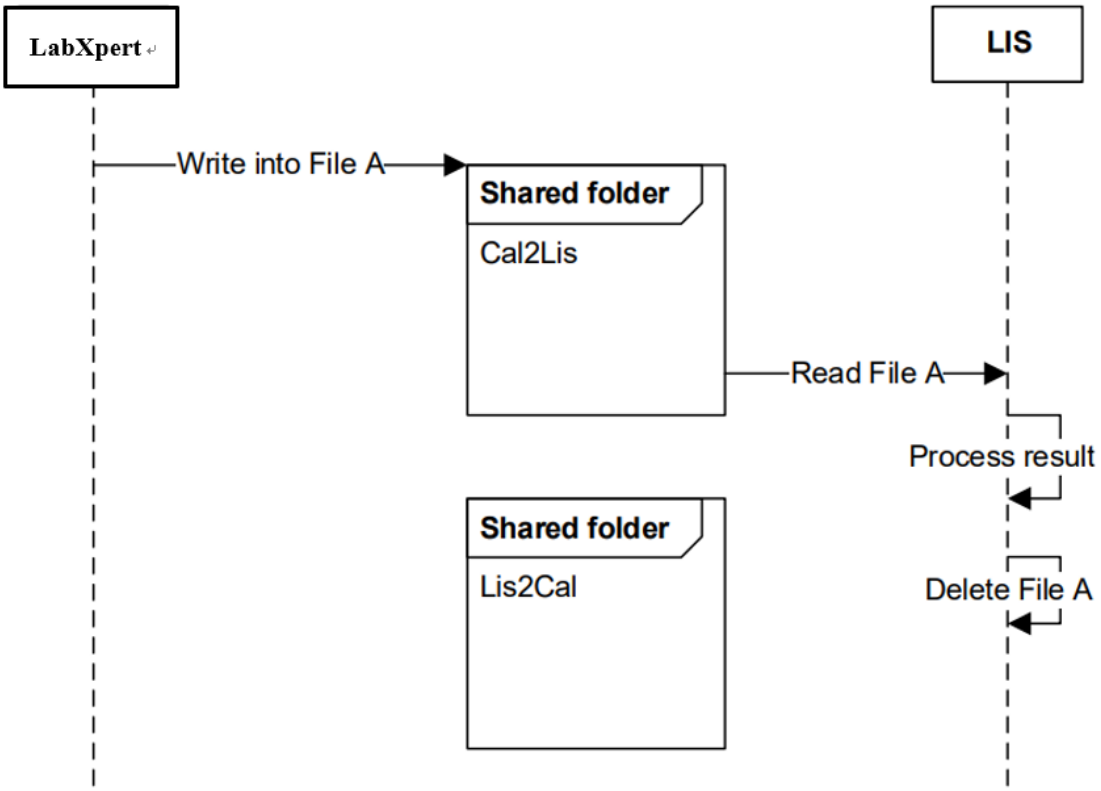

Figure 2 Result transmission by shared folders

- Sample results Demo file

MSH|^~\&|LabXpert|Mindray|||20240523165552||ORU^R01|2|P|2.3.1|||||UNICODE

PID|1||130626200601^^^^MR||^Zhang Shuzhen||20200124000000|Unknown

PV1|1|Inpatient|Surgery Department^^9-4585S|||||||||||||||By insurance

OBR|1||ENT019009|00001^AutomatedCount^99MRC||20240522105224|20240522114527|||Zhang Fei|||High blood pressure|20240522111224|||||||||HM|NotValidated||||||develop

OBX|1|IS|08001^Take Mode^99MRC||A|||||F

OBX|2|IS|08003^Test Mode^99MRC||CHEM|||||F

OBX|3|IS|01002^Ref Group^99MRC||Children|||||F

OBX|4|NM|30525-0^Age^LN||4|yr||||F

OBX|5|ST|01001^Remark^99MRC|||||||F

OBX|6|IS|05007^Project Type^99MRC||UR|||||F

OBX|7|IS|01007^Sample Type^99MRC||Urine|||||F

OBX|8|IS|01008^Patient Area^99MRC||Inpatient Department|||||F

OBX|9|ST|01012^Shelf No^99MRC||9|||||F

OBX|10|ST|01013^Tube No^99MRC||10|||||F

OBX|11|ST|09001^Analyzer^99MRC||UA-5600-1|||||F

OBX|12|ST|09003^SN^99MRC||5600|||||F

OBX|13|ST|09999^AuditResult^99MRC||Review|||||F

OBX|14|NM|16601^URO^99MRC||norm.(17μmol/L)||norm.|N|||F

OBX|15|NM|16604^BIL^99MRC||-(0μmol/L)||-|N|||F

OBX|16|NM|16608^KET^99MRC||-(0mmol/L)||-|N|||F
OBX|17|NM|16612^BLD^99MRC||3+(200Ery/μL)||-|H~N|||F
OBX|18|NM|16603^PRO^99MRC||-(0g/L)||-|N|||F
OBX|19|NM|16611^PH^99MRC||5.0||5.0-8.0|N|||F
OBX|20|NM|17511^SGP^99MRC||1.000||1.003-1.030|L~N|||F
OBX|21|NM|16609^NIT^99MRC||-||-|N|||F
OBX|22|NM|16600^LEU^99MRC||-(0Leu/μL)||-|N|||F
OBX|23|NM|16605^GLU^99MRC||-(0mmol/L)||-|N|||F
OBX|24|NM|16606^VITC^99MRC||-(0mmol/L)||-|N|||F
OBX|25|NM|16614^COLOR^99MRC||Colorless||/|N|||F
OBX|26|NM|17500^TURB^99MRC||Slightly turbid||Clear|H~N|||F

2） LIS providing the work orders

- File writing: Upon rececipt of sample, the LIS immediately writes the file into the Lis2Cal folder. The file is named "Date&Time_Sample barcode.dat", where Date&Time is in the format of "YYYYMMDDhhmmss".
  For example, "20160729150913_30521678.dat".
- If sample information changes after receipt, the work order file must be re-written.
- File reading: the labXpert reads the file within 3 seconds, and deletes the file after reading the file.
- The interaction process as follows:

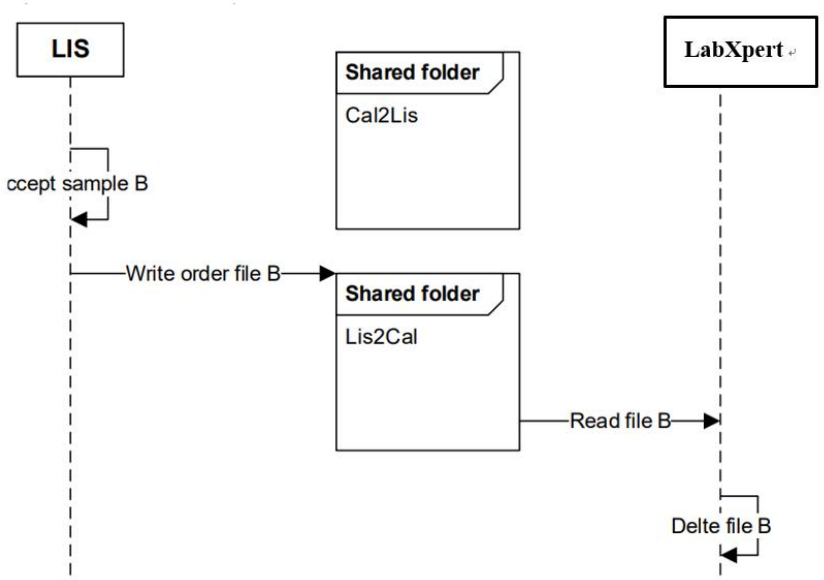

Figure 3 Receive work orders by shared folders

- Work order results Demo file：

MSH|^~\&|Lis||||20240523170359||ORR^O02|0|P|2.3.1|||P|||UNICODE
MSA|AA|1||||
PID|1||220112198503^^^^MR||^Xv Xia||19261208000000|Male
PV1|1|Emergency|ICU^^H98-35B|||||||||||||||Self payment
ORC|AF|1009
OBR|1|1009||00001^Automated Count^99MRC||20240523145651||||Jin Hui|||Acute upper gastrointestinal

hemorrhage|20240523151651||||||||||
OBX|1|IS|05007^Project Type^99MRC||UR||||||F
OBX|4|IS|08003^Test Mode^99MRC||CHEM+SEDIM||||||F
OBX|5|NM|30525-0^Age^LN||97|yr|||||F
OBX|7|IS|01007^Sample Type^99MRC||Urine||||||F
OBX|8|ST|01008^Patient Area^99MRC||Inpatient department||||||F
OBX|9|ST|08005^SerialNumber^99MRC||1009||||||F
OBX|10|ST|01001^Remark^99MRC|||||||F

3. Technical requirements on file reading/writing
   - File writing
     - ✓ Write mode: Write a file in exclusive mode to prevent that the peer end reads the file before the file is completely written.
     - ✓ File permission: All users can have full control over files.
     - ✓ On the PC where the shared folders are located, the Guest account must be activated, and the password of the Guest account must be set to null. For details about the configuration method, see "Appendix G".

   - File reading

     If a file cannot be read, the peer end is still writing the file. In this case, read the file later.
4. About the labXpert-LIS connection status indicator

   In this file transfer mode, if shared folders exist, the indicator is on; otherwise, the indicator is off.

   If LIS communication error occurs, support from the LIS side is needed.

Chapter 2 HL7 Communication Protocol

2.1 Introduction

The LIS/ HIS communication function of the labXpert enabled the communication between the analyzer and the PC in laboratory through Ethernet, including sending analysis results to and receiving work orders from lab PC.

This communication protocol is defined based on the HL7 Standards. HL7 is a series of electronic data exchange standards for healthcare industry, which is originally defined by the US and is now adopted worldwide. This protocol is defined based on HL7 v2.3.1. For details of HL7 standards, see HL7 Interface Standards Version 2.3.1.

2.2 Low-Level Transmission Protocol

The labXpert communicates through TCP or serial port. See Connection Control for details.

2.3 HL7 Message Level Protocol

2.3.1 HL7 Protocol Overview

(See Appendix A)

2.3.2 HL7 Low-Level Message Protocol

HL7 of high-level protocol is based on messages. The function of terminating the message is not provided. In order to determine the message boundary, the MLLP low-level protocol is used (see HL7 Interface Standards Version 2.3.1).

Communication Level

Messages are transmitted in the following format:
<SB> ddddd <EB><CR>
among which:

<SB> = Start Block character (1 byte)
ASCII <VT>,i.e.,<0x0B>. Do not confuse with the SOH or STX character in ASCII.

***ddddd* = Data (variable number of bytes)**
ddddd is the effective data of HL7 message and expressed in the form of string. For the strings used in the HL7 interface messages of the labXpert the UTF-8 code is used.

<EB> = End Block character (1 byte)
ASCII <FS>，i.e., <0x1C>. Do not confuse with the ETX or EOT character in ASCII.

<CR> = Carriage Return (1 byte)
ASCII carriage return character, i.e. <0x0D>.

2.4 Duplex Communication

1. The labXpert directly sends the analysis results (or QC data) to LIS, as shown in Figure 4.

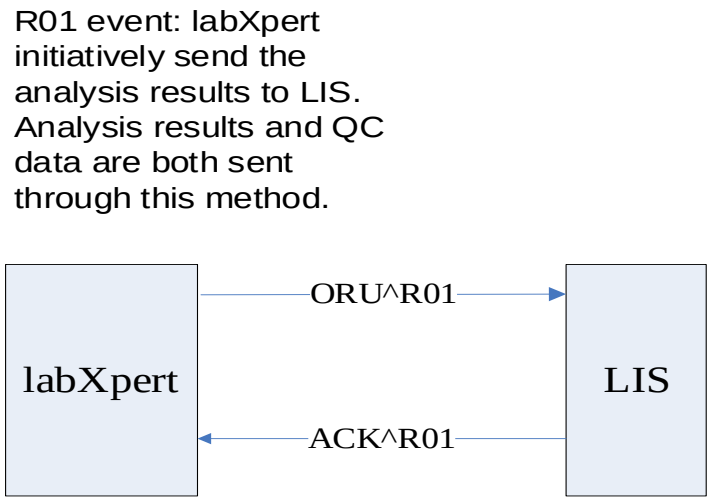

Figure 4Analysis results, QC data communication process

2. Worklist information searching

Worklist belongs to the Order message. Thus, the corresponding HL7 messages: ORM (General Order Message), ORR (General Order Response Message) can be used. The communication process is shown in Figure 5.

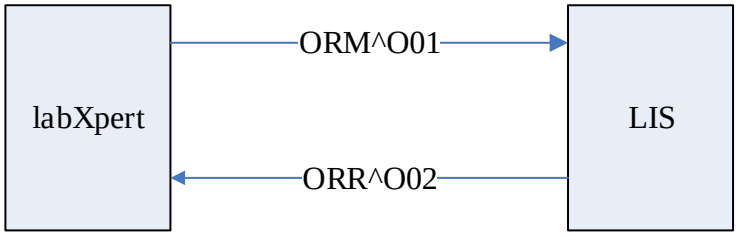

Figure 5 Worklist request communication process

2.4.1 Mostly used messages:

ORU^R01 messages: it is mostly used for the transmission of the analysis results and QC data

ORU	Observational Results (Unsolicited)	Description

MSH Message Header, mandatory, including the communication information like message No., sending time, message delimiter and coding method, etc.

{

PID Patient demographic information, including patient name, gender, patient ID, date of birth, etc.

[PV1] Patient visit information, including patient type, department, bed No. and payer*, etc.

{

OBR sample information, including sample No., operator and time of analysis, etc.

{[OBX]} analysis data, including analysis results and mode of analysis, etc.

}
}

ACK^R01 message: it confirms the receival of ORU^R01 message.

ACK	Acknowledgment	Description
MSH	Message header	
MSA	message acknowledgment, describing whether it has received the transmitted message	

ORM^O01 message: Common order message, all the actions related to order basically use the message of this type. For example, create a new order or cancel an order. Here, the labXpert requests LIS/HIS to re-fill the order message.

ORM	General Order Message	Description
MSH	Message header	
{ORC}	Common message of Order, including the ID information of the sample searched	

ORR^O02 Message: acknowledgement of the ORM^O01 message. Here, returning the completed information of order (i.e. worklist).

ORR^O02	General Order Response Message	Description
MSH	Message header	
MSA	Message acknowledgement	
[PID	Patient information	
[PV1]]	patient visit information	
{		
ORC	Common message of Order, including the sample ID	
[		
OBR	Sample information	
{[OBX]}	Data of other sample information, including analysis mode, etc.	
]		
}		

2.5 HL7 Segment Definitions

The tables in this section provide detailed definitions of the fields in all the message segments. Each row provides the information of one field, and the content of each column is described as follows:

1、 No.: the HL7 message begins with the segment name of 3 characters followed by the fields which are separated by delimiters. "No." refers to the order of the field in the HL7 message segment.

E.g.

```
PID          | 1        |      |7393670^^^^MR||^Liu||19950804000000|F
 ↑           ↑                 ↑
Segment name  Field 1           Field 3
```

Message example 2-1 Example of HL7 segment No.

Note: for MSH segment, the field delimiter subsequential to the segment name is considered to be the first field, used to define the field delimiter values of the whole message.

2、 Field name: the logic sense of the field.

3、 Data type: the data type based on HL7 standards. See Appendix A Appendix A for details;

4、 Recommended Max Length the recommended max length based on HL7 standards. Recommended Max Length the recommended max length based on HL7 standards. But during the communication process, the data length may be longer than recommended, in which case the fields shall be identified by delimiters while analyzing the message segment.

5、 Description: description to the value of the field.

6、 Example: example of the fields.

2.5.1 MSH

MSH (Message Header) segment contains basic information of HL7 messages, including delimiter value, message type and coding method etc. It is the first field of every HL7 message.

Message example:

MSH|^~\&|LabXpert|Mindray|||20101012092538||ORU^R01|1|P|2.3.1|||||UNICODE

See Table 1 Table 1 for definition of each field in MSH segment.

Table 1 MSH Field Definitions

No.	Field/ Delimiter Name	Data Type	Recommended Max Length	Description	Example:
1	Field Delimiter	ST	1	Includes the delimiter of the first field after the segment name; used to determine the delimiter values of the rest part of the message.	|
2	Encoding Characters	ST	4	Includes component delimiters, repetition delimiters, escape delimiters and subcomponent delimiters.	^~\&
3	Sending application	EI	180	Application of sending terminal.	labXpert
4	Sending application	EI	180	Sending Facility Device of sending terminal. Value: Mindray (in Chinese and English version)	Mindray
7	Date/Time Of Message	TS	26	Time of creating the message (in the format of YYYY[MM[DD[HH[MM[SS]]]]]), using the system time	20101012092538
9	Massage Type	CM	7	Message type, in the format of "message type^event type".	ORU^R01
10	Message Control ID	ST	20	Message control ID, used as the unique identifier of a message.	1
11	Processing ID	PT	3	Processing ID Value: “P”- sample and worklist request message; "Q"- QC analysis result message; In Ack messages, it is consistent with the previously	P

No.	Field/ Delimiter Name	Data Type	Recommended Max Length	Description	Example:
				received message.	
12	Version ID	VID	60	HL7 version number. Value: "2.3.1".	2.3.1
18	Character Set	ID	10	Character set. Value: "UNICODE", which means the message in communication is expressed in UTF-8 strings. Value: "LOCAL", which means the message in communication is expressed in Transmits Sample Local strings.	UNICODE

2.5.2 MSA

The MSA (Message Acknowledgement) segment contains message acknowledge information.

Message example:

MSA|AA|1

See Table 2 Table 2 for field1 definitions in use.

Table 2 MSA Field Definitions

No.	Field/ Delimiter Name	Data Type	Recommended Max Length	Note	Example:
1	Acknowledgment Code	ID	2	Acknowledgment code:“AA”- received; “AE” – error; “AR”- rejected, “AS”-skipped.	AA
2	Message Control ID	ST	20	Message control ID, consistent with the MSH-10 of the received message	1
6	Error Condition	CE	100	Error condition (status code), can be selected to transmit, and contains error condition descriptions; see Table 3 Table 3 for the values.	

Table 3 Error Codes of MSA-6 Field

Status Code (MSA-6)	Status Text (MSA-3)	Description/Remark
Succeeded:		AA
0	Message accepted	Succeeded:
Error status code:		AE
100	Segment sequence error	Segment sequence in the message is wrong, required segment missing
101	Required field missing	Required field in a segment missing
102	Data type error	Segment data type error, e.g. data type is character instead of numeric
103	Table value not found	Table value not found; not used temporarily

Status Code (MSA-6)	Status Text (MSA-3)	Description/Remark
Rejected status code:		AR
200	Unsupported message type	Message type not supported
201	Unsupported event code	Event code not supported
202	Unsupported processing id	Processing ID not supported
203	Unsupported version id	Unsupported version ID
204	Unknown key identifier	Unknown key identifier, e.g. transmitting a nonexistent patient information
205	Unknown key identifier	Repeated key words existed
206	Application record locked	Issues can not be executed in the application saving level, e.g. database is locked
207	Application internal error	Other unknown error of the application
Skipped:		AS

2.5.3 PID

The PID (Patient Identification) segment contains the patient demographic information.

Message example:

Example(CN):

PID|1||C1^^^^MR||^Zhang San||20101005084346|M

Example (Other langauges than CN):

PID|1||C1^^^^MR|| Jordan^Michael ||20101005084346|M

See Table 2 Table 4 for field1 definitions in use.

Table 4 PID Field Definitions

No.	Field/ Delimiter Name	Data Type	Recommended Max Length	Note	Example:
1	Set ID - PID	SI	4	Serial No., used to identify different PID segments in a message	1
3	Patient Identifier List	CX	20	Used as patient ID in the sample analysis result messages, in the form of "Patient ID^^^^MR". Used as batch No. of control in QC messages.	C1^^^^MR
5	Document Name	XPN	48	Patient name (consists of FirstName and LastName), in the form of "LastName^FirstName". For Chinese names, only enter FirstName. LastName is left blank.	Name (CN): ^张三 Name (non-Chinese): Jordan^Michael
7	Date/Time of Birth	TS	26	Used as time of birth in sample information messages.	20101005084346

No.	Field/ Delimiter Name	Data Type	Recommended Max Length	Note	Example:
				In the form of YYYY[MM[DD[HH[MM[SS]]]]]. Used as expiration date of the control in QC messages.	
8	Sex	IS	1	Gender, string. "M"/"m": Male "F"/"f": Female "U"/"u": Unknown Other content: Used as displaying character strings	M

2.5.4 PV1

PV1 (Patient Visit) contains the patient demographic information.

Message example:

PV1|1|Outpatient|Medicine^^BN1|||||||||||||||MedicalInsurance

See Table 2 Table 5 for field1 definitions in use.

Table 5 PV1 Field Definitions

No.	Field/ Delimiter Name	Data Type	Recommended Max Length	Note	Example:
1	Set ID - PV1	SI	4	Serial No., used to identify different PV1 segments in a message.	1
2	Patient Class	IS	1	Patient type, string, content not defined. Same with the strings displayed on the screen.	Outpatient
3	Assigned Patient Location	PL	80	Patient location information, in the form of "Department^ ^ Bed No."	Medicine^^BN1
20	Financial Class	FC	50	Payer, string, content not defined.	MedicalInsurance

2.5.5 OBR

The OBR (Observation Request) segment contains the test report information.

Message example:

OBR|1||TestSampleID1|00001^Automated Count^99MRC||20101006084439|20101009091515|||Li|||Cold|20101007084458|||||||||HM|||||||admin

See Table 2 Table 6 for field1 definitions in use.

Table 6 OBR Field Definitions

No.	Field/ Delimiter Name	Data Type	Recommended Max Length	Note	Example:
1	Set ID - OBR	SI	4	Serial No., used to identify different OBR segments in a message	1
2	Placer Order Number	EI	22	Used as sample ID in the worklist searching response messages (i.e. ORR^O02 messages).	
3	Filler Order Number +	EI	22	Used as sample ID in sample analysis result messages. Used as QC file No. in QC messages.	TestSampleID1
4	Universal Service ID	CE	200	Universal service ID, used to identify different types of analysis results. Refer to Appendix C Appendix C for value definition.	00001^Automated Count^99MRC
6	Requested Date/time	TS	26	Draw time. Used as the time when the blood sample is drawn.	20101006084439
7	Observation Date/Time #	TS	26	Time of analysis.	20101009091515
10	Collector Identifier *	XCN	60	Analysis orderer Here indicates the person who order the analysis.	Li
13	Relevant Clinical Info.	ST	300	Relevant clinical information. Can be used as the clinical diagnostic information of patient information.	Cold
14	Specimen Received Date/Time *	TS	26	Time when the sample is received. Used as the time when the analysis is ordered.	20101007084458
15	Specimen Source *	CM	300	Source of the sample. Reserved field for labXpert.	
22	Results Rpt/Status Chng - Date/Time +	TS	26	Result report/Status change - Time. Used as the time of validation.	
24	Diagnostic Serv Sect ID	ID	10	Diagnosis maker ID; value: "HM" (means Hematology)	HM
25	Result Status +	XCN	150	Status of the analysis result. Used as the mark for “Validated”. Validated Not Validated	Validated
28	Result Copies To	XCN	150	Copy the result to. Used as the person who validate the sample results.	
32	Principal Result Interpreter +	CM	200	Principal result interpreter. Used as the operator of the sample analysis in sample	admin

No.	Field/ Delimiter Name	Data Type	Recommended Max Length	Note	Example:
				messages. Used as the operator of the QC count in QC messages.	
33	Result Status +	XCN	150	Status of the analysis result. Used as the mark for printing. Printed Not printed	Printed
34	Result Status +	XCN	150	Status of the analysis result. Used as the mark for positive. Positive Negative	Positive

2.5.6 OBX

The OBX (Observation/ Result) segment contains the parameter information of each test result. In a complete sample/QC/bidirectional request message, there may be more than one OBX segment. These OBX segments are different according to the content for transmission. See Table 29 in Appendix C for detailed definitions.

Message example:

OBX|8|NM|6690-2^WBC^LN||2.20|10*9/L|4.00-10.00|L~A|||F

See Table 2 Table 7 for field1 definitions in use.

Table 7 OBX Field Definitions

No.	Field/ Delimiter Name	Data Type	Recommended Max Length	Note	Example:
1	Set ID - OBX	SI	10	Serial No., used to identify different OBX segments in a message.	8
2	Value Type	ID	3	Data type of the analysis result. Value: "ST", "NM", "ED", "IS", etc. See Appendix B for details.	NM
3	Observation Identifier	CE	590	Analysis item identifier. In the form of "ID^Name^EncodeSys", where ID is the identifier of the analysis item; Name is the description of the item; EncodeSys is the coding system of the item. See the configuration files and Appendix C Appendix C for the values of the codes for different items. Note: ID and EncodeSys are used to identify different analysis parameters, w	6690-2^WBC^LN

No.	Field/ Delimiter Name	Data Type	Recommended Max Length	Note	Example:
				hile Name is for description purpose r ather than identification.	
5	Observation Value	*	65535	Analysis result data, which can b e numeric, string, enumeration va lue, binary data, etc. See Append ix C Appendix C for detailed valu e definitions. (Binary data like hi stogram or scattergram are conve rted to codes using the Base64 c oding method. See Appendix D Appendix D for the coding metho d).	2.20
6	Units	CE	60	Unit of analysis items. Use the standa rd units defined in HL7. See Appen dix C Appendix C for units used in communication.	10*9/L
7	References Range	ST	60	Reference range of analysis results, in the form of "lower limit-higher limit", "<upper limit" or ">lower limit".	4.00~10.00
8	Abnormal Flags	ID	5	Analysis result flags. Value definitions: "N": normal "A": abnormal "H": higher than upper limit "L": lower than lower limit Note: The flag for normal or abnorma l and that for high or low result may appear in this field at the same time. In this case, the two types of flags ar e connected by a “~”, e.g. “H~A”	L~A
11	Observ Result Stat us	ID	1	Status of the analysis result. Value "F" -(Final Result): final result.	F
13	User Defined Acce ss Checks	ST	20	User-defined. For flags of reagent expi ration or modification, etc. In the for m of "Flag1~Flag2". There are 6 types of flags in all: O – reagent expired E – result edited e – result calculated from result edited C – result corrected V – result out of linearity range T – temperature error	

2.5.7 ORC

The ORC (Common Order) segment contains the common information of order.

Message example (searching by sample ID and sample type)

ORC|RF||SampleID|UR

Message example (searching by sample ID and sample type, in the meanwhile, for the “LIS Settings for Sample Receiving”, “Fill in tube position and SN” is enabled)

ORC|RF||SampleID|UR||2^3|13|||||||NW

See Table 8Table 8 for field definitions.

Table 8 ORC Field Definitions

No.	Field/ Delimiter Name	Data Type	Recommended Max Length	Note	Example:
1	Order Control	ID	2	Order control. In ORM message, the value is "RF", which means "re-fill order request". In ORR message, the value is "AF", which means "acknowledge order re-filling".	RF
2	Placer Order Number	EI	22	Code for order placer.	
3	Filler OrderNum	EI	22	Code for order receiver. In ORM or ORR messages, the value is null.	SampleID
4	Placer group number	ST	22	Code for order placer group Used for test panel here “BL” : Blood “BF”: Body fluid “UR”: Urine	UR
6	Tube position	CE	10	Tube position This field is used in the inqury messages when the “LIS receiving samples by SN” function is enabled (“More” - "System Setup" — "Comm. Setup"-“LIS Settings for Sample Receiving”) . When the function is disabled, the field is not used. The filed will be filled in the format of “rack No.^ tube position”.	2^3. In the above example, the field is filled as “2^3”, in which, “2” represents the rack number, “3” is the tube position where the sample is placed. When the inquired sample is analyzed in another sample presentation mode than the autoloading mode, the field is filled as “^” .

No.	Field/ Delimiter Name	Data Type	Recommended Max Length	Note	Example:
				When the inquired sample is analyzed in another sample presentation mode than the autoloading mode, the field is filled as “^” .	
7	Lis Sign Serial No	ST	10	Lis Sign Serial No This field is used in the inqury messages when the “LIS receiving samples by SN” function is enabled (“More” - "System Setup" — "Comm. Setup"-“LIS Settings for Sample Receiving”) . When the function is disabled, the field is not used. The SN is calculated in accordance with below formula: SN= [Rack No. – First Rack No.) * 10 + Tube No. When the inquired sample is analyzed in another sample presentation mode than the autoloading mode, the field is left empty.	In the above example, the field is filled as “2^3”, in which, “2” represents the rack number, “3” is the tube position the sample is placed. The first rack No. is set to “1”, therefore the SN is 13.
16	Order Control Code Reason	CE	50	LIS inquires the event causes. This field is used in the inqury messages when the “LIS receiving samples by SN” function is enabled (“More” - "System Setup" — "Comm. Setup"-“LIS Settings for Sample Receiving”) . When the function is disabled, the field is not used. The value is fixed as “NW” (New Order).	NW.

Note: for consistency and convenience, the sample IDs for both ORM message and for ORR message are put in Field 3. See the bi-directional LIS message examples (see 2.6.3 and 2.6.4 for details)

2.6 Complete Message Examples

The two message examples below show the communication process of sample data

2.6.1 Sample Message

2.6.1.1 Urine sample

Example (Dry chemistry results):

MSH|^~\&|LabXpert|Mindray|||20220901195758||ORU^R01|1|P|2.3.1|||||UNICODE

PID|1||^^^^MR

PV1|1

OBR|1||905|00001^Automated Count^99MRC|||20220901182103||||||||||||||HM|NotValidated||||||develop

OBX|1|IS|08001^Take Mode^99MRC||A|||||F

OBX|2|IS|08003^Test Mode^99MRC||CHEM|||||F

OBX|3|IS|01002^Ref Group^99MRC||General|||||F

OBX|4|IS|05007^Project Type^99MRC||UR|||||F

OBX|5|ST|01012^Shelf No^99MRC||??|||||F

OBX|6|ST|09001^Analyzer^99MRC||UA5600|||||F

OBX|7|ST|09003^SN^99MRC||KFYJ-5#|||||F

OBX|8|ST|09999^AuditResult^99MRC||Review|||||F

OBX|9|NM|16601^URO^99MRC||norm.||norm.|N|||F

OBX|10|NM|16604^BIL^99MRC||-||-|N|||F

OBX|11|NM|16608^KET^99MRC||-||-|N|||F

OBX|12|NM|16612^BLD^99MRC||-||-|N|||F

OBX|13|NM|16603^PRO^99MRC||-||-|N|||F

OBX|14|NM|16611^PH^99MRC||7.0||5.0-8.0|N|||F

OBX|15|NM|17511^SGP^99MRC||1.008|||N|||F

OBX|16|NM|16609^NIT^99MRC||+||-|H~N|||F

OBX|17|NM|16600^LEU^99MRC||-||-|N|||F

OBX|18|NM|16605^GLU^99MRC||-||-|N|||F

OBX|19|NM|16606^VITC^99MRC||2+||-|H~N|||F

OBX|20|NM|16613^CA^99MRC||2.5|mmol/L|2.5-7.5|N|||F

OBX|21|NM|16610^CRE^99MRC||0.9|mmol/L|4.4-17.7|L~N|||F

OBX|22|NM|16602^MCA^99MRC||30|mg/L|<20|H~N|||F

OBX|23|NM|16614^COLOR^99MRC||Colorless||/|N|||F

OBX|24|NM|17500^TURB^99MRC||Clear||Clear|N|||F

OBX|25|NM|16616^AC^99MRC||33.90|mg/mmol|<3.4|H~N|||F

OBX|26|NM|16615^PC^99MRC||0.00|mg/mmol|<16.95|N|||F

Example (Dry chemistry results of dual units):

MSH|^~\&|LabXpert|Mindray|||20230817184754||ORU^R01|22|P|2.3.1|||||UNICODE

PID|1||^^^^MR

PV1|1

OBR|1||10|00001^Automated Count^99MRC|||20230814104851|||||||||||||||HM|NotValidated||||||develop

OBX|1|IS|08001^Take Mode^99MRC||A|||||F

OBX|2|IS|08003^Test Mode^99MRC||CHEM |||||F

OBX|3|IS|01002^Ref Group^99MRC||General||||||F

OBX|4|IS|05007^Project Type^99MRC||UR||||||F

OBX|5|ST|01012^Shelf No^99MRC||14|||||F

OBX|5|ST|01012^Shelf No^99MRC||14|||||F

OBX|7|ST|09001^Analyzer^99MRC||5600|||||F

OBX|8|ST|09003^SN^99MRC||5600|||||F

OBX|9|ST|09999^AuditResult^99MRC||Review|||||F

OBX|10|NM|16601^URO^99MRC||norm.(1mg/dL)||norm.|N|||F

OBX|11|NM|16604^BIL^99MRC||-(0mg/dL)||-|N|||F

OBX|12|NM|16608^KET^99MRC||-(0mg/dL)||-|N|||F

OBX|13|NM|16612^BLD^99MRC||-(0Ery/μL)||-|N|||F

OBX|14|NM|16603^PRO^99MRC||1+(30mg/dL)||-|H~N|||F

OBX|15|NM|16611^PH^99MRC||7.5||5.0-8.0|N|||F

OBX|16|NM|17511^SGP^99MRC||1.000||1.003-1.030|L~N|||F

OBX|17|NM|16609^NIT^99MRC||+||-|H~N|||F

OBX|18|NM|16600^LEU^99MRC||+-(15Leu/μL)||-|H~N|||F

OBX|19|NM|16605^GLU^99MRC||-(0mg/dL)||-|N|||F

OBX|20|NM|16606^VITC^99MRC||3+(40mg/dL)||-|H~N|||F

OBX|21|NM|16613^CA^99MRC||10.0|mmol/L|2.5-7.5|H~N|||F

OBX|22|NM|16610^CRE^99MRC||0.9|mmol/L|4.4-17.7|L~N|||F

OBX|23|NM|16602^mALB^99MRC||10|mg/L|<20|N|||F

OBX|24|NM|16614^COLOR^99MRC||Colorless||/|N|||F

OBX|25|NM|17500^TURB^99MRC||Turbid||Clear|H~N|||F

OBX|26|NM|16616^AC^99MRC||11.11|mg/mmol|<3.4|H~N|||F

OBX|27|NM|16615^PC^99MRC||333.33|mg/mmol|<16.95|H~N|||F

Example (Formed element results)

MSH|^~\&|LabXpert|Mindray|||20240311150236||ORU^R01|4|P|2.3.1|||||UNICODE

PID|1||^^^^MR

PV1|1

OBR|1||0311-4|00001^Automated Count^99MRC|||20240311104231|||||||||||||||HM|NotValidated||||||develop

OBX|1|IS|08001^Take Mode^99MRC||A|||||F
OBX|2|IS|08003^Test Mode^99MRC||CHEM+SEDIM|||||F
OBX|3|IS|01002^Ref Group^99MRC||General|||||F
OBX|4|IS|05007^Project Type^99MRC||UR|||||F
OBX|5|ST|01012^Shelf No^99MRC||1|||||F
OBX|6|ST|01013^Tube No^99MRC||4|||||F
OBX|7|ST|09001^Analyzer^99MRC||EU-5300 Pro-1|||||F
OBX|8|ST|09003^SN^99MRC||5300|||||F
OBX|9|ST|09999^AuditResult^99MRC||Review|||||F
OBX|10|NM|16601^URO^99MRC||norm.||norm.|N|||F
OBX|11|NM|16604^BIL^99MRC||-||-|N|||F
OBX|12|NM|16608^KET^99MRC||-||-|N|||F
OBX|13|NM|16612^BLD^99MRC||2+||-|H~N|||F
OBX|14|NM|16603^PRO^99MRC||1+||-|H~N|||F
OBX|15|NM|16611^PH^99MRC||9.0||5.0-8.0|H~N|||F
OBX|16|NM|17511^SG^99MRC||1.005||1.005-1.030|N|||F
OBX|17|NM|16609^NIT^99MRC||+||-|H~N|||F
OBX|18|NM|16600^LEU^99MRC||-||-|N|||F
OBX|19|NM|16605^GLU^99MRC||-||-|N|||F
OBX|20|NM|16606^VITC^99MRC||1+||-|H~N|||F
OBX|21|NM|16614^COLOR^99MRC||无色||/|N|||F
OBX|22|NM|16617^RBCU^99MRC||47.2|/μL|0.0-10.0|H~N|||F
OBX|23|NM|16618^WBCU^99MRC||0.5|/μL|0.0-16.0|N|||F
OBX|24|NM|16619^WBCC^99MRC||0.0|/μL|0.0-1.0|N|||F
OBX|25|NM|16620^BACT^99MRC||129.9|/μL|0.0-488.0|N|||F
OBX|26|NM|17501^YST^99MRC||0.0|/μL|0.0-1.0|N|||F
OBX|27|NM|16622^EC^99MRC||0.0|/μL|0.0-24.0|N|||F
OBX|28|NM|16624^CRYS^99MRC||34.6|/μL|0.0-14.0|H~N|||F
OBX|29|NM|16625^HYAC^99MRC||0.0|/μL|0.0-1.0|N|||F
OBX|30|NM|16626^UNCC^99MRC||0.0|/μL|0.0-0.5|N|||F
OBX|31|NM|16627^MUC^99MRC||0.0|/μL|0.0-137.0|N|||F
OBX|32|NM|16629-1^NORMOCYTE#^99MRC||6.2|/μL||N|||F
OBX|33|NM|17532^ACARBC^99MRC||0.0|/μL||N|||F
OBX|34|NM|17502^BACTC^99MRC||13.6|/μL|0.0-488.0|N|||F
OBX|35|NM|17503^BACTR^99MRC||116.3|/μL|0.0-488.0|N|||F
OBX|36|NM|17535^GHORBC^99MRC||14.0|/μL||N|||F
OBX|37|NM|16623^SRC^99MRC||0.0|/μL|0.0-3.0|N|||F
OBX|38|NM|17506^CAOXM^99MRC||0.0|/μL|0.0-14.0|N|||F
OBX|39|NM|17507^CAOXD^99MRC||34.6|/μL|0.0-14.0|H~N|||F
OBX|40|NM|17509^TRI^99MRC||0.0|/μL|0.0-14.0|N|||F
OBX|41|NM|17508^URI^99MRC||0.0|/μL|0.0-14.0|N|||F
OBX|42|NM|17510^SPRM^99MRC||0.0|/μL|0.0-1.0|N|||F
OBX|43|NM|17529^MACRBC^99MRC||0.0|/μL||N|||F
OBX|44|NM|17530^MICRBC^99MRC||11.2|/μL||N|||F

OBX|45|NM|17531^ANNRBC^99MRC||3.4|/μL||N|||F
OBX|46|NM|17533^HPDRBC^99MRC||9.0|/μL||N|||F
OBX|47|NM|17534^JAGRBC^99MRC||0.0|/μL||N|||F
OBX|48|NM|17536^CRERBC^99MRC||0.0|/μL||N|||F
OBX|49|NM|17537^FRARBC^99MRC||0.0|/μL||N|||F
OBX|50|NM|17538^OABRBC^99MRC||3.4|/μL||N|||F
OBX|51|NM|16635^OTHER^99MRC||25.8|/μL||N|||F
OBX|52|NM|17539^MORINFRBC^99MRC||Dys RBC|||N|||F
OBX|53|NM|16630-2^POIKILOCYTE%^99MRC||87|%||N|||F

Example (Formed element results of dual units)

MSH|^~\&|LabXpert|Mindray|||20240311150805||ORU^R01|5|P|2.3.1|||||UNICODE
PID|1||^^^^MR
PV1|1
OBR|1||0311-4|00001^Automated Count^99MRC|||20240311104231|||||||||||||HM|NotValidated||||||develop
OBX|1|IS|08001^Take Mode^99MRC||A|||||F
OBX|2|IS|08003^Test Mode^99MRC||CHEM+SEDIM|||||F
OBX|3|IS|01002^Ref Group^99MRC||General|||||F
OBX|4|IS|05007^Project Type^99MRC||UR|||||F
OBX|5|ST|01012^Shelf No^99MRC||1|||||F
OBX|6|ST|01013^Tube No^99MRC||4|||||F
OBX|7|ST|09001^Analyzer^99MRC||EU-5300 Pro-1|||||F
OBX|8|ST|09003^SN^99MRC||5300|||||F
OBX|9|ST|09999^AuditResult^99MRC||Review|||||F
OBX|10|NM|16601^URO^99MRC||norm.||norm.|N|||F
OBX|11|NM|16604^BIL^99MRC||-||-|N|||F
OBX|12|NM|16608^KET^99MRC||-||-|N|||F
OBX|13|NM|16612^BLD^99MRC||2+||-|H~N|||F
OBX|14|NM|16603^PRO^99MRC||1+||-|H~N|||F
OBX|15|NM|16611^PH^99MRC||9.0||5.0-8.0|H~N|||F
OBX|16|NM|17511^SG^99MRC||1.005||1.005-1.030|N|||F
OBX|17|NM|16609^NIT^99MRC||+||-|H~N|||F
OBX|18|NM|16600^LEU^99MRC||-||-|N|||F
OBX|19|NM|16605^GLU^99MRC||-||-|N|||F
OBX|20|NM|16606^VITC^99MRC||1+||-|H~N|||F
OBX|21|NM|16614^COLOR^99MRC||Colorless||/|N|||F
OBX|22|NM|16617^RBCU^99MRC||47.2|/μL|0.0-10.0|H~N|||F
OBX|23|NM|16617-1^RBCU^99MRC||28.3|/HPF|0.0-6.0|H~N|||F
OBX|24|NM|16618^WBCU^99MRC||0.5|/μL|0.0-16.0|N|||F
OBX|25|NM|16618-1^WBCU^99MRC||0.3|/HPF|0.0-9.6|N|||F
OBX|26|NM|16619^WBCC^99MRC||0.0|/μL|0.0-1.0|N|||F
OBX|27|NM|16619-1^WBCC^99MRC||0.0|/HPF|0.0-0.6|N|||F
OBX|28|NM|16620^BACT^99MRC||129.9|/μL|0.0-488.0|N|||F

OBX|29|NM|16620-1^BACT^99MRC||77.9|/HPF|0.0-292.8|N|||F
OBX|30|NM|17501^YST^99MRC||0.0|/µL|0.0-1.0|N|||F
OBX|31|NM|17501-1^YST^99MRC||0.0|/HPF|0.0-0.6|N|||F
OBX|32|NM|16622^EC^99MRC||0.0|/µL|0.0-24.0|N|||F
OBX|33|NM|16624^CRYS^99MRC||34.6|/µL|0.0-14.0|H~N|||F
OBX|34|NM|16624-1^CRYS^99MRC||20.8|/HPF|0.0-8.4|H~N|||F
OBX|35|NM|16625^HYAC^99MRC||0.0|/µL|0.0-1.0|N|||F
OBX|36|NM|16625-1^HYAC^99MRC||0.0|/HPF|0.0-0.6|N|||F
OBX|37|NM|16626^UNCC^99MRC||0.0|/µL|0.0-0.5|N|||F
OBX|38|NM|16626-1^UNCC^99MRC||0.0|/HPF|0.0-0.3|N|||F
OBX|39|NM|16627^MUC^99MRC||0.0|/µL|0.0-137.0|N|||F
OBX|40|NM|16627-1^MUC^99MRC||0.0|/HPF|0.0-82.2|N|||F
OBX|41|NM|16629-1^NORMOCYTE#^99MRC||6.2|/µL||N|||F
OBX|42|NM|17532^ACARBC^99MRC||0.0|/µL||N|||F
OBX|43|NM|17502^BACTC^99MRC||13.6|/µL|0.0-488.0|N|||F
OBX|44|NM|17502-1^BACTC^99MRC||8.2|/HPF|0.0-292.8|N|||F
OBX|45|NM|17503^BACTR^99MRC||116.3|/µL|0.0-488.0|N|||F
OBX|46|NM|17503-1^BACTR^99MRC||69.8|/HPF|0.0-292.8|N|||F
OBX|47|NM|17535^GHORBC^99MRC||14.0|/µL||N|||F
OBX|48|NM|16623^SRC^99MRC||0.0|/µL|0.0-3.0|N|||F
OBX|49|NM|17506^CAOXM^99MRC||0.0|/µL|0.0-14.0|N|||F
OBX|50|NM|17506-1^CAOXM^99MRC||0.0|/HPF|0.0-8.4|N|||F
OBX|51|NM|17507^CAOXD^99MRC||34.6|/µL|0.0-14.0|H~N|||F
OBX|52|NM|17507-1^CAOXD^99MRC||20.8|/HPF|0.0-8.4|H~N|||F
OBX|53|NM|17509^TRI^99MRC||0.0|/µL|0.0-14.0|N|||F
OBX|54|NM|17509-1^TRI^99MRC||0.0|/HPF|0.0-8.4|N|||F
OBX|55|NM|17508^URI^99MRC||0.0|/µL|0.0-14.0|N|||F
OBX|56|NM|17508-1^URI^99MRC||0.0|/HPF|0.0-8.4|N|||F
OBX|57|NM|17510^SPRM^99MRC||0.0|/µL|0.0-1.0|N|||F
OBX|58|NM|17510-1^SPRM^99MRC||0.0|/HPF|0.0-0.6|N|||F
OBX|59|NM|17529^MACRBC^99MRC||0.0|/µL||N|||F
OBX|60|NM|17530^MICRBC^99MRC||11.2|/µL||N|||F
OBX|61|NM|17531^ANNRBC^99MRC||3.4|/µL||N|||F
OBX|62|NM|17533^HPDRBC^99MRC||9.0|/µL||N|||F
OBX|63|NM|17534^JAGRBC^99MRC||0.0|/µL||N|||F
OBX|64|NM|17536^CRERBC^99MRC||0.0|/µL||N|||F
OBX|65|NM|17537^FRARBC^99MRC||0.0|/µL||N|||F
OBX|66|NM|17538^OABRBC^99MRC||3.4|/µL||N|||F
OBX|67|NM|16635^OTHER^99MRC||25.8|/µL||N|||F
OBX|68|NM|16635-1^OTHER^99MRC||15.5|/HPF||N|||F
OBX|69|NM|17539^MORINFRBC^99MRC||Dys RBC|||N|||F
OBX|70|NM|16630-2^POIKILOCYTE%^99MRC||87|%||N|||F

2.6.2 Sample Response Message

In synchronous communication of labXpert, each analysis result message need a response message which contains two segments: To send a correct response message, take into consideration that: the MSH-9 field should be ACK^R01 which indicates that it is a sample response message; If the value in the MSA-2 field is the same with the MSH-10 value of the received analysis result, it indicates that this response message is corresponding to the sent analysis result. The MSA-2 value in the following example is 4

MSH|^~\&|BC-6800|Mindray|||20140909160728||ACK^R01|5|P|2.3.1||||||UNICODE<CR>

MSA|AA|4<CR>

2.6.3 Bidirectional LIS/HIS Request Message

A 2-way LIS/HIS request message contains a sample ID. After the LIS/HIS received the request message, it will search for the corresponding patient and sample information to provide a response.

A request response message contains two segments: MSH and ORC. The MSH segment is almost the same with that of the analysis result message, except that the MSH-9 value is ORM^O01. The ORC-3 field should be filled with the receiver code (in this case, the sample ID; where in the following sample, it is SampleID1). Note that in the autoloading analysis, if there is a barcode scanning error while sending an inquiry message, the sample ID will be "Invalid".

An example of the request message is shown as follows:

MSH|^~\&|LabXpert|Mindray|||20081120174836||ORM^O01|4|P|2.3.1||||||UNICODE

ORC|AF||**SampleID1**|UR

SampleID1+UR represents sample ID + sample type.

Note: If UR test items are not added, OBX must be added for specifying the sample type.

OBX|6|IS|05007^Project Type^99MRC||UR||||||F

When the "LIS receiving samples by SN" function is enabled, except for the "sample ID + sample type", the sample tube position and a serial number (used for receiving samples) will also be written into the message.

MSH|^~\&|LabXpert|Mindray|||20140328102554||ORM^O01|2|P|2.3.1||||||UNICODE

ORC|AF||sampleid99|UR||2^3|13|||||||NW

See sections above for the fields of MSH and ORC segments.

2.6.4 2-Way LIS/HIS Request Response Message

When the LIS received an request message, it needs to send back an request response message. The first two message segments of the request response message are MSH and MSA. The MSH-9 message type field (indicating the type of the segment) is filled with ORR^O02, while the MSA segment should be filled up as shown in the

following example of the request response message. If the LIS/HIS gets searching results for the inquiry, there will be PID, PV1, ORC, OBR and OBX message segments after the two heading segments to provide the patient and sample information, in the same way as the sample data message does. The ORC segment is indispensable for an request response message with searching results, in which the ORC-1 value is AF, and ORC-3 is the key searching field(the sample ID). Note that the OBR-2 field indicates the sample ID, which should be the same as in the ORC-2 field; otherwise, the message will be regarded as incorrect.

An example of the request response message with searching results is shown as follows:

MSH|^~\&|LabXpert|Mindray|||20140909170111||ORR^O02||P|2.3.1|||||UNICODE

MSA|AA|1

PID|1||patientID2001^^^^MR||Jordan^Michael||20090210000000|M

PV1|1|Outpatient|Internal medicine^^1002|||||||||||||||Public

ORC|AF||SampleID4001|UR

OBR|1|SampleID4001||00001^Automated Count^99MRC||20090307103000||||Jack|||Virus infections|20090307103100|||||||||HM|||||||Bill

OBX|1|IS|08003^Test Mode^99MRC||CHEM+SEDIM |||||F

OBX|3|NM|30525-0^Age^LN||6|yr|||||F

OBX|4|ST|01001^Remark^99MRC||Emergency patient||||||F

OBX|5|ST|08005^SerialNumber^99MRC||3||||||F

OBX|6|IS|01007^Sample Type^99MRC||Venous blood||||||F

OBX|7|IS|01008^Patient Area^99MRC||A - 501||||||F

OBX|8|ST|01009^Custom patient info 1^99MRC||Nothing||||||F

OBX|9|ST|01010^Custom patient info 2^99MRC||Nothing||||||F

OBX|10|ST|01011^Custom patient info 3^99MRC||Nothing||||||F

Note: when the “Project Type” item in the response message is consistent with the “Project Type” item in the request message (see 2.5.7), this item (including “UR” of ORC and “Project Type” of OBX) can be excluded in the response message. If not, transmit the “Project Type” item as requested.

The OBX items “Blood Mode” and “Take Mode” are not mandatory in the response.

The OBX items “Test Mode”are mandatory.

The OBX item “SerialNumber” is the serial number in LIS, which is a mandatory field if a suggestion notice is needed when modifying Invalid sample ID.

In ORR message, out of matching purpose, MSA-2 must be the same with the inquired MSH-10, but it is not necessary that it is of the same with MSH-10 of the message itself.

An example of the inquiry response message with no search result is shown as follows, in which the MSA-2 field indicates the result of the response. In this example, the MSA-2 value is “AR”, indicating the inquiry was rejected; if it is “AE", then there is an error in the inquiry process.

MSH|^~\&|LabXpert|Mindray|||20140328102737||ORR^O02||P|2.3.1||||||UNICODE

MSA|AR|3

An example of "skip sample" is shown as follows, in which the MSA-2 field indicates the result of the response. In this example, the MSA-2 value is "AS", indicating the sample is skipped for analysis.

MSH|^~\&|LIS|LIS|||20191023164325||ORR^O02|2|P|2.3.1||||||UNICODE

MSA|AS|6||||

Appendix A. HL7 Protocol Overview

A.1 Grammar

A.1.1 Message Constructing Principles

Every HL7 message consists of several segments, each of which ends up with the <CR> (0x0D).

Each segment consists of the segment name of three characters and a number of fields, and each field consists of some components and subcomponents. For each message, the delimiters of the fields, components and subcomponents are defined in the MSH segment.

E.g.

MSH|^~\&|Mindray|LabXpert|||20060427194802||ORU^R01|1|P|2.3.1|||||UNICODE

among which:

The five characters following MSH define the delimiters used between fields, components and subcomponents. Although they can be any non-text characters, HL7 standard recommends you use the characters in the table below:

Table 9 HL7 Delimiters

Character	Meaning
|	Field delimiter
^	Component delimiter
&	Subcomponent delimiter
~	Repetition delimiter
\	ESC

The first two fields of MSH contains all the delimiters. Some fields behind are null because they are optional and not used by Mindray HL7 interface. Details about field definition and selection will be stated in the following sections.

For message of any type, the segments behind MSH appear in a fixed order. The order will be described in the following sections and the following grammar is used to organize the segments in proper order.

[] encloses optional segments.

{ } encloses segmetns which can repeat once or more.

A.1.2 Principles of Escape Character Conversion

For the field data of ST, TX, FT, and CF, etc. delimiters may be used in strings like remarks, clinical diagnosis and customized gender etc. When coding, the delimiters in the original strings shall be converted to escape sequence; which is restored in decoding. The principles for escape character conversion for BC-6800/BC-6600 HL7 interface are as follows:

ESC Sequence	Original Character
\F\	Field delimiter

ESC Sequence	Original Character
\S\	Component delimiter
\T\	Subcomponent delimiter
\R\	Repetition delimiter
\E\	Escape delimiter
\.br\	<CR>, segment end character.

Note: the "\" in the escapq sequence represents the ESC delimiter, whose value is defined in the MSH segment.

Appendix B. HL7 Data Type Definition

CE - Code Element

<identifier (ST)> ^ <text (ST)> ^ <name of coding system (ST)> ^ <alternate identifier (ST)> ^ <alternate text (ST)> ^ <name of alternate coding system (ST)>

CM - Composite

Format defined by the field.

CX - Extended composite ID with check digit

<ID (ST)> ^ <check digit (ST)> ^ <code identifying the check digit scheme employed (ID)> ^ < assigning authority (HD)> ^ <identifier type code (IS)> ^ < assigning facility (HD)>

ED – Encapsulate Data

<source application（HD）> ^ <type of data（ID）> ^ <data sub type（ID）> ^ <encoding（ID）> ^ <data（ST）>

EI - Entity Identifier

<entity identifier (ST)> ^ <namespace ID (IS)> ^ <universal ID (ST)> ^ <universal ID type (ID)>

FC – Financial Class

<financial class（IS）> ^ <effective date（TS）>

HD - Hierarchic designator

<namespace ID (IS)> ^ <universal ID (ST)> ^ <universal ID type (ID)>

Used only as part of EI and other data types.

FT - Formatted text

This data type is derived from the string data type by allowing the addition of embedded formatting instructions. These instructions are limited to those that are intrinsic and independent of the circumstances under which the field is being used.

IS - Coded value for user-defined tables

The value of such a field follows the formatting rules for an ST field except that it is drawn from a site-defined (or user-defined) table of legal values. There shall be an HL7 table number associated with IS data types.

ID - Coded values for HL7 tables

The value of such a field follows the formatting rules for an ST field except that it is drawn from a table of legal values. There shall be an HL7 table number associated with ID data types.

NM - Numeric

A number represented as a series of ASCII numeric characters consisting of an optional leading sign (+ or -), the digits and an optional decimal point.

PL - Person location

<point of care (IS)> ^ <room (IS)> ^ <bed (IS)> ^ <facility (HD)> ^ < location status (IS)> ^ <person location type (IS)> ^ <building (IS)> ^ <floor (IS)> ^ <location description (ST)>

PT - Processing type

<processing ID (ID)> ^ <processing mode (ID)>

SI - Sequence ID

A non-negative integer in the form of an NM field. The uses of this data type are defined in the chapters defining the segments and messages in which it appears.

ST – String

TS - Time stamp

YYYY[MM[DD[HHMM[SS[.S[S[S[S]]]]]]]][+/-ZZZZ] ^ <degree of precision>

XCN - Extended composite ID number and name

In Version 2.3, use instead of the CN data type. <ID number (ST)> ^ <family name (ST)> & <last_name_prefix (ST) ^ <given name (ST)> ^ <middle initial or name (ST)> ^ <suffix (e.g., JR or III) (ST)> ^ <prefix (e.g., DR) (ST)> ^ <degree (e.g., MD) (ST)> ^ <source table (IS)> ^ <assigning authority (HD)> ^ <name type code (ID)> ^ <identifier check digit (ST)> ^ <code identifying the check digit scheme employed (ID)> ^ <identifier type code (IS)> ^ <assigning facility (HD)> ^ <name representation code (ID)>

XPN - Extended person name

In Version 2.3, replaces the PN data type. <family name (ST)> ^ <given name (ST)> & <last_name_prefix (ST)> ^ <middle initial or name (ST)> ^ <suffix (e.g., JR or III) (ST)> ^ <prefix (e.g., DR) (ST)> ^ <degree (e.g., MD) (IS)> ^ <name type code (ID) > ^ <name representation code (ID)>

VID - Version identifier

<version ID (ID)> ^ <internationalization code (CE)> ^ <international version ID (CE)>

Appendix C. Message Coding Definition

In HL communication messages, the OBR-4 (Universal Serview ID) field, in the form of "ID^Name^EncodeSys", is used to identify the type of the analysis result (e.g. sample analysis result, microscopic examination result, QC result, etc.).Table 28 Table 10 lists all the codes of this field. lists all the codes of this field.

Table 10 OBR-4 and ASTM Message Type Codes

Data	Code (ID):	Name	EncodeSys	Comments
Sample Analysis Result	00001	Automated Count	99MRC	Urine In Use
Microscopic Exam Results	00002	Manual Count	99MRC	Urine Not use
LJ QCR	00003LJ QCR	LJ QCR	99MRC	Urine Not use
X QCR	00004	X QCR	99MRC	Urine Not use
XR QCR	00005	XR QCR	99MRC	Urine Not use
XR QCR	00006	XR QCR	99MRC	Urine Not use
X QCR Mean	00007	X QCR Mean	99MRC	Urine Not use
XR QCR Mean	00008	XR QCR Mean	99MRC	Urine Not use
XM QCR	00009	XM QCR	99MRC	Urine Not use
Worklist Request	00010	Worksheet Request	99MRC	Urine In Use
Worklist Response	00011	Worksheet Response	99MRC	Urine In Use

Each OBX segment contains information of one analysis parameter or non-parameter data item. It consists of the following fields: OBX-2, indicating the type of the HL7 data contained; OBX-3 (Observation Identifier), the identifier of the data in the form of "ID^Name^EncodeSys"; OBX-5, containing the value of the data; OBX-6, containing the unit for the parameter, (in the standard unit recommended by HL7). If some parameters need to transmit results of other units, it will expand the current ID to ID-1 as a new channel. For example, Squamous epithelial cell needs to transmit the results with dual units of /μLa nd /HPF.

OBX|29|NM|17504^SEC^99MRC||1.5|/μL|0.0-24.0|N|||F<0x0D>
OBX|29|NM|17504-1^SEC^99MRC||15|/HPF|0-240|N|||F<0x0D>

Table 29 Table 11 lists the HL7 type and code identifier of each communication data item. Table 29 Table 12 Lists all the units for parameters in the communication.

Table 11 Data Type and Coding System

Data	HL7 Type (OBX-2)	Code:	Name	EncodeSys	Example of OBX-3 fields
Other Data					
Sampling mode	IS	08001	Take Mode	99MRC	08001^Take Mode^99MRC
Sample Mode	IS	08002	Blood Mode	99MRC	08002^Blood Mode^99MRC
Test Panel	IS	08003	Test Mode	99MRC	08003^Test Mode^99MRC

Data	HL7 Type (OBX-2)	Code:	Name	EncodeSys	Example of OBX-3 fields
Age	NM	30525~-0	Age	LN	30525-0^Age^LN
Comments	ST	01001	Remark	99MRC	01001^Remark^99MRC
Reference group	IS	01002	Ref Group	99MRC	01002^Ref Group^99MRC
Re-exam flag	IS	01006	Re-exam flag	99MRC	01006^Recheck flag^99MRC
Sample type	IS	01007	Sample Type	99MRC	01007^Sample Type^99MRC
Inpatient zone	IS	01008	Patient Area	99MRC	01008^Patient Area^99MRC
Custom patient information 1	ST	01009	Custom patient info 1	99MRC	01009^Custom patient info 1^99MRC
Custom patient information 2	ST	01010	Custom patient info 2	99MRC	01010^Custom patient info 2^99MRC
Custom patient information 3	ST	01011	Custom patient info 3	99MRC	01011^Custom patient info 3^99MRC
Tube rack No.	ST	01012	Shelf No	99MRC	01012^Shelf No^99MRC
Tube No.	ST	01013	Tube No.	99MRC	01013^Tube No^99MRC
Report time	ST	01014	Report Time	99MRC	01014^Report Time^99MRC
Payer	ST	01015	Charger type	99MRC	01015^Charger type^99MRC
Patient Type	ST	01016	Patient type	99MRC	01016^Patient type^99MRC
Level of QC	IS	05001	QC Level	99MRC	05001^Qc Level^99MRC
QC time edited flag	IS	05002	QC test date modify flag	99MRC	05002^QC test date modify flag^99MRC
QC Time edited flag	IS	05003	QC test time modify flag	99MRC	05003^QC test time modify flag^99MRC
Expiration dates of the controls	ST	05004	Qc valid date	99MRC	05004^Qc valid date ^99MRC
To up QC files No.	ST	05005	Qc file No	99MRC	05005^Qc file No ^99MRC
Lot No. of control	ST	05006	QC lot No.	99MRC	05006^Qc lot No ^99MRC
Project type	ST	05007	Project type	99MRC	05007^Project Type^99MRC
Analyzer name	ST	09001	Analyzer	99MRC	09001^Analyzer^99MRC
Sample serial No.	ST	08005	SerialNumber	99MRC	08005^SerialNumber^99MRC

Data	HL7 Type (OBX-2)	Code:	Name	EncodeSys	Example of OBX-3 fields
Validation results	ST	09999	AuditResult	99MRC	09999^ AuditResult ^99MRC
Detailed information of validation rules	ST	09997	AuditMessages	99MRC	09997^ AuditMessages ^99MRC
LisTestID	ST	09998	LisTestID	99MRC	09998^ LisTestID ^99MRC
Instrument serial No.	ST	09003	SN	99MRC	09003^ SN ^99MRC
Dry Chemistry Result Data					
White blood cell	NM	16600	LEU	99MRC	16600^ LEU ^99MRC
Urobilinogen	NM	16601	URO	99MRC	16601^ URO ^99MRC
Microalbumin	NM	16602	mALB	99MRC	16602^ mALB ^99MRC
Protein	NM	16603	PRO	99MRC	16603^ PRO ^99MRC
Bilirubin	NM	16604	BIL	99MRC	16604^ BIL ^99MRC
Glucose	NM	16605	GLU	99MRC	16605^ GLU ^99MRC
Vitamin C	NM	16606	VITC	99MRC	16606^ VITC ^99MRC
Specific gravity (from test strips)	NM	17511	SG	99MRC	17511^ SG ^99MRC
Specific gravity (Refractometry method)	NM	17511	SGP	99MRC	17511^ SGP ^99MRC
Ketone	NM	16608	KET	99MRC	16608^ KET ^99MRC
Nitrite	NM	16609	NIT	99MRC	16609^ NIT ^99MRC
Creatinine	NM	16610	CRE	99MRC	16610^ CRE ^99MRC
pH	NM	16611	pH	99MRC	16611^ PH ^99MRC
Blood	NM	16612	BLD	99MRC	16612^ BLD ^99MRC
Calcium	NM	16613	CA	99MRC	16613^ CA ^99MRC
Color	NM	16614	COLOR	99MRC	16614^ COLOR ^99MRC
Protein/ Creatinine	NM	16615	PC	99MRC	16615^ PC ^99MRC
Microalbumin/ Creatinine	NM	16616	AC	99MRC	16616^ AC ^99MRC
Turbidity	NM	17500	TURB	99MRC	17500^ TURB ^99MRC
Formed Elements Result Data					
RBC/Red Blood Cell	NM	16617	RBCU	99MRC	16617^ RBCU ^99MRC

Data	HL7 Type (OBX-2)	Code:	Name	EncodeSys	Example of OBX-3 fields
RBC/Normocyte	NM	16629~1	NORMOCYTE#	99MRC	16629-1^ NORMOCYTE# ^99MRC
Abnormal red blood cell ratio	NM	16630~2	POIKILOCYTE%	99MRC	16630-2^ POIKILOCYTE% ^99MRC
Macrocyte	NM	17529	MACRBC	99MRC	17529^ MACRBC ^99MRC
Microcyte	NM	17530	MICRBC	99MRC	17530^ MICRBC ^99MRC
Annular cells/Annular Red Blood Cell	NM	17531	ANNRBC	99MRC	17531^ ANNRBC ^99MRC
Acanthocyte	NM	17532	ACARBC	99MRC	17532^ ACARBC ^99MRC
Humped spherocyte	NM	17533	HPDRBC	99MRC	17533^ HPDRBC ^99MRC
Jagged cells/Jagged Red Blood Cell	NM	17534	JAGRBC	99MRC	17534^ JAGRBC ^99MRC
Ghosr cells/Ghost Red Blood Cell	NM	17535	GHORBC	99MRC	17535^ GHORBC ^99MRC
Crenocyte	NM	17536	CRERBC	99MRC	17536^ CRERBC ^99MRC
Fragmented cells/Fragmented Red Blood Cell	NM	17537	FRARBC	99MRC	17537^ FRARBC ^99MRC
Other abnormal red blood cell	NM	17538	OABRBC	99MRC	17538^ OABRBC ^99MRC
Morphology information of red blood cells/Information of Red Blood Cell Morphology	NM	17539	MORINFRBC	99MRC	17539^ MORINFRBC ^99MRC
White blood cell	NM	16618	WBCU	99MRC	16618^ WBCU ^99MRC
Phagocyte	NM	17540	PHA	99MRC	17540^PHA^99MRC
White blood cell clump	NM	16619	WBCC	99MRC	16619^ WBCC ^99MRC

Data	HL7 Type (OBX-2)	Code:	Name	EncodeSys	Example of OBX-3 fields
Squamous epithelial cell	NM	17504	SEC	99MRC	17504^ SEC ^99MRC
Clue Cell	NM	17557	CLUC	99MRC	17557^CLUC^99MRC
Non-squamous epithelial cell	NM	17505	NEC	99MRC	17505^ NEC ^99MRC
Urothelial Cell	NM	17541	UEC	99MRC	17541^UEC^99MRC
Renal Tubular Epithelial Cell	NM	17542	RTEC	99MRC	17542^RTEC^99MRC
Other Epithelial Cell	NM	17543	OEC	99MRC	17543^OEC^99MRC
Decoy Cell	NM	17544	DEC	99MRC	17544^DEC^99MRC
Atypical Urothelial Cell	NM	17545	Atyp.C	99MRC	17545^Atyp.C^99MRC
Crystal	NM	16624	CRYS	99MRC	16624^ CRYS ^99MRC
Mono-hydrate calcium oxalate crystal	NM	17506	CAOXM	99MRC	17506^ CAOXM ^99MRC
Di-hydrate calcium oxalate crystal	NM	17507	CAOXD	99MRC	17507^ CAOXD ^99MRC
Uric acid crystal	NM	17508	URI	99MRC	17508^ URI ^99MRC
Triple phosphate crystal	NM	17509	TRI	99MRC	17509^ TRI ^99MRC
Sodium Urate Crystal	NM	17546	SUCR	99MRC	17546^SUCR^99MRC
Calcium Phosphate Crystal	NM	17547	CPCR	99MRC	17547^CPCR^99MRC
Amorphous Salt Crystal	NM	17548	ASCR	99MRC	17548^ASCR^99MRC
Hyaline cast	NM	16625	HYAC	99MRC	16625^ HYAC ^99MRC

Data	HL7 Type (OBX-2)	Code:	Name	EncodeSys	Example of OBX-3 fields
Unclassified cast	NM	16626	UNCC	99MRC	16626^ UNCC ^99MRC
Granular Cast	NM	17549	GRAC	99MRC	17549^GRAC^99MRC
Cellular Cast	NM	17550	CELC	99MRC	17550^CELC^99MRC
Waxy Cast	NM	17551	WAXC	99MRC	17551^WAXC^99MRC
Blood Cast	NM	17552	BLDC	99MRC	17552^BLDC^99MRC
Other Unclassified Cast	NM	17553	OUNCC	99MRC	17553^OUNCC^99MRC
Crystal Cast	NM	17554	CRYC	99MRC	17554^CRYC^99MRC
Muddy Brown Cast	NM	17555	MUBC	99MRC	17555^MUBC^99MRC
Bacteria	NM	16620	BACT	99MRC	16620^ BACT ^99MRC
Coccus/Cocci	NM	17502	BACTC	99MRC	17502^ BACTC ^99MRC
Rod/Bacillus	NM	17503	BACTR	99MRC	17503^ BACTR ^99MRC
Yeast	NM	17501	YST	99MRC	17501^ YST ^99MRC
Yeast	NM	17501	YSTU	99MRC	17501^ YSTU ^99MRC
Mucous Strand	NM	16627	MUC	99MRC	16627^ MUC ^99MRC
Sperm	NM	17510	SPRM	99MRC	17510^ SPRM ^99MRC
Trichomonas vaginalis	NM	17556	TV	99MRC	17556^TV^99MRC
Other	NM	16635	OTHER	99MRC	16635^ OTHER ^99MRC
Epithelial Cell	NM	16622	EC	99MRC	16622^ EC ^99MRC
Small Round Cell	NM	16623	SRC	99MRC	16623^ SRC ^99MRC
Formed element image transmission					
RBC phase scattergram 1	ST	17000~1	UrineScattergram-1	99MRC	17000-1^UrineScattergram-1^99MRC
RBC phase scattergram 2	ST	17000~2	UrineScattergram-2	99MRC	17000-2^UrineScattergram-2^99MRC
RBC phase histogram 1	ST	17001~1	UrineHistogram-1	99MRC	17001-1^UrineHistogram-1^99MRC
RBC phase histogram 2	ST	17001~2	UrineHistogram-2	99MRC	17001-2^UrineHistogram-2^99MRC
RBC phase histogram 3	ST	17001~3	UrineHistogram-3	99MRC	17001-3^UrineHistogram-3^99MRC

Data	HL7 Type (OBX-2)	Code:	Name	EncodeSys	Example of OBX-3 fields
Real image 1	ST	17002~1	UrineScopeGraph-1	99MRC	17002-1^UrineScopeGraph-1^99MRC
Real image 2	ST	17002~2	UrineScopeGraph-2	99MRC	17002-2^UrineScopeGraph-2^99MRC
Real image 3	ST	17002~3	UrineScopeGraph-3	99MRC	17002-3^UrineScopeGraph-3^99MRC

Table 12 Parameter Units in Communication

Parameter Units in Software	Parameter Units in Communication (OBX-6)
/μL	/μL
/HPF	/HPF
/LPF	/LPF
mL/L	mg/mmol
mg/g	mg/g
/nL	mg/L
/pL	mmol/L
g/L	Ery/μL
g/dL	mg/dL
Leu/μL	Leu/μL
μmol/L	μmol/L
g/L	g/L
%	%
year (age unit)	yr
month(age unit)	mo
day (age unit)	d
hour (age unit)	hr
week (age unit)	wk

Some OBX messages uses custom enumeration values. See Table 31 Table 13 for the meaning of the values.

Table 13 HL7 and ASTM Enumeration Definitions

Data	Value Enumeration
Take Mode	Value enumeration: “O” - open-vial “A” - autoloading “C” – closed-tube
Blood Mode	Value enumeration: “W”- whole blood “P” - predilute "B": Body fluid “Q” – quality control
Test Mode	Value enumeration:

Data	Value Enumeration
	Can be one of the following modes, or any combination of the modes: "CHEM": Chemistry "SEDIM": Formed element "CHEM+ SEDIM": Chemsitry+Formed element
Project Type	"UR": Urine "BL" : Blood "BF": Body fluid
Gender	"M"/"m": Male "F"/"f": Female "U"/"u": Unknown Other content: Used as displaying character strings

For formed element image data: the histograms can be transmitted in the following ways based on the software configuration:

(1) do not transmit histogram data

(2)Transmitted as binary data. The data type field of OBX segment is "ED", and the data field is in the form of "^Image^JPEG^Base64^……image data……", where "Image" is the image data, "JPEG" is the self-definied sub-data type, indicating the transmission of JPEG type phase, and "Base64" is the way of coding the bitmap data. BMP and PNG are other available options for transmission data formats.

OBX|57|ED|17000-1^UrineScattergram-1^99MRC||^Image^JPEG^Base64^...data...|||||F

OBX|58|ED|17000-2^UrineScattergram-2^99MRC||^Image^JPEG^Base64^...data...|||||F

OBX|59|ED|17001-1^UrineHistogram-1^99MRC||^Image^JPEG^Base64^...data...|||||F

OBX|60|ED|17001-2^UrineHistogram-2^99MRC||^Image^JPEG^Base64^...data...|||||F

OBX|61|ED|17001-3^UrineHistogram-3^99MRC||^Image^JPEG^Base64^...data...|||||F

OBX|62|ED|17002-1^UrineScopeGraph-1^99MRC||^Image^JPEG^Base64^...data...|||||F

OBX|63|ED|17002-2^UrineScopeGraph-2^99MRC||^Image^JPEG^Base64^...data...|||||F

OBX|64|ED|17002-3^UrineScopeGraph-3^99MRC||^Image^JPEG^Base64^...data...|||||F

(3)Transmit as picture's path. The data type field of OBX segment is "ST" where the "path\PhaseSizeShape.jpg" indicates the location of the image in the PC.

OBX|57|ST|17000-1^UrineScattergram-1^99MRC||path\PhaseSizeShape.jpg|||||F<CR>

OBX|58|ST|17000-2^UrineScattergram-2^99MRC||path\PhaseSizeColor.jpg|||||F<CR>

OBX|59|ST|17001-1^UrineHistogram-1^99MRC||path\PhaseSize.jpg|||||F<CR>

OBX|60|ST|17001-2^UrineHistogram-2^99MRC||path\PhaseShape.jpg|||||F<CR>

OBX|61|ST|17001-3^UrineHistogram-3^99MRC||path\PhaseColor.jpg|||||F<CR>

OBX|62|ST|17002-1^UrineScopeGraph-1^99MRC||path\32.jpg|||||F<CR>

OBX|63|ST|17002-2^UrineScopeGraph-2^99MRC||path\47.jpg|||||F<CR>

OBX|64|ST|17002-3^UrineScopeGraph-3^99MRC||path\51.jpg|||||F<CR>

Communication of patient age: the age of the patient is transmitted in an OBX segment which contains an integer and a unit. The age could be “<1” day (same as the labXpert UI).

Appendix D. Base64 Encoding Process

1. Select the 3 adjacent bytes (i.e. 24 bit) from the data stream to be encoded; from left to right, divide them into 4 6-bit groups; and then, the ASCII string is obtained by mapping based on Table 31 Table 14below. See below:

Raw data: 15H A3H 4BH

Binary data 00010101 10100011 01001011

6-bit groups obtained after dividing 000101 011010 001101 001011

Corresponding codes 5H 1AH 0DH 0BH

Corresponding characters F a N L

Table 14 Base 64 Mapping

Value/Code	Value/Code	Value/Code	Value/Code
0A	17 R	34 I	51 z
1 B	18 S	35 j	52 0
2 C	19 T	36 k	53 1
3 D	20 U	37 l	54 2
4 E	21V	38m	55 3
5 F	22W	39 n	56 4
6 G	23 X	40 o	57 5
7 H	24 Y	41 p	58 6
8 I	25 Z	42 q	59 7
9 J	26 a	43 r	60 8
10 K	27 b	44 s	61 9
11 L	28 c	45t	62+
12 M	29 d	46 u	63 /
13 N	30 e	47 v	
14 0	31 f	48 w	(pad) =
15 P	32 g	49 x	
16 Q	33 h	50 y	

(2)Repeat step 1 continuously till the whole data stream is encoded.

When the data left is less than 3 bytes, 0 is added to the right to complement. If the 6-bit groups obtained is composed of the complement bit (0) only, then it is mapped to the "=" character. When there is the last one byte left, there will be two "=" characters in the obtained coding string; when two bytes are left, then the obtained coding string consists of one "=" character. See the two examples below:

① Raw data 0AH

00001010

Data obtained after complementing 00001010 00000000 00000000

6-bit groups obtained after dividing 000010 100000 000000 000000

Corresponding codes 02H 20H 00H 00H

Corresponding characters C g = =

② Raw data 0AH 0BH

00001010 00001011

Data obtained after complementing 00001010 00001011 00000000

6-bit groups obtained after dividing 000010 100000 101100 000000

Corresponding codes 02H 20H 2CH 00H

Corresponding characters C g s =

Appendix E. Communication Log

To track the problems related to LIS and to apply 1-way/2-way LIS, the communication log function is added to the labXpert, which includes: data sent and received by the labXpert, the information of communication processes, communication errors and abnormalities.

The format of the log is shown in the figure below:

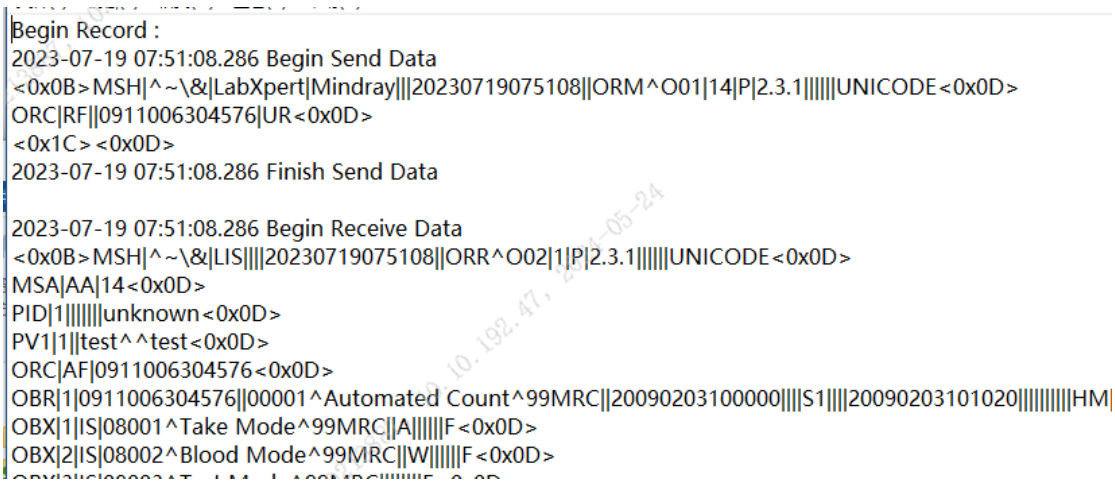

The log is saved in the data folder under the installation directory of the labXpert. For example, if the data folder path is: D:\LabXpertServerData. The communication folder path is: D:\LabXpertServerData\Log\LisLog, and the file name is formated as 20200519175621_Blood_202005190339.txt. Each day has a folder, each sample has a txt file. The log files of the latest 10 days are saved. Note: LabXpertServerData is a hidden folder, it can be found after choosing “Show hidden files, folders, and drives” in your computer.

Appendix F. Communication Setup

1、 LIS Communication Setup

When a laboratory is connected to LIS, set up the network connection based on the actual situation. Before connecting to LIS, make sure that the computer where the software is installed is connected to the network that have access to the LIS. See below for setting description:

1) Select “System Setup” > “Normal Setup” > “Comm. Setup” to switch to the “Comm. Setup” screen.

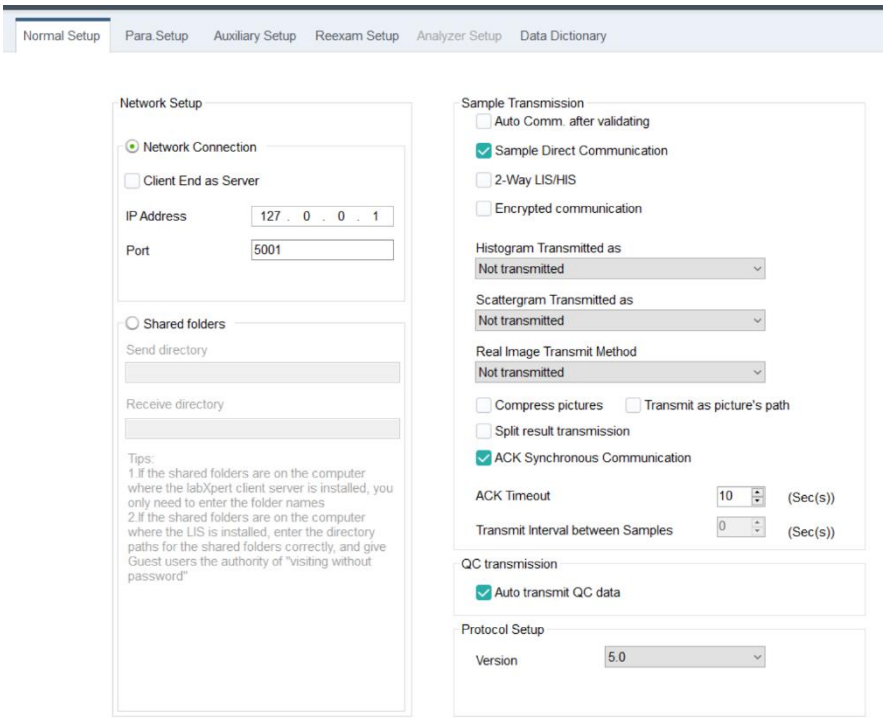

Figure 6 Communication Settings

2) Configure LIS network settings based on the actual situation of laboratory network connection, and select “**Network Connection**” or “**Shared folders**”. When you choose to use “Network Connection”, you need to specify the client as a server or use the LIS as a server.

- When you choose to use the labXpert as server, select “labXpert Server” and enter the port number (i.e. the port number of the computer that the software is installed).

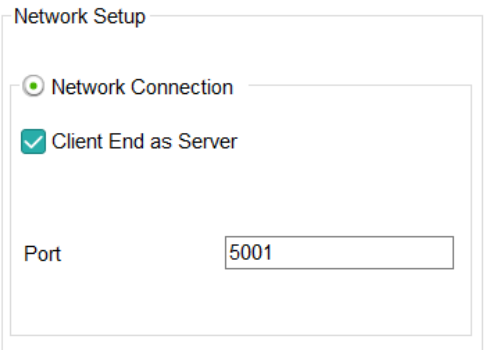

Figure 7 Network connection settings

- When you choose to use LIS as the server, do not select “labXpert as Server”. Enter IP address (IP address of computer on which LIS is installed) and port number (port number of computer on which LIS is installed).

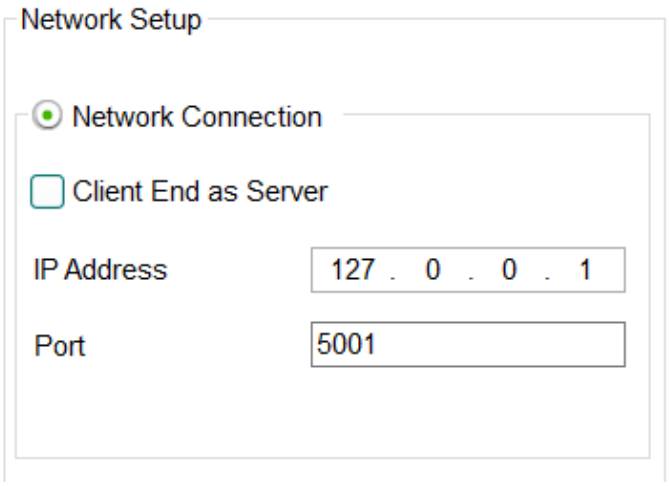

Figure 8 Network connection settings

- When you choose to use “Shared folders”, specifiy the address of “Send directory” and “labXpert to receive (orders)”.



Figure 9 Shared folders

If the folders are located on a PC that serves as the labXpert server, the folders are set as follows:

Folder name	Note
Cal2Lis	3、 Used to store the results files sent from labXpert to the LIS. 4、 The path for the LIS to read results is \\IP address of the PC installed with labXpert server\Cal2Lis
Lis2Cal	3、 Used to store the sample reception work orders related to the labXpert only. 4、 The path for the LIS to write the work orders is \\IP address of the PC installed with labXpert server\Cal2Lis

Cal2Lis and LisCal are used for examples for the naming of shared holders only. Users may define their own namings of the folders.

If the folders are located on a PC that is not served as the labXpert server, the folders are set as follows:

Folder name	Note
\\IPaddress\Cal2Lis	Used to store the results files sent from labXpert to the LIS.
\\IPaddress \Lis2Cal	Used to store the sample reception work orders related to the labXpert only.

The IP address here refers to the IP address of the PC where the shared folders are located, and can also be set to the host name.

3) Set up the applicable LIS protocol version based on the actual situation of the laboratory.

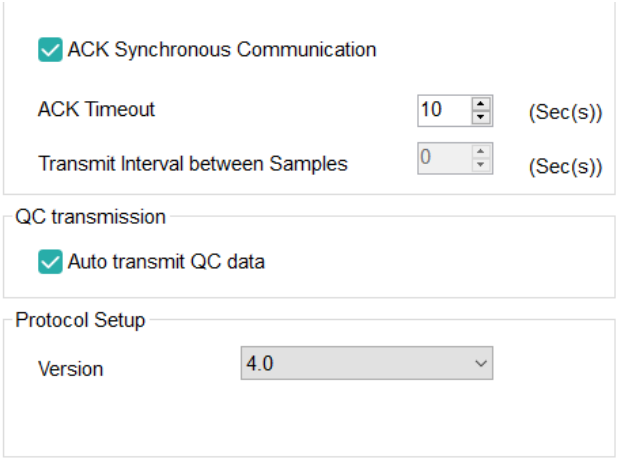

Table 10 LIS 协议版本

Options	Note	Comments
Version	Protocol Version	
Coding	Select the coding format for message communication	UTF-8 and LOCAL are the two options.
ACK Synchronous Communication	When "ACK Synchronous Communication" is selected, when labXpert sends the result, it will wait for LIS to return the result confirmation message before sending the next message.	If "ACK Synchronous Communication" is selected, when LIS does not respond to ACK as required, labXpert may determine the sending failed and cause UI severely lagged. The lg time is relevant to the time of ACK timeout. Do not select this option when it is not sure whether LIS will respond to ACK.
ACK Timeout	"ACK Timeout" refers to the time for the software to wait for the LIS to return a confirmation message. When the LIS confirmation message is not received within the set time range, the software then sends the next result.	Allowed time range: [0-600] seconds.

After the connection, the corresponding LIS indicator on the software status bar is on.

2、 Setting Sample Transmission Methods

Set up the methods and information of sample transmission to LIS.

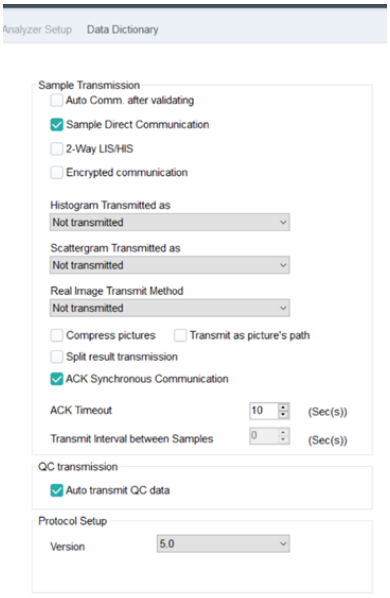

Figure 11 Sample transmission methods setting

Options	Note	Comments
Auto Comm. after validating	When “Auto Comm. after validating” is enabled, the system automatically transmit validated sample results to LIS	
Sample Direct Communication	To enable or disable the function of “Sample Direct Communication”> When “Sample Direct Communication“ is enabled, the software communicates all sample results, validated or not validated, to LIS in real time. When “Sample Direct Communication“ is not enabled, the system only communicates□ validated sample results to LIS.	Suspicious samples will not be transmitted
2-Way LIS/HIS	When 2-Way LIS/HIS is used in the laboratory, check the check box for “2-Way LIS/HIS“. When you are using the 2-Way LIS/HIS, the software automatically inquires information from the LIS/HIS. You do not need to enter Sample ID or rack No. (available only for sample processing system products). If DMU is connected to LIS, but the option is not selected, DMU sends sample results to LIS, but will not inquire information from LIS.	
Encrypted Communication	The function is deselected by default and it only works on shared folders. After selction, it will encrypt the sending data and decrypt the received mesaage.	Do not select this function when LIS does not have a decryption steps.
Histogram Transmitted as	Select from the pull-down list: Not transmitted	N/A

Options	Note	Comments
	In BMP bitmap In PNG bitmap In JPG bitmap	
Scattergram transmitted as	Select from the pull-down list: Not transmitted In BMP bitmap In PNG bitmap In JPG bitmap	N/A
Real image transmitted as	Select from the pull-down list: Not transmitted In BMP bitmap In PNG bitmap In JPG bitmap	N/A
Compressing images	Select to compress the image's size and resolution ratio	
Transmit as picture's path	The software transmits the picture's path to LIS, and LIS read the images in the form of their paths.	
Split result transmission	When "Split result transmission" is enabled, the dry chemistry and sediment results are transmitted in two messages, each message includes the machine name and serial number of the current sample (Note: This function is applicable to EU 8600 and EU8600GT, but not to EU-5300Pro and EU-5600Pro).	When this function is enabled, the user will be able to know which analyzer the dry chemistry or formed element result comes from in the LIS software.

3、 QC Transmission Setup

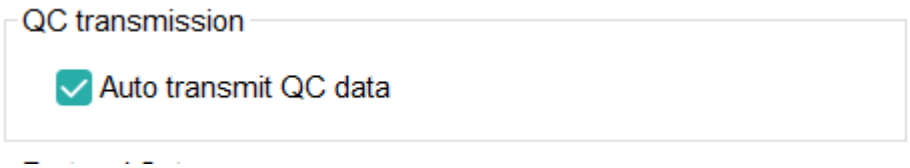

Figure 12 QC transmission setup

After selecting "Auto transmit QC data", the QC results will be transmitted automatically to LIS after QC sample analysis. The function is selected by default.

Appendix G. Enable the Guest Account

Windows 7 or Windows 8

1、 Open the control panel, and choose User Accounts.

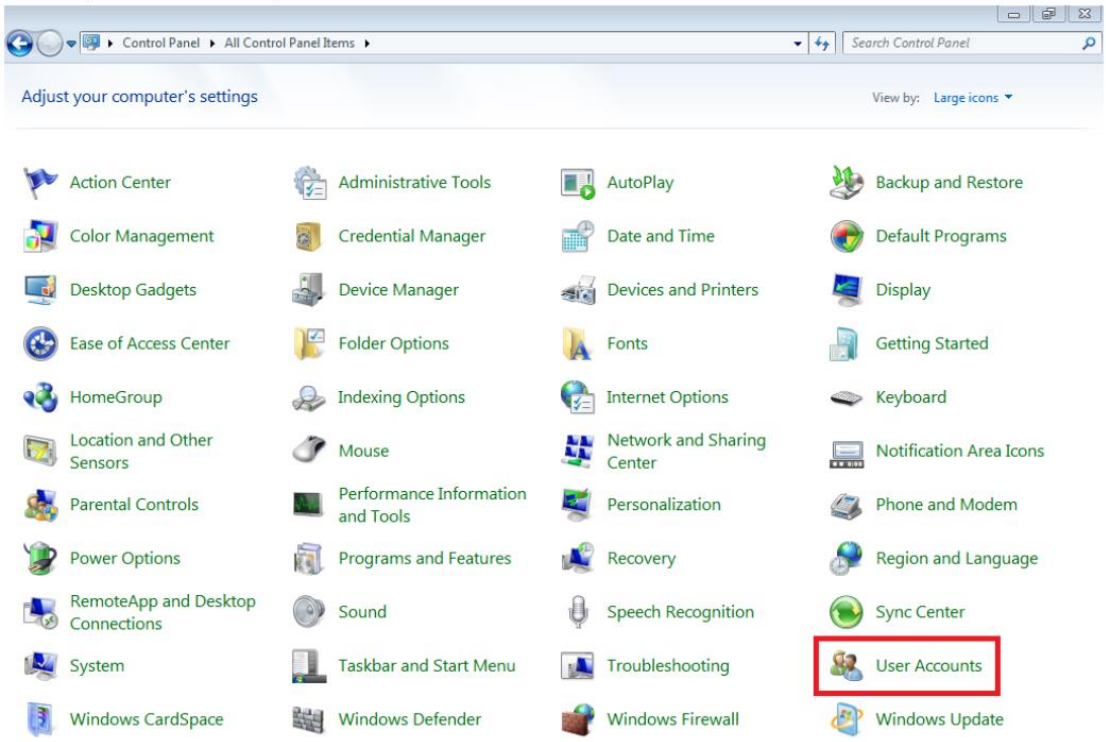

Figure 13 Win7、Win8 control panel

2、 Select “Manage another account”.

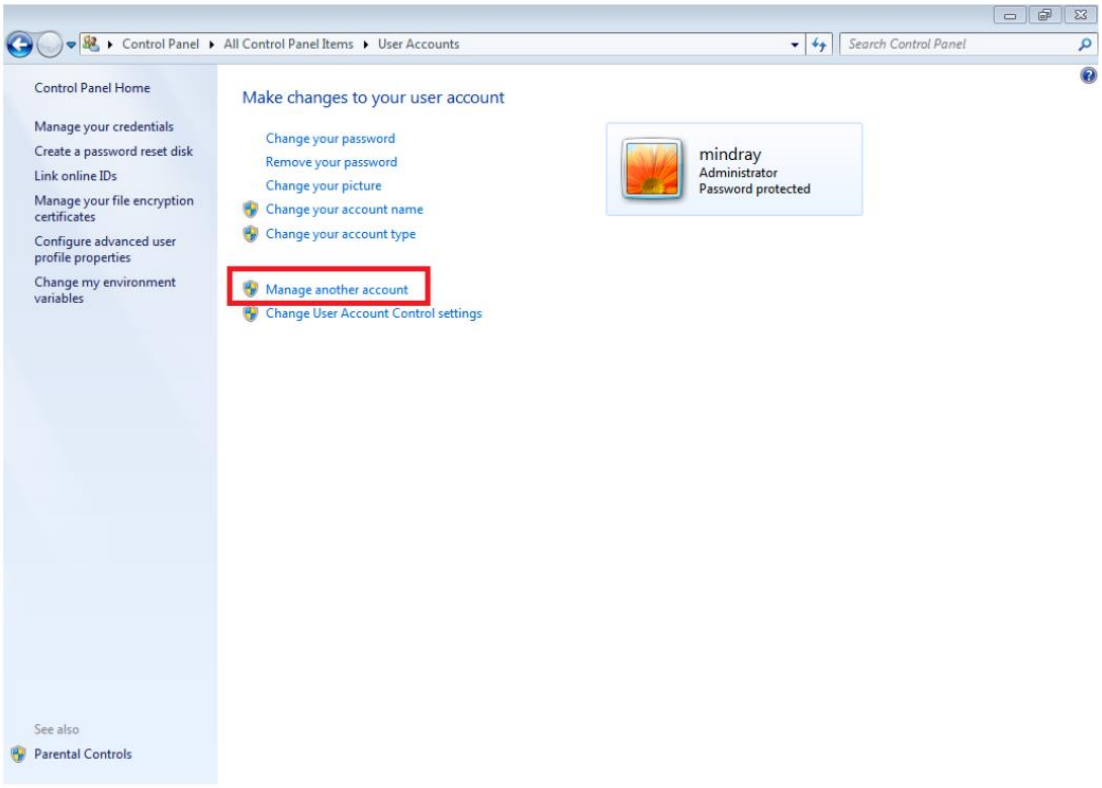

Figure 14 account management

3、 Select “Guest”.

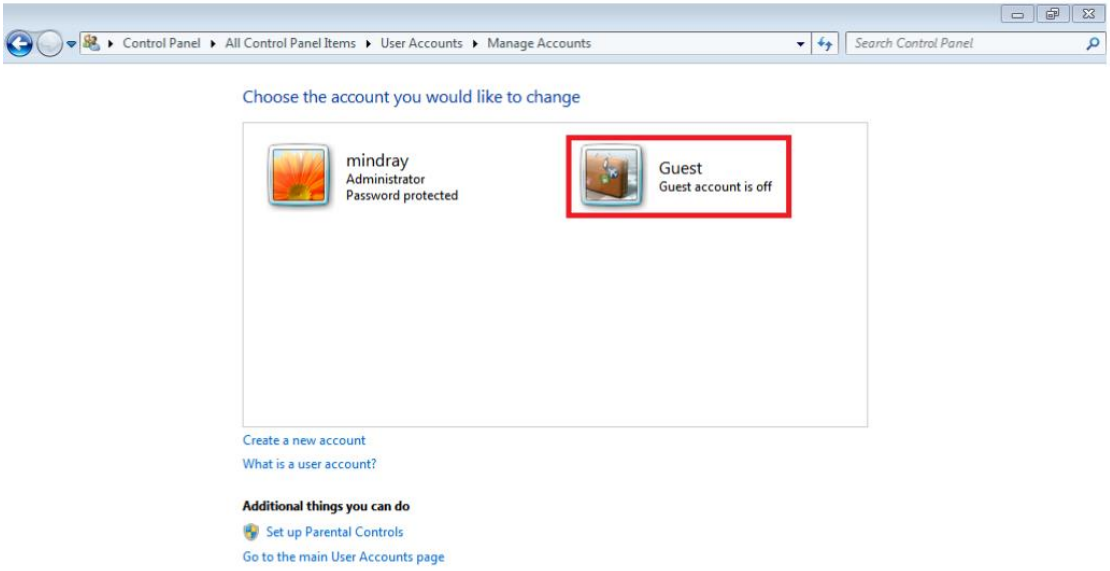

Figure 15 Click guest

4、 Select “Turn On”.

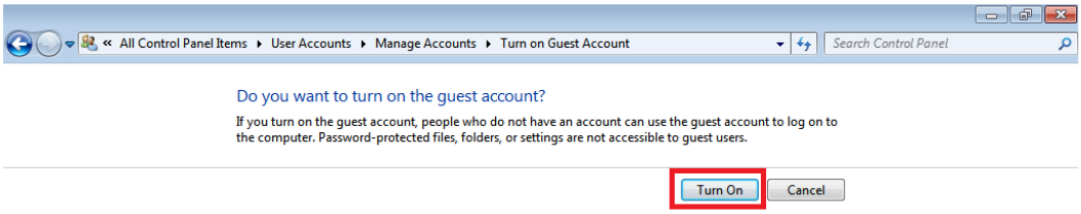

Figure 16 Enable guest account

By now, the Guest account is activated.

Turn off the password sharing

1、 On the control panel, click Network and Sharing Center, and then click Change advanced sharing settings.

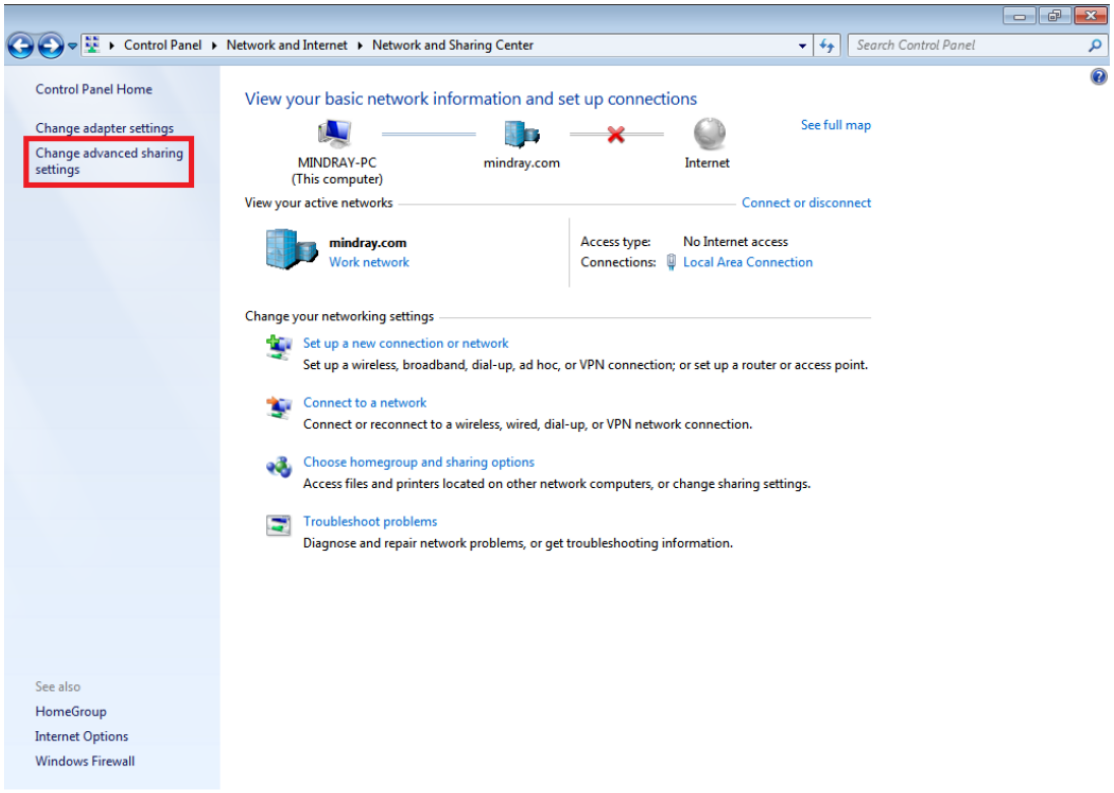

Figure 17 Advanced sharing settings

2、 Expand the Public profile.

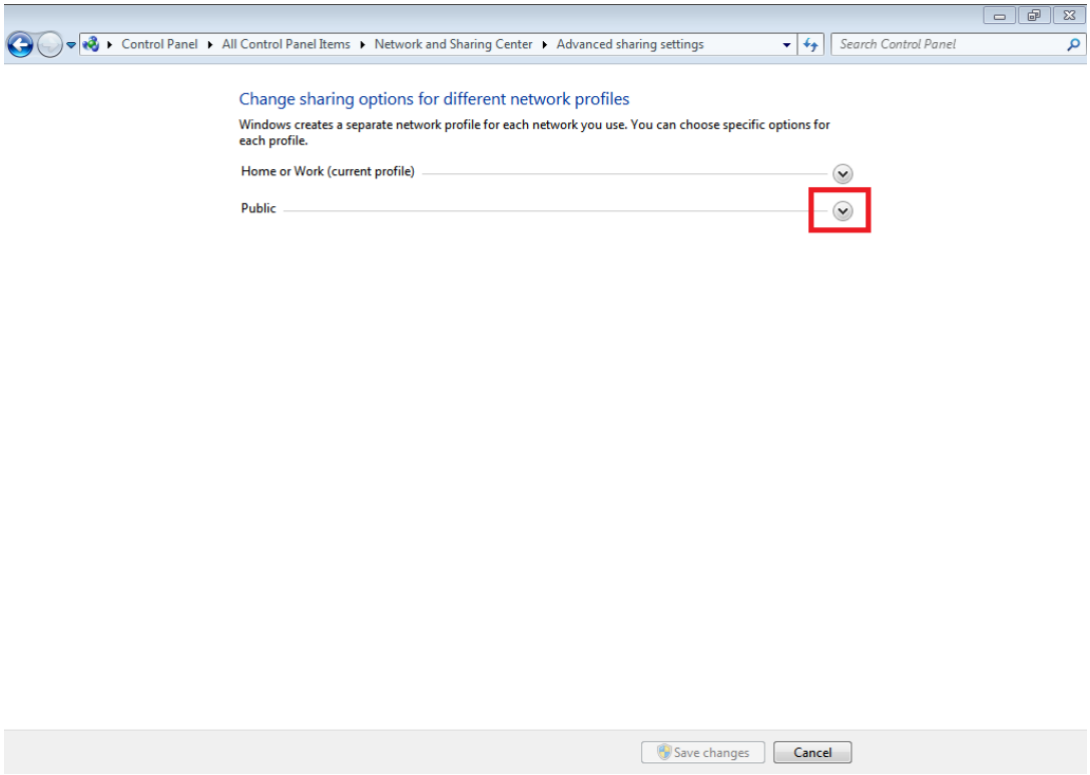

Figure 18 Advanced sharing settings-public

3、 Select “Turn off password protected sharing”, and select “Save Changes”.

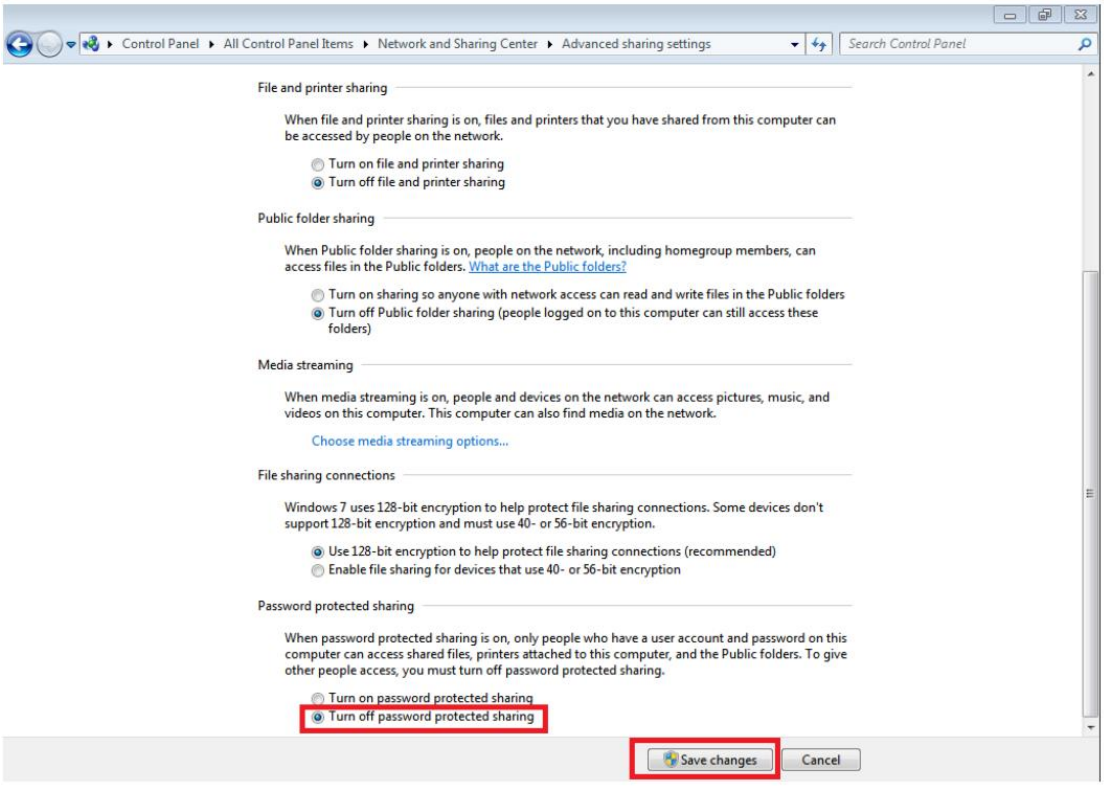

19 Save change of turning off password protected sharing

Windows 10

1、 Select the Start button in the lower left corner of the task bar, and enter "cmd" in the search box. Right-click the searched command, and select "Run as administrator".

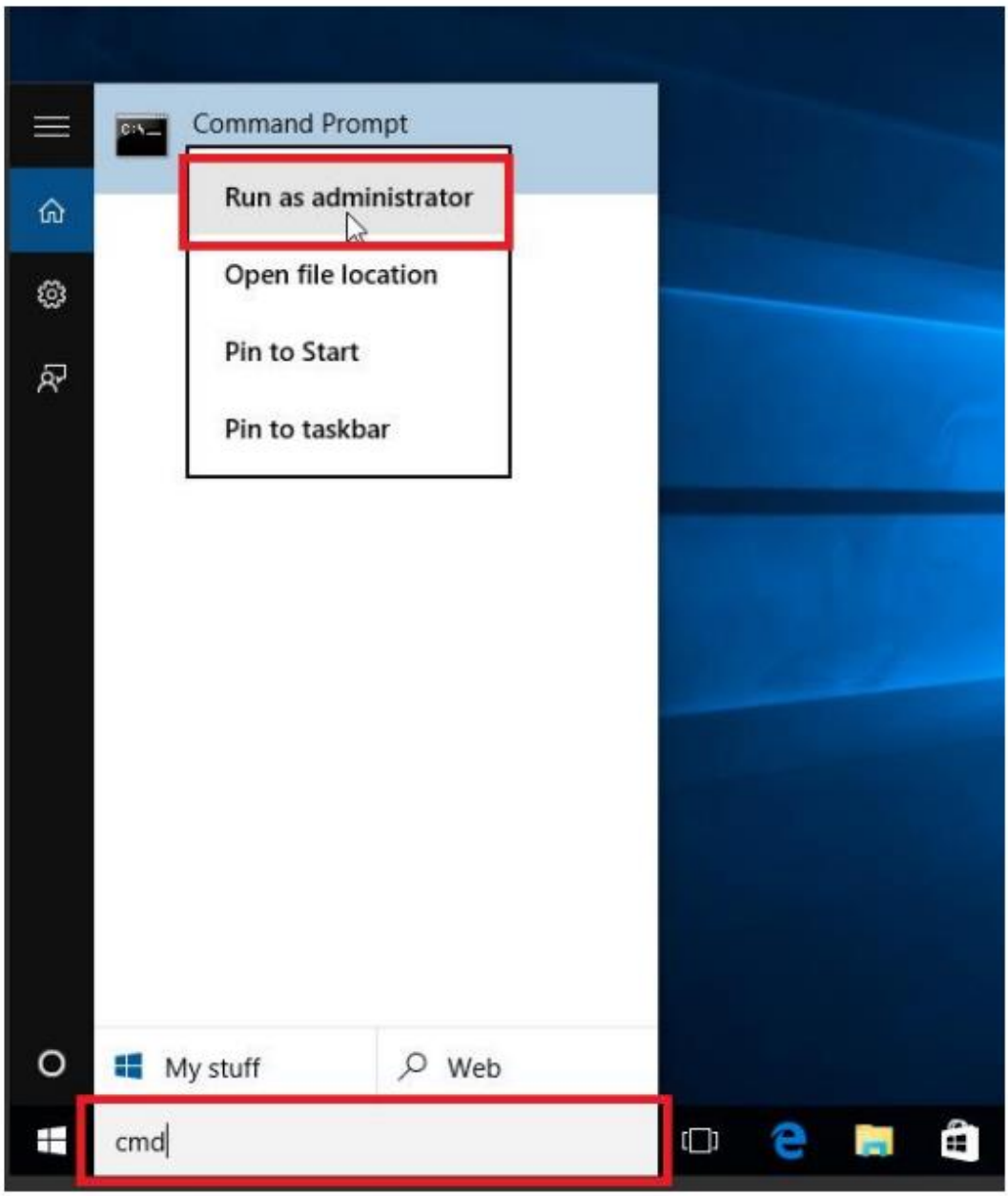

Figure 20 Run as administrator in Win10

2、 At the command prompt, enter "net user guest /active:yes" to activate the Guest account.

3、 At the command prompt, enter "net user guest “”" to clear the password of the Guest account.

4、 Turn off the network password. For details about the method, see the previous description about "Turn off the password sharing" in the Windows 7 or Windows 8 system.

Appendix H. JSON Standard

Refer to RFC4627.

Appendix I. Tables and Figures

Figure 1 Communication Settings 5
Figure 2 Result transmission by shared folders 6
Figure 3 Receive work orders by shared folders 7
Figure 4Analysis results, QC data communication process 10
Figure 5 Worklist request communication process 10
Figure 6 Communication Settings 44
Figure 7 Network connection settings 44
Figure 8 Network connection settings 45
Figure 9 Shared folders 45
Table 10 LIS Protocol Version 46
Figure 11 Sample transmission methods setting 47
Figure 12 QC transmission setup 48
Figure 13 Win7、Win8 control panel 49
Figure 14 account management 50
Figure 15 Click guest 50
Figure 16 Enable guest account 51
Figure 17 Advanced sharing settings 51
Figure 18 Advanced sharing settings-public 52
19 Save change of turning off password protected sharing 52
Figure 20 Run as administrator in Win10 53

Table 1 MSH Field Definitions 12
Table 2 MSA Field Definitions 13
Table 3 Error Codes of MSA-6 Field 13
Table 4 PID Field Definitions 14
Table 5 PV1 Field Definitions 15
Table 6 OBR Field Definitions 16
Table 7 OBX Field Definitions 17
Table 8 ORC Field Definitions 19
Table 9 HL7 Delimiters 29
Table 10 OBR-4 and ASTM Message Type Codes 33
Table 11 Data Type and Coding System 33
Table 12 Parameter Units in Communication 39
Table 13 HL7 and ASTM Enumeration Definitions 39
Table 14 Base 64 Mapping 42