EasyLyte®

Operator's Manual

Na/K
Na/K/Cl
Na/K/Li
Na/K/Ca/pH

analyzers

CE

MEDICA

Flow Chart

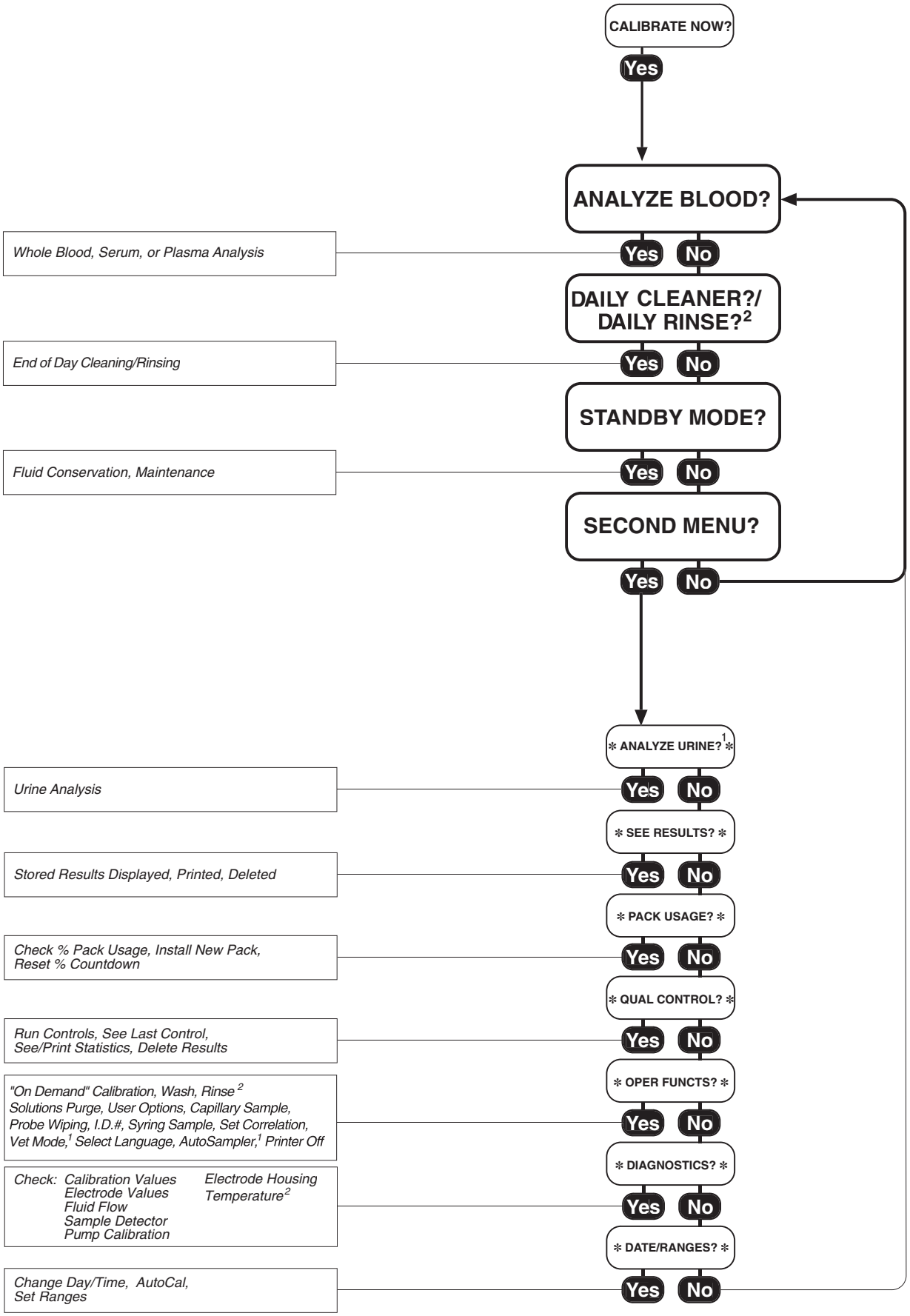

1 Not available for Na/K/Ca/pH analyzer
2 Na/K/Ca/pH only

MEDICA EasyLyte®

Operator's Manual

REF 2277
001494-901R6, 2003-06

©2003 Medica Corporation (all rights reserved)

No part of this manual or the products it describes may be reproduced by any member or in any form without prior consent in writing from Medica Corporation.

The Medica EasyLyte analyzer is for In Vitro Diagnostic Use.

Medica Corporation, 5 Oak Park Drive
Bedford, MA 01730-1413 USA

EC REP Emergo Europe, Molenstraat 15
NL-2513 BH The Hague, The Netherlands

The information in this manual was correct at the time of printing. However, Medica Corporation continues to improve products and reserves the right to change the specifications, equipment, and maintenance procedures at any time without notice.
If the system is used in a manner differently than specified by Medica Corporation, the protection provided by the equipment may be impaired. See warnings and hazard statements.

Preface

This Operator's Manual will assist you in using the EasyLyte analyzer. Easy-to-follow instructions guide you through analyzer setup and operation. Display messages and flow charts are combined with the written instructions for quick reference.

Symbols used throughout the manual

▲ Important information

★ Conditions which may cause data loss or analyzer malfunction

 Biohazard warning

 Not available for Na/K/Ca/pH analyzer

 Not available for Na/K/Li analyzer

Preface

1 Understanding the EasyLyte Analyzer

Intended Use 4
Summary and Explanation 4
Operational Hazards and Precautions 6

2 Analyzer Installation

Unpacking 10
Component Installation/Replacement 10
Analyzer Disassembly 23
Power Up 24
Printer Setup 25
Computer Connection 28

3 Operating the Analyzer

Calibrate Now? 29
Analyze Blood? 30
Daily Cleaner?/Daily Rinse? 32
Standby Mode? 33
Second Menu? 34
Analyze Urine? 35
See Results? 37
Pack Usage? 38
Quality Control? 41
Operator Functions? 43
Diagnostics? 51
Date/Ranges? 54

4 Sample Handling and Collection

Whole Blood 57
Serum 57
Plasma 58
Syringe Sampling 58

5 Maintenance

. 60

6 Storage

. 61

7 Principles of Operation

ISE theory 63
Electrode Measurement Diagram 65

8 Specifications

Na/K, Na/K/Cl, Na/K/Li 66
Na/K/Ca/pH 67

9 Troubleshooting and Performance Verification

Introduction 68
Flow Problems 72
Membrane Assembly 74
Electrodes 75
Solutions Pack 78
Sample Detector 81
Solutions Valve 81
Printer 82
Electromechanical 82
Performance Verification 83

10 Automated Sampling 86

11 Display Messages 104

Appendices

Appendix A: Consumables 115
Appendix B: Warranty 116
Appendix C: Understanding the Symbols 117

Intended Use

The EasyLyte is an automated, microprocessor-controlled analyzer for measurement of sodium, potassium, chloride, calcium and pH in serum, plasma, whole blood and urine (urine results on Na/K, Na/K/Cl, and Na/K/Li only).

★ To obtain accurate results, the EasyLyte must be operated with Medica's specially packaged calibrant and bovine-based control materials, and be maintained as described in this manual.

Summary and Explanation

Designed for fast, efficient use, the EasyLyte provides clinically accurate analysis for patient diagnosis and treatment. State-of-the-art, flow-through, ion selective electrodes measure the test sample. The analysis takes 55-60 seconds and requires only 100 µL of serum, plasma, or whole blood, or 400 µL of diluted urine (90 second urine analysis cycle/available for Na/K and Na/K/Cl analyzers). EasyLyte Na/K and Na/K/Cl analyzers offer a capillary sampling feature for the measurement of capillary blood samples with volumes as low as 60 µL. The EasyLyte displays analysis results automatically.

 You will be guided through the display menu by pressing the yes or no button in response to questions and messages that appear on the display. Calibration is automatic, but can be performed on demand. A unique solutions pack contains standard solutions to calibrate the analyzer. The disposable solutions pack also contains a waste receptacle for spent samples and solutions, eliminating the need to handle biological waste materials.

Many medications and disease states cause temporary imbalance of the body's electrolytes and frequent monitoring is required as a necessary part of patient treatment. Drugs for hypertension act as diuretics, causing the body to excrete high levels of potassium in the urine. Imbalances in the body's potassium level affect the neurological and muscular activity of the body. Drugs that influence sodium concentration include: all diuretics, chlorpropamide, vasopressin, antihypertensive agents, and corticosteroids. Sodium imbalance is often associated with dehydration and edema. Chloride, the most abundant anion in serum, is commonly measured along with sodium and potassium. Low serum chloride values are seen in metabolic acidotic states and in salt-losing renal diseases.

Ionized calcium is the only physiologically active form of calcium. Increased or decreased levels of ionized calcium are directly related to hyperparathyroidism and hypoparathyroidism respectively. Calcium regulates muscle contraction, hormone secretion, and membrane permeability. Acidosis (low pH) causes an increase and alkalosis (high pH) a decrease in the amount of ionized calcium.

Lithium is not normally present in serum, and it does not metabolize. However, it is administered in the form of the carbonate salt to control manic-depressive disorders. It is believed that lithium cations affect the central nervous system neurotransmitters, as well as the kidneys. Excessive levels may cause lithium toxicity.

Operational Hazards and Precautions

Read the Operator's Manual before setting up or operating the EasyLyte.

Observe all Warnings, Notes, and Key Information in this manual.

Failure to leave the EasyLyte connected to power with a SOLUTIONS PACK in place could damage the electrodes.

There are no operator serviceable parts inside the EasyLyte. If electromechanical problems are suspected, DO NOT attempt to open the back cover. Contact your authorized Medica Technical Service Representative.

The power cord of the EasyLyte must be connected to a matching grounded outlet supplying 110 VAC, 50/60 Hz or 220 VAC, 50/60 Hz, as indicated on the label on the rear of the analyzer.

The EasyLyte contains sensitive electronics and must be properly grounded. The EasyLyte should NOT be plugged into a circuit protected by a GFI (Ground Fault Interrupter).

The environment should be as free as possible from dust, mechanical vibrations, and electrical interference. Avoid proximity to brush-type motors (certain types of centrifuges), diathermy machines, flickering fluorescent lights, and arcing contacts of any kind. Do not install the EasyLyte near heat producing equipment or near incandescent lighting.

BIOHAZARD



When collecting and handling biological specimens, the Center for Disease Control (CDC) recommends that all samples be considered biohazards which may be contaminated with HIV or other pathogens. Any replaceable item which comes in contact with biological samples, including the sample probe, solution valve, probe wipers, sample tube, sample detector, electrodes, electrode connectors, membrane assembly, electrode housing, pump tubing, and solutions pack may contain potentially contaminated material. Treat all components, during use and disposal, as you would any biohazardous material. If cleaning is necessary, Medica recommends using a 10% solution of household bleach (NaOCl) as a disinfectant (except for the membrane assembly). Protective clothing and gloves are recommended.

EasyLyte Na/K; Na/K/Cl; Na/K/Li

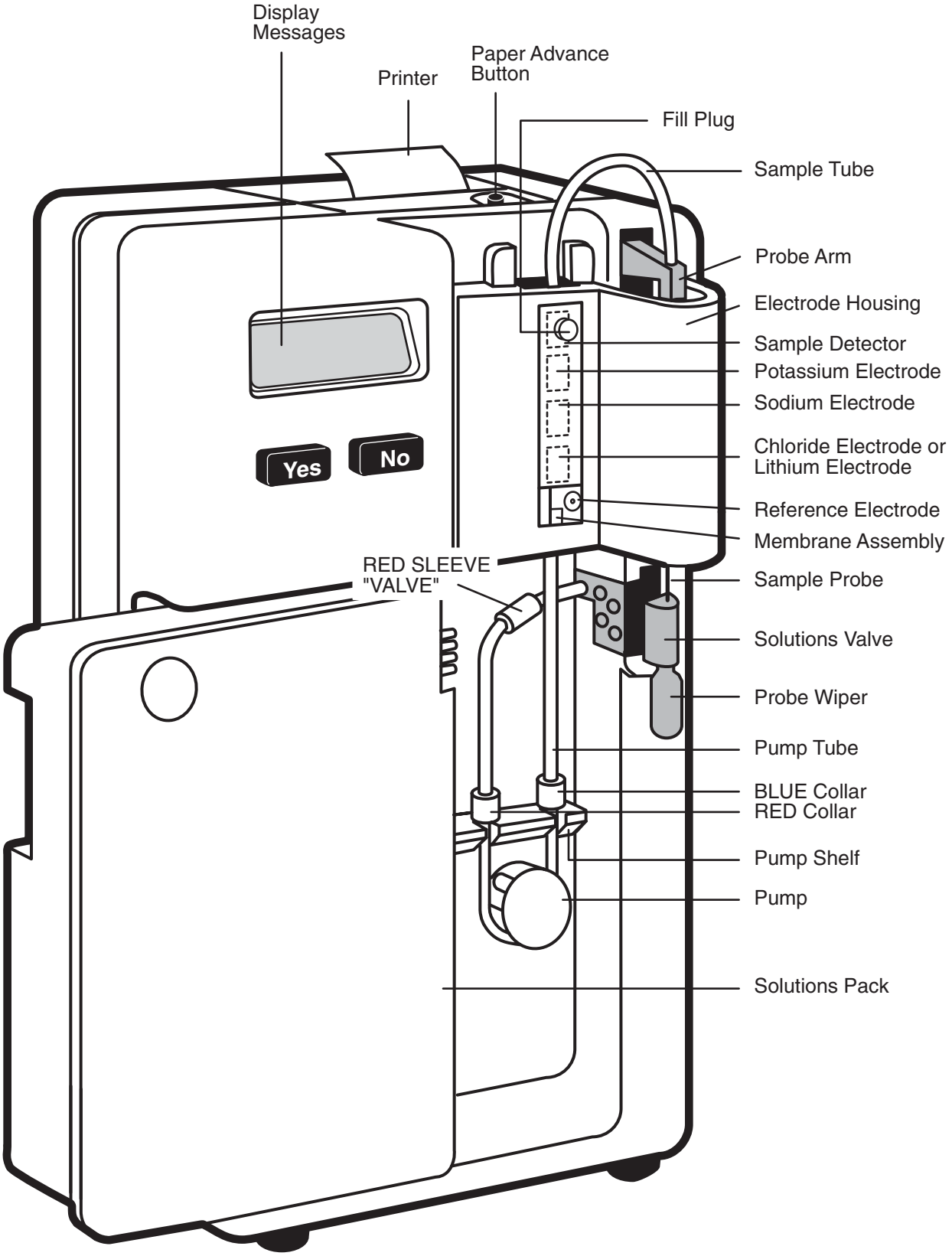

EasyLyte Na/K/Ca/pH

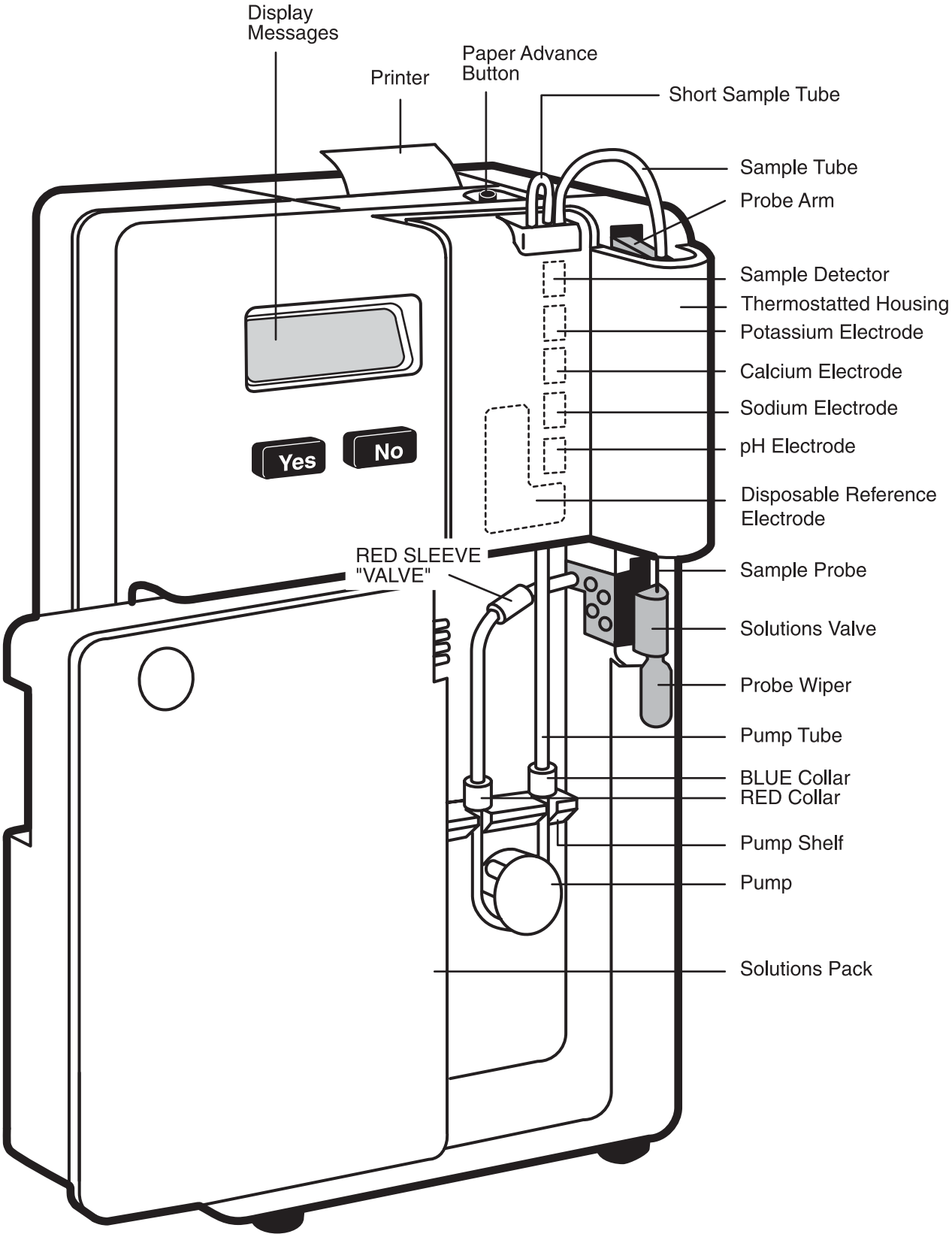

2. Analyzer Installation

Unpacking

Upon arrival, carefully remove the EasyLyte and accessories from shipping containers and place on solid work surface. Visually inspect EasyLyte for any damage sustained during shipment. If any damage is found, notify your EasyLyte dealer.

Component Installation/Replacement

To install or replace EasyLyte components, follow the procedures in this chapter. New EasyLyte analyzers are shipped with the solutions valve and sample probe installed. The electrode housing, if installed, must be removed to replace or install any component other than the solutions pack.

Solutions Valve

Install the solutions valve into the EasyLyte by pushing firmly on the rounded front of the valve with the palm of your hand until the valve fully seats into place. The flat surface of the solutions valve must be flush with the front of the mounting track in the case.

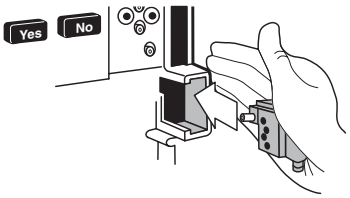

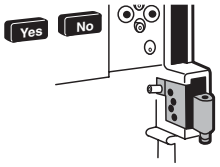

Solutions Valve Removal

Grasp the solutions valve with both hands as shown, and pull firmly straight out.

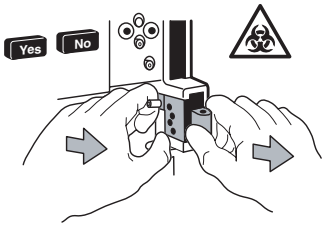

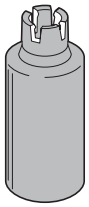

Probe Wiper

Install the probe wiper by pushing it firmly onto the mounting post on the bottom of the solutions valve.

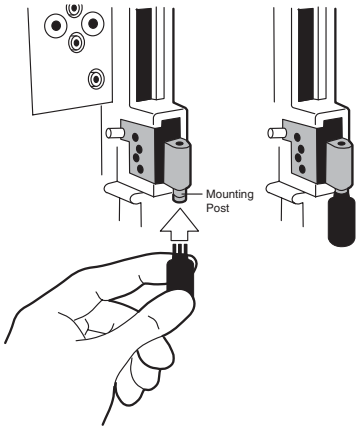



Probe Wiper Removal

Remove and discard the probe wiper every two weeks, after 100 serum/plasma samples or after 50 whole blood samples, whichever comes first. Replace only with a new probe wiper.

WARNING: The used probe wiper contains human blood products which may be contaminated with HIV or other pathogens. Handle and dispose of properly.

Sample Probe

First rotate the sample probe until the side probe hole (near the rounded tip) faces forward. Then, gently insert the rounded tip of the sample probe downward into the top of the solutions valve. Align the probe collar ring with the white notch on the probe arm. Snap the sample probe into place, using your thumbs. Apply pressure only on the probe collar. Be careful not to bend sample probe during installation.

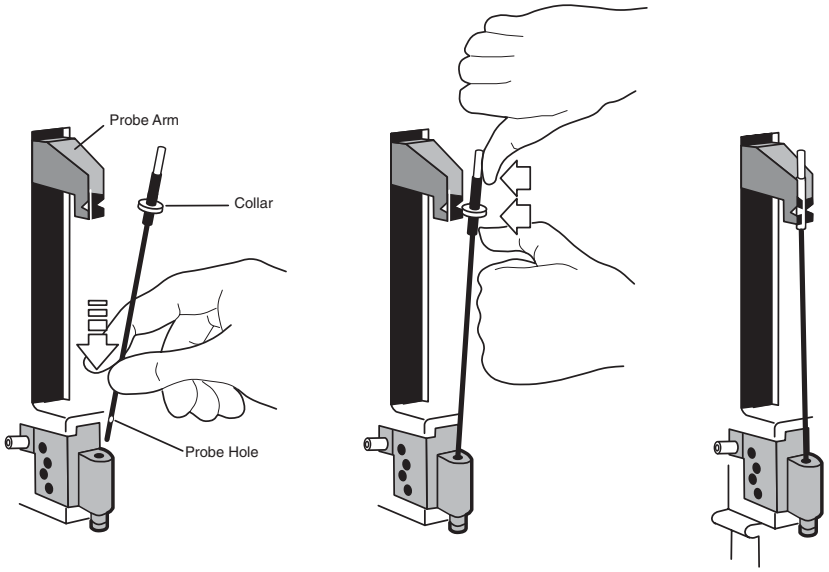

Probe Removal

Using both hands, pull forward to unsnap the sample probe, as shown. Then, gently slide the sample probe up and out of the solutions valve.

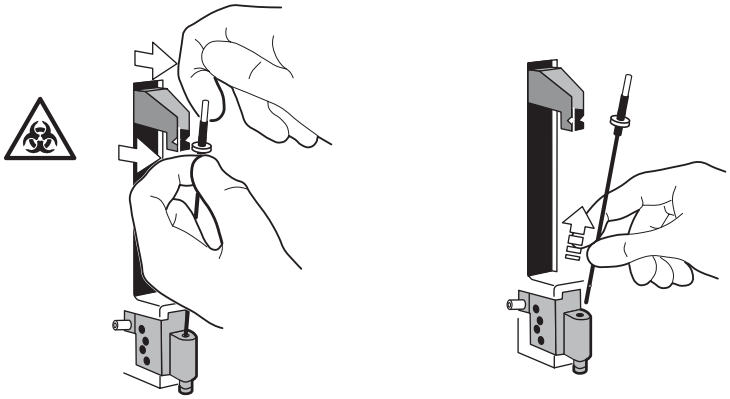

Membrane Assembly

Remove the membrane assembly from the vial in the plastic bag, holding it by the large end. Do not touch the gray material. Note the small, clear, round window in the gray material. This window must face forward and be visible to the operator after it is installed in the electrode housing.

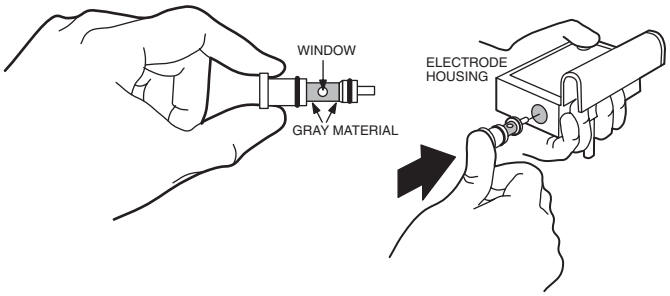

Push the membrane assembly into the electrode housing using a firm and straight motion until it stops. (Be sure you can see the small, round window in the gray material when you look into the electrode housing from the front.)

Membrane Assembly Removal

When replacement of the membrane assembly is required, the internal filling solution should also be replaced. Place electrode housing on its side on a work surface and pull out the membrane assembly, as shown. Hold the electrode housing over a sink and allow internal filling solution to drain out. Install new membrane assembly. Refill the electrode housing with fresh internal filling solution and wipe dry any solution remaining on the exterior of the housing before attempting calibration.

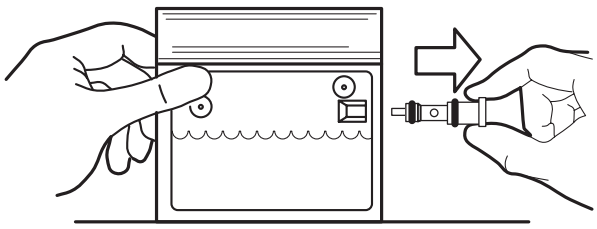

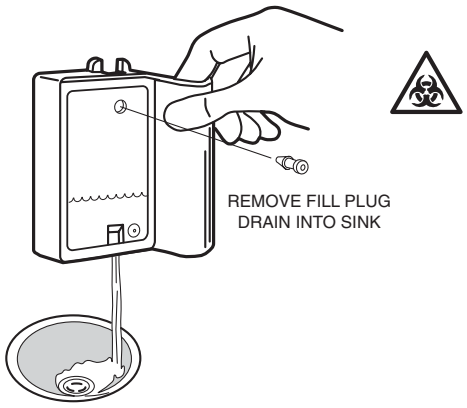

Reference Electrode (Na/K; Na/K/Cl; Na/K/Li)

Remove the reference electrode from its package. Remove and discard the red vinyl cap and packaging.

Screw the new reference electrode into the electrode housing using the metal tool. The flat surface of the reference electrode should be flush with the electrode housing. Do not tighten excessively.

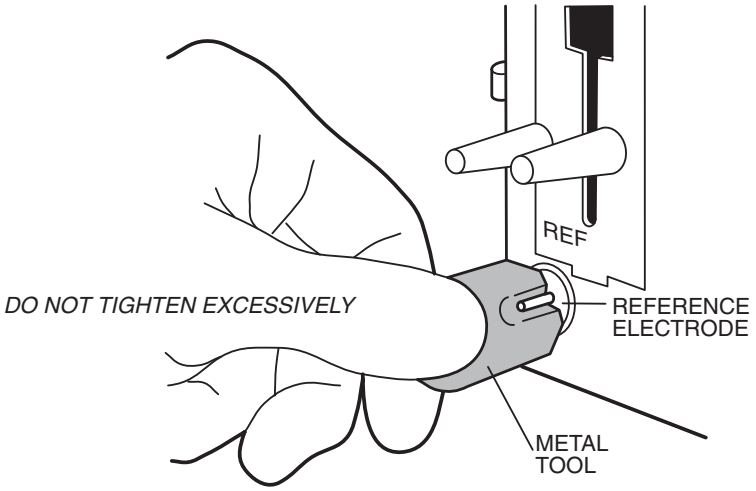

Reference electrode removal

When replacement of the reference electrode is required, the internal filling solution should be emptied. It can be emptied by removing the membrane assembly or the reference electrode. To remove the reference electrode, unscrew it with the metal tool provided. Install the new reference electrode as described above. Refill the electrode housing with fresh internal filling solution and wipe dry any solution remaining on the exterior of the housing before attempting calibration.

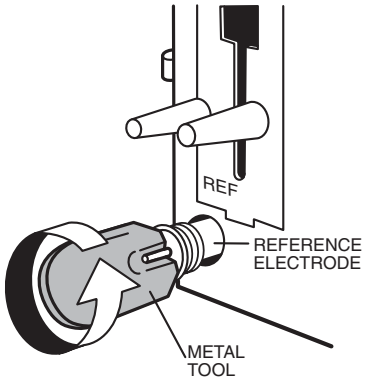

Reference Electrode (Na/K/Ca/pH)

Remove the calcium reference electrode from its package. Remove and discard the red vinyl caps from the top and bottom of the flow path. Wipe the outside of the reference electrode dry. Slide the new reference electrode into the back of the electrode housing. Make sure all surfaces are clean and dry.

Reference electrode removal

Slide the electrode stack up at least one inch by pushing up on the pH electrode pin. Firmly pull on the reference electrode at the finger recesses and slide the reference electrode out from the back of the thermostatted electrode housing.

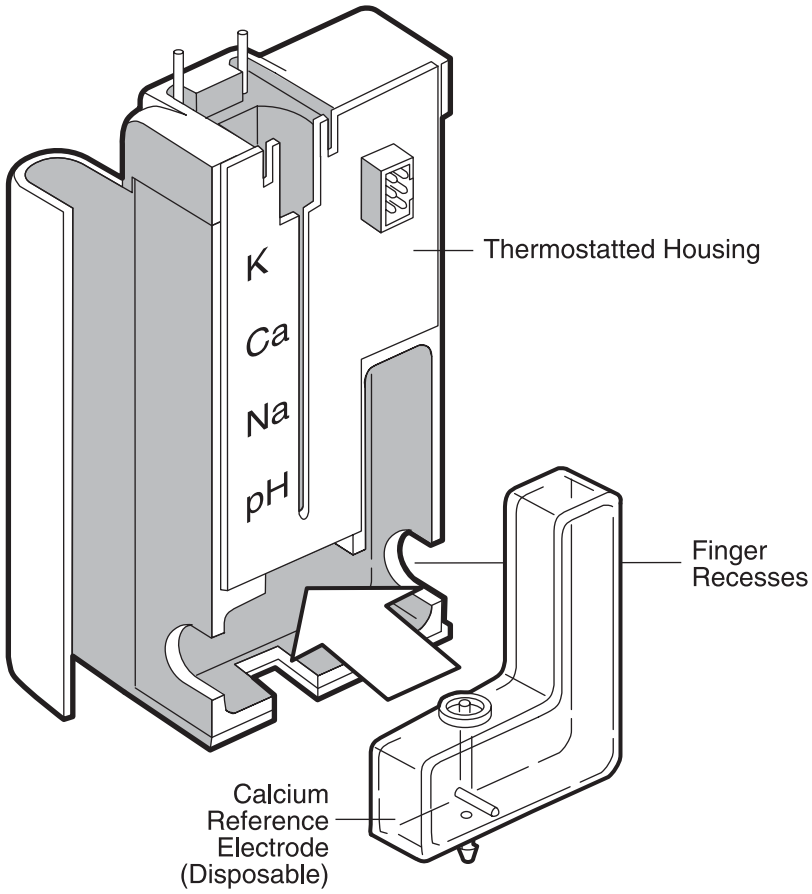

Building the Electrode Stack

Remove electrodes and electrode connectors from the packaging. Remove and discard the red vinyl caps from the potassium and calcium electrodes.

Refer to the electrode packaging for use-life information. ▲

Assemble the electrode connectors, electrodes, and sample detector. Make sure each component is clean and dry, and the electrode symbols are right-side up. Connect the sample tube to the metal connector on the sample detector at the top of the electrode stack.

Electrode connectors must be in place to ensure proper operation. Upon replacement of electrodes, use new connectors. The connectors must be clean and dry. ★

Na/K; Na/K/Cl; Na/K/Li

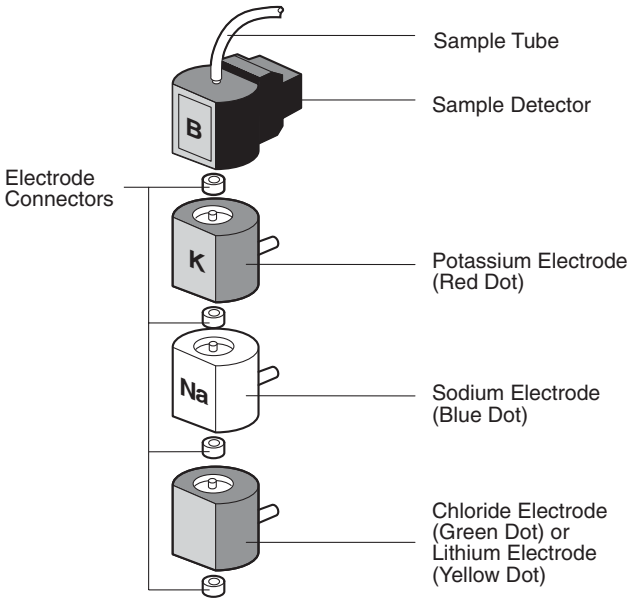

Na/K/Ca/pH

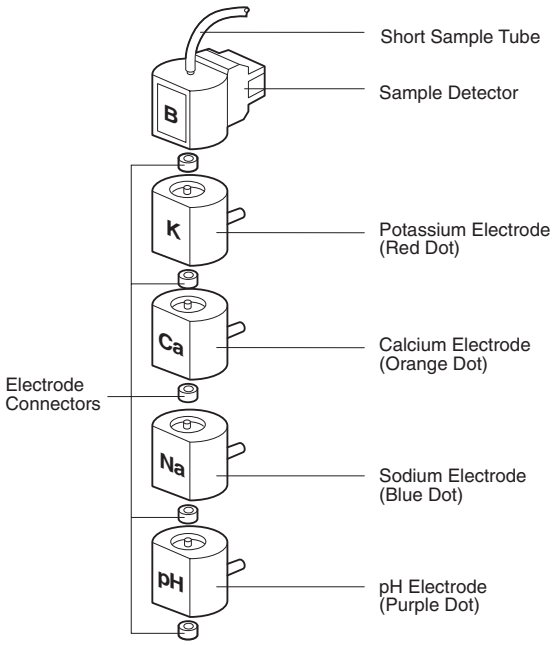

Loading the Stack

Slide the electrode stack into the electrode housing. Push down firmly until the sample detector snaps into position. The colored dots on each electrode must line up with the corresponding dots on the electrode housing.

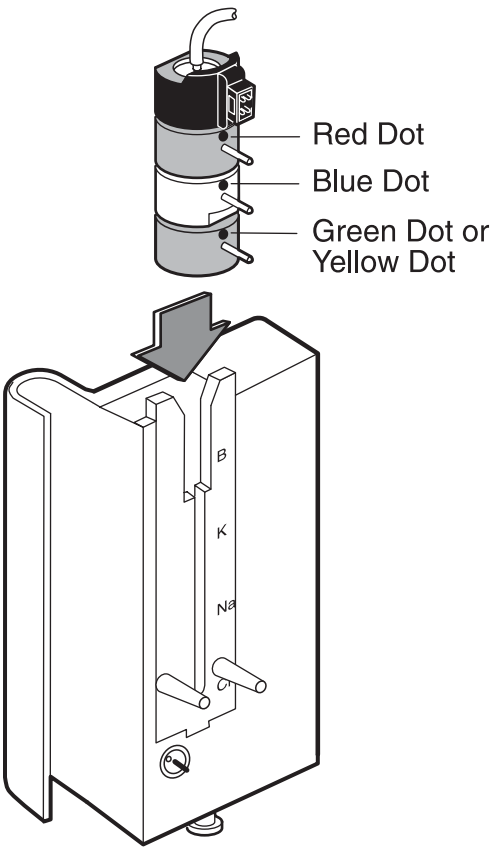

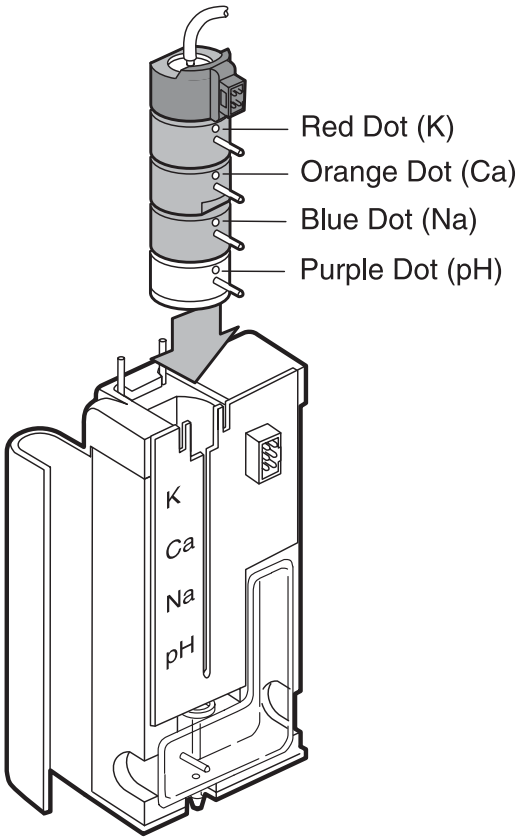

Carefully install the electrode housing into the EasyLyte by pushing the guides into the guide receptacles using a firm and straight motion. The sample detector and the silver electrode pins must all plug into the receptacle jacks in the EasyLyte.

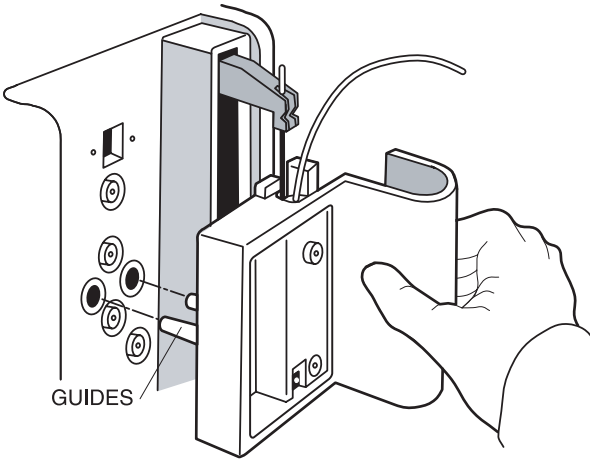

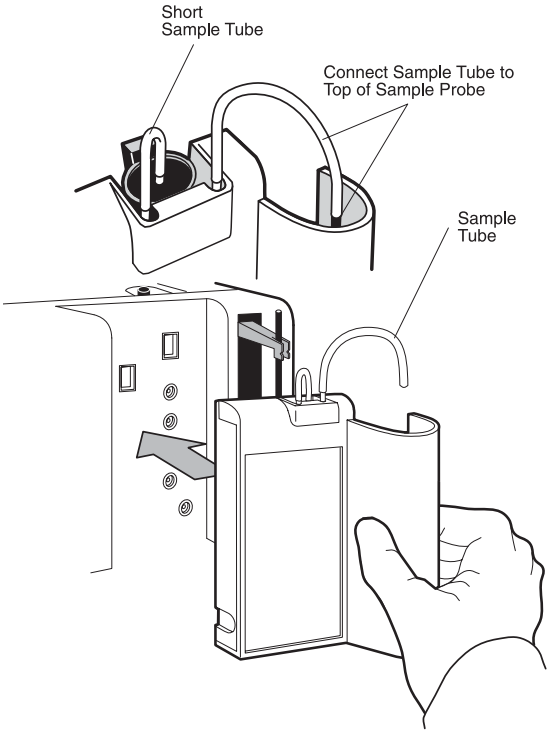

Do not force the electrode housing into place. If the electrodes are properly installed, the electrode housing should slide easily into position. When correctly installed, the electrode housing window will be flush with the front of the analyzer.

Push up on the bottom (Cl^- or Li^+) electrode pin to remove the entire electrode stack.

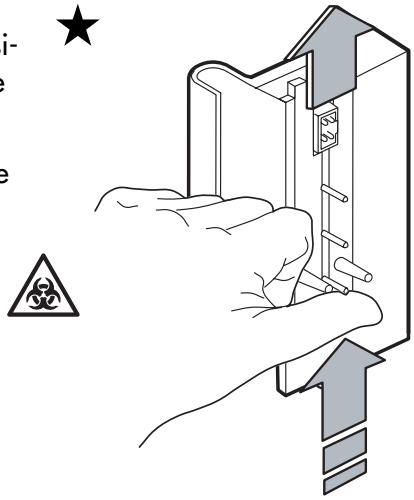

Install the Tubing

Connect the sample tube to the top of the sample probe. For Na/K/Ca/pH analyzer, connect the short sample tube and the sample tube as shown in illustration.

Note that the pump tube has a red and a blue collar. Connect the red collar end of the tube to the solutions valve. Place the red collar above the left slot of the pump shelf. Stretch the pump tube around the pump and place the blue collar above the right slot of the pump shelf. Connect the free end of the pump tube to the bottom of the electrode housing.

Na/K; Na/K/Cl; Na/K/Li

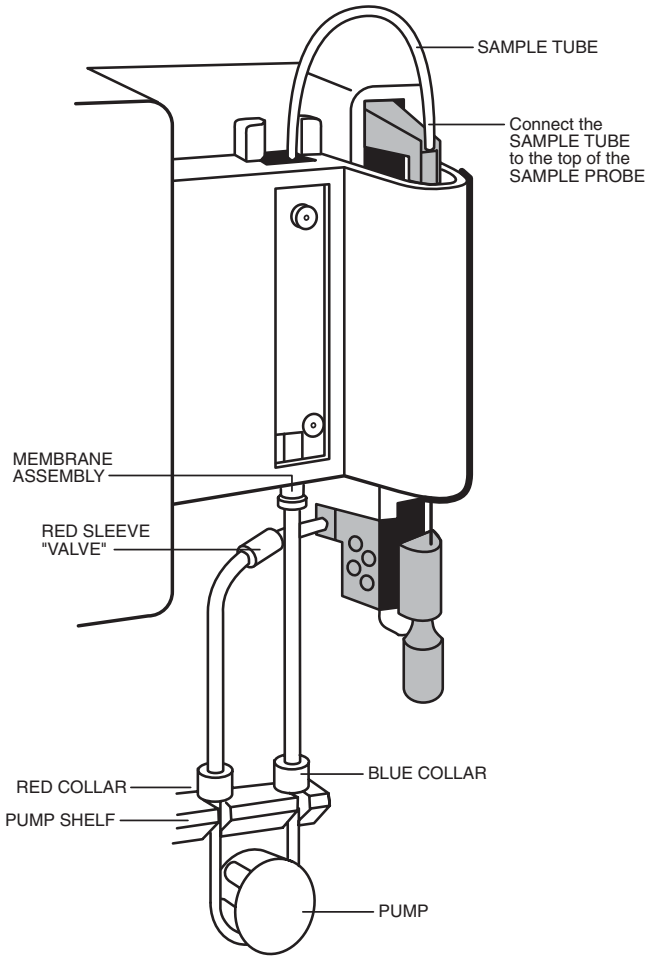

Na/K/Ca/pH

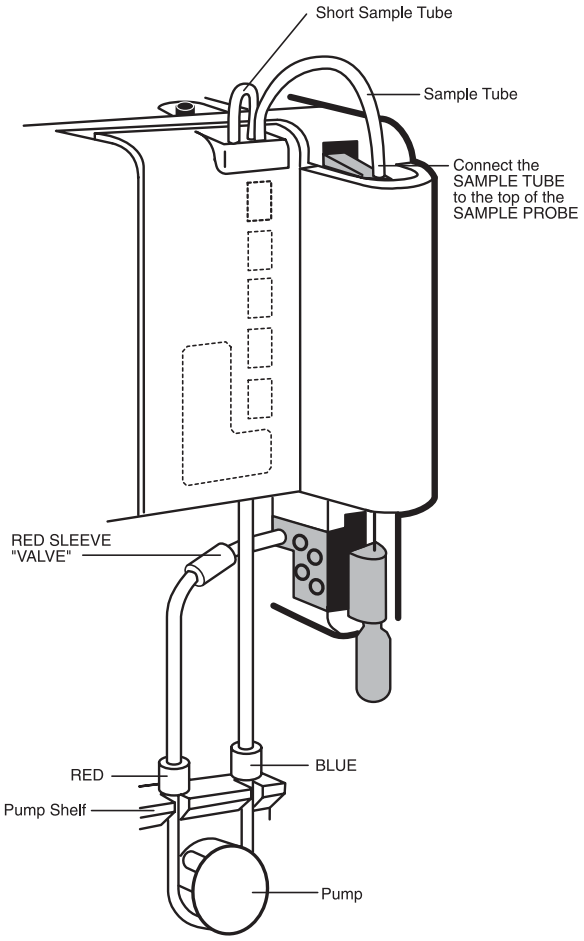

Internal Filling Solution

Remove the cap on the internal filling solution bottle. Remove or puncture the red seal. Place the spout cap on the bottle. Remove the fill plug from the electrode housing. Fill the electrode housing through the fill plug hole until the internal filling solution reaches the "fill line" on the window. Replace fill plug.

Caution: Do not spill internal filling solution behind the electrode housing as this could affect instrument performance.

Failure to replace the fill plug will result in excessive evaporation of the internal filling solution.

The internal filling solution must be changed at least every 6 months because the concentration of potassium chloride in the solution will decrease gradually over time. If this solution is not replaced every 6 months, the accuracy of reported control and patient results may be impaired.

Look for air bubbles on the gray material of the membrane assembly. Gently tap the electrode housing until all air bubbles move away from the membrane assembly. Wipe dry all internal filling solution remaining on the exterior of the electrode housing.

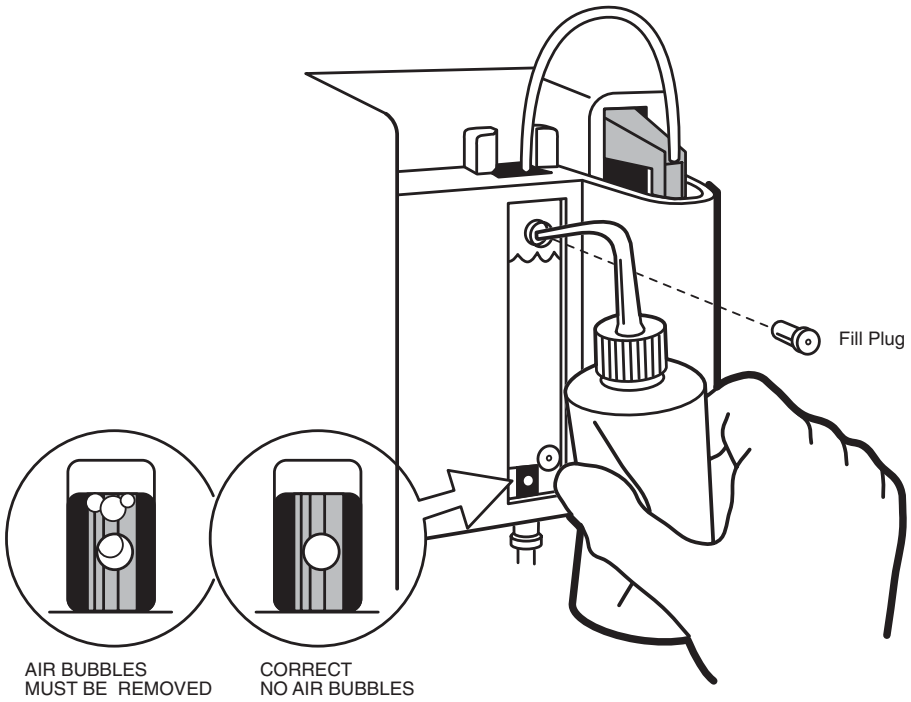

Solution Removal

To drain internal filling solution from the electrode housing, refer to membrane assembly removal in this chapter.

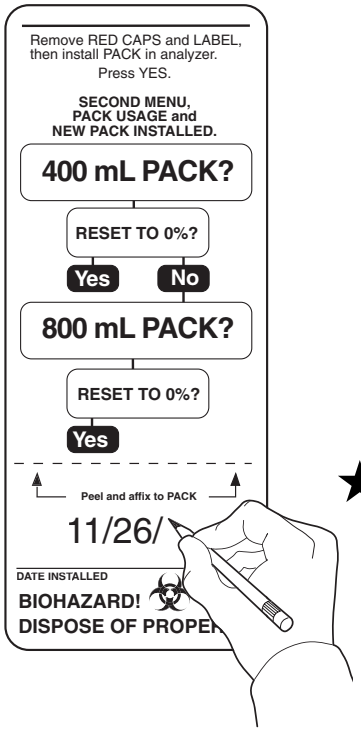

Solutions Pack Installation

Remove the orange label. Record the date on the date installed label, peel off and affix to front of solutions pack.

Do not squeeze the solutions pack. Hold the solutions pack in your left hand. Use the convenient finger grip, as shown.

Remove the 4 red caps.

Place solutions pack into the front of the analyzer, and slide the solutions pack firmly to the right, plugging it into the solutions valve. Push the solutions pack until it stops. Refer to the Pack Usage? Section in this chapter for further instructions on installing a new solutions pack.

★ Do not use outdated solutions packs. Refer to the solutions pack label for use life information.

The electrodes should be exposed to EasyLyte reagents at all times. Failure to have a solutions pack in place could damage the electrodes.

Na/K; Na/K/Cl; Na/K/Li

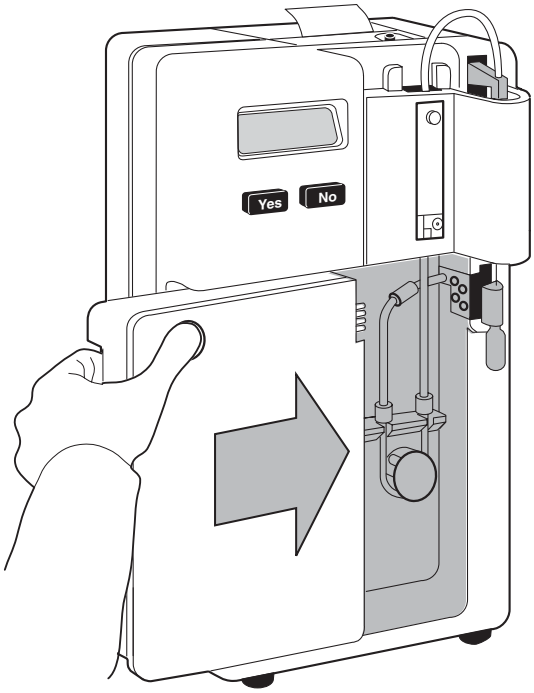

Na/K/Ca/pH

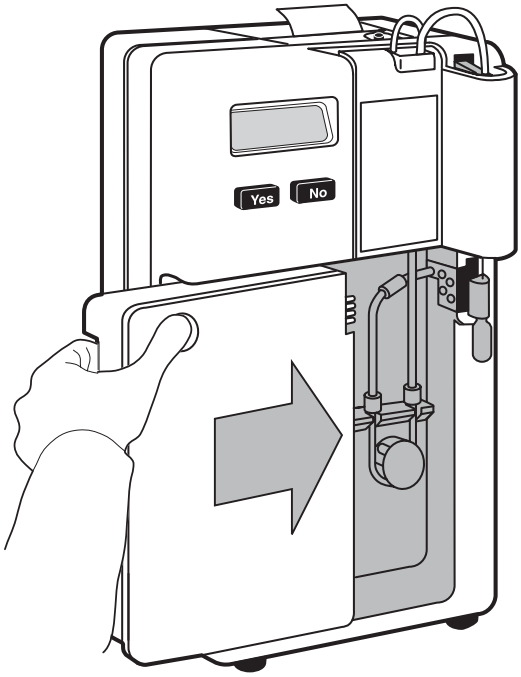

Analyzer Disassembly



To remove or replace any EasyLyte components, disassemble the EasyLyte in the following order:

1 Remove the solutions pack.

2 Remove the electrode housing by disconnecting the sample tube from the top of the sample probe and disconnecting the pump tube from the electrode housing.

3 Remove the sample probe.

4 Remove the probe wiper.

5 Remove the solutions valve after disconnecting the pump tube from the valve pipe.

Power Up

Confirm that the EasyLyte voltage setting on the rear cover matches the outlet voltage. If it does not, contact your EasyLyte distributor.

★ When all of the components have been assembled, plug the EasyLyte into a grounded outlet. You will hear a beep. ****Na/K**** or ****Na/K/Cl**** or ****Na/K/Li**** or ****Na/K/Ca/pH**** will appear on the display. The EasyLyte calcium analyzer has a heated electrode housing to maintain the electrodes at 37ºC. For accurate results, wait at least 30 minutes after any power up before starting a calibration cycle. There is no on/off switch. When the EasyLyte is plugged in, the power is on. The Na/K/Ca/pH analyzer will display **WARMING UP PLEASE WAIT...**.

Press the yes button. The probe will move slightly. When the EasyLyte displays **CALIBRATE NOW?**, installation is complete.

★ After initial setup, do not unplug the EasyLyte unless it must be moved to another location in the office or laboratory. Failure to leave the EasyLyte plugged in, with a solutions pack in place, could cause damage to the electrodes.

▲ The EasyLyte has an internal clock which is preset at the factory. If the date or time is incorrect upon installation, refer to **CHANGE DAY/TIME?** instructions under ***DATE/RANGES?***.

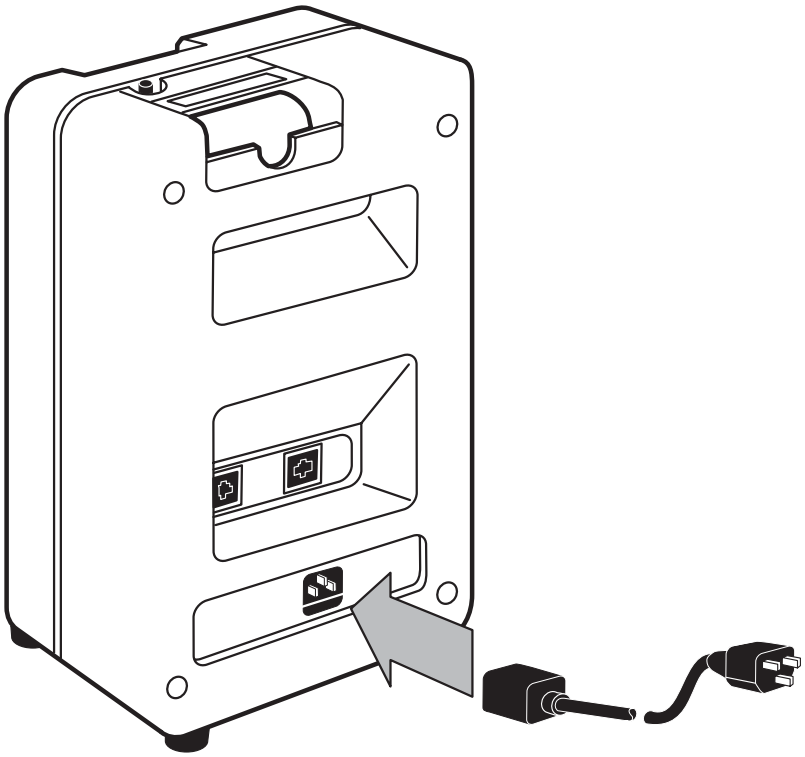

Printer Setup

The built-in printer will provide a permanent record of calibration and analysis results. Other data can also be requested for printing. If required, the printer can be turned off. (To prevent damage to the printer head mechanism, the printer must be turned off if the EasyLyte runs out of printer paper.) Refer to ***OPERATOR FUNCTS?***.

To install the roll of paper into the printer, cut off the beginning section of paper that has tape or adhesive. Cut the new edge to a point in the center of the paper, forming a V. Gently push this leading edge of the paper into the slot behind the printer until the paper tip reaches the plastic tear bar. Pull the paper by hand until the full width appears at the tear bar. Tear off any excess paper. The paper roll rests in the curved depression behind the printer. After installing the paper, replace the small cover on top of the housing to protect the printer paper roll.

Use of the EasyLyte printer requires some precautions:

1 Use only the printer paper provided by your EasyLyte distributor.

2 Do not permit the printer to operate without printer paper installed. In this situation, enter the **USER OPTIONS?** section of the software menu and answer yes to **PRINTER OFF?**. The absence of paper during printer operation will cause premature printer failure.

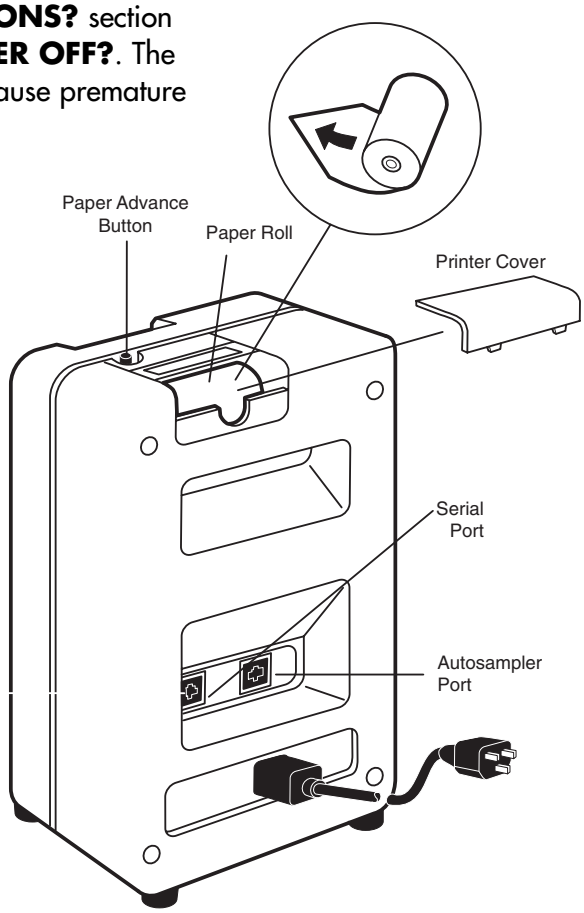

3 Do not apply any lubricants, grease, or other materials to the printer assembly under any circumstances.

Failure to comply with the above requirements will void the printer warranty.

Printer Tear Bar Removal

▲ If a paper jam occurs, it will be necessary to remove the printer tear bar. Follow the instructions outlined below.

If the printer assembly fails to function correctly, refer to the printer instructions under Troubleshooting, Tear Bar Removal

Insert the rounded edge of the Reference Electrode Tool into the slot on the right side of the tear bar. Press downward on the opposite end of the tool to pop out the Tear Bar.

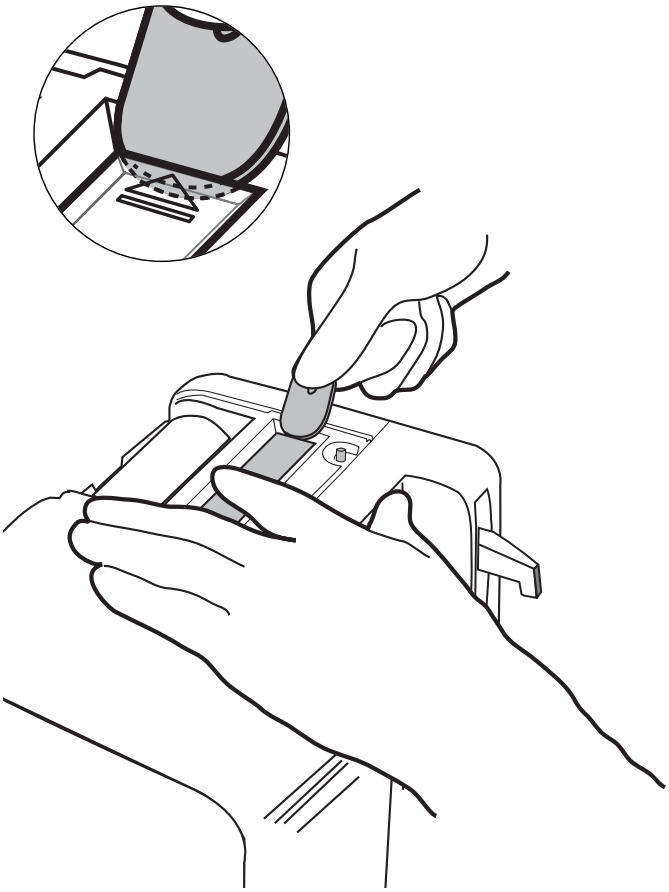

Tear Bar Installation

Hold the tear bar with the flat side facing up and the sharp edge facing the back of the analyzer. Align the left side of the tear bar with the left side of the printer opening, then press the right side down until it snaps into place.

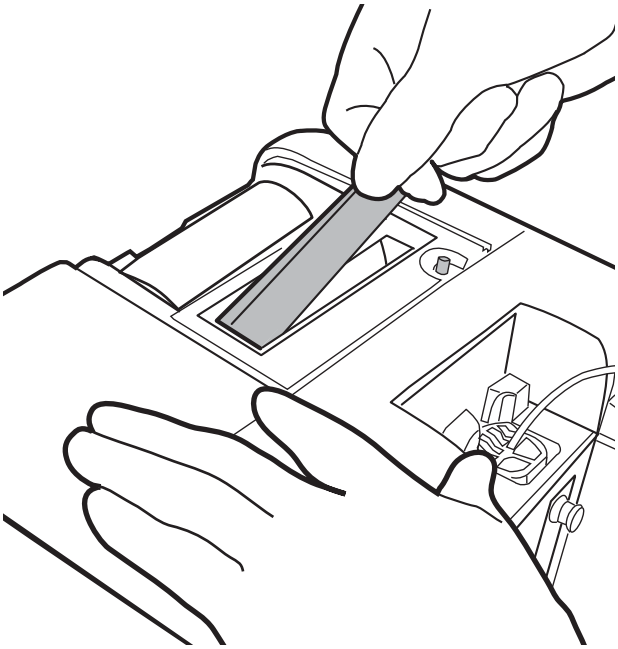

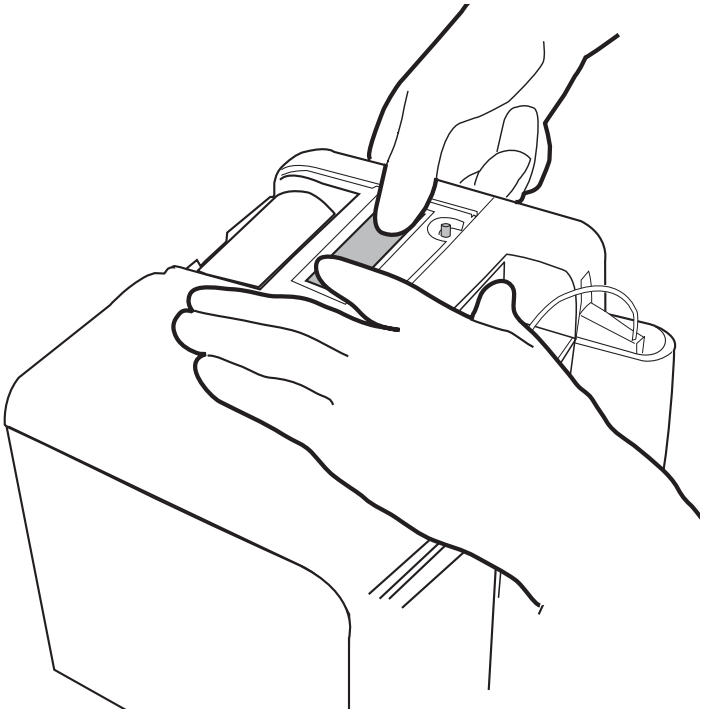

Computer Connection

The EasyLyte systems can be interfaced with an external computer by means of an RS-232 serial interface. Potential users will require the following information:

EasyLyte RS-232 Protocol

Transmission Rate	1200 baud
Bit Configuration	8 data bits, 1 stop bit, no parity

This interface requires a serial cable from Medica. A telephone-style connector at one end of this cable plugs into the receptacle labeled on the back of the EasyLyte. The other end of the cable is a female D-Sub 9 pin connector with the following pinouts:

Pin #2	TxD
Pin #3	RxD
Pin #7	CTS
Pin #8	RTS
Pin #5	Signal Ground

Data control characters such as ETX, STX, etc. are not present. All lines end with CRLF (0DH, 0AH).

For IBM-PC compatible computers running:

- Windows 95, select Hypertrm from Accessories/Hyperterminal
- Windows 98 and Windows 2000, select Hypertrm from Accessories/Communications/Hyperterminal



Connecting the EasySampler

The EasyLyte's autosampler port operates the Easysampler automated sampling device. For operation of this system, refer to the Automated Sampling chapter in this manual.

Calibrate Now?

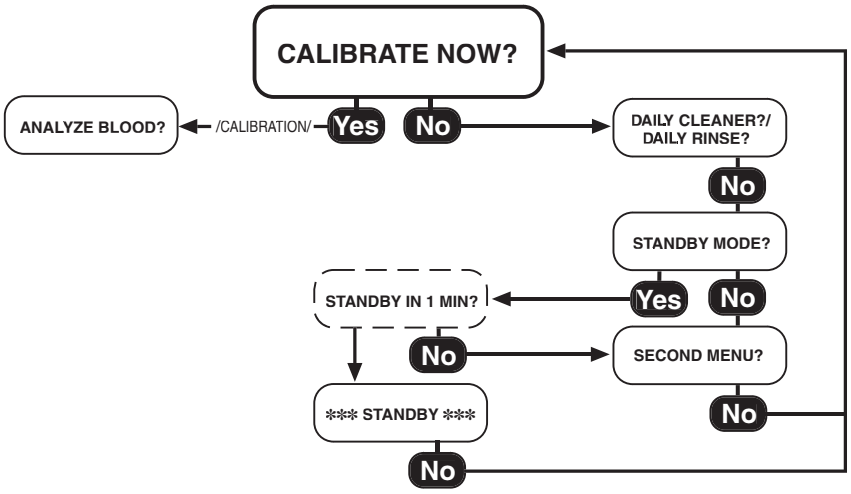

To verify proper installation, press yes to **CALIBRATE NOW?**.

Upon successful calibration, the EasyLyte will display **ANALYZE BLOOD?**.

If **ANALYZE BLOOD?** is not displayed at the end of the calibration cycle, observe the messages displayed and printed. Review the EasyLyte installation procedure and, if necessary, refer to Troubleshooting. After the corrective action, repeat **CALIBRATE NOW?**.

CALIBRATE NOW? can also be accessed by entering the ***OPER FUNCTS?*** section located in the **SECOND MENU?**

The EasyLyte is factory set to perform automatic calibrations every four hours, with the first calibration taking place at 7:00 A.M. These settings can be changed by following the instructions outlined under ***DATE/RANGES?***.

▲ If the EasyLyte is not used during a calibration period, the analyzer will automatically go into ******STANDBY*****.

To return to **ANALYZE BLOOD?** from ******STANDBY*****, calibration must be performed.

Analyze Blood?

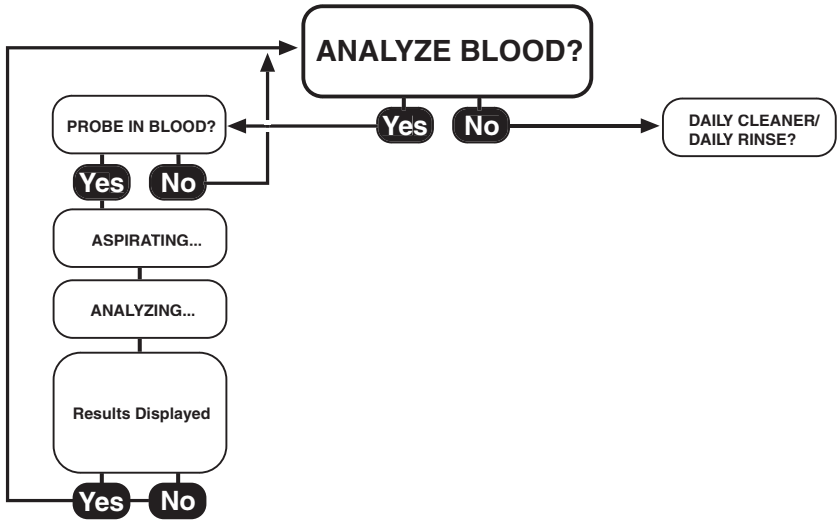

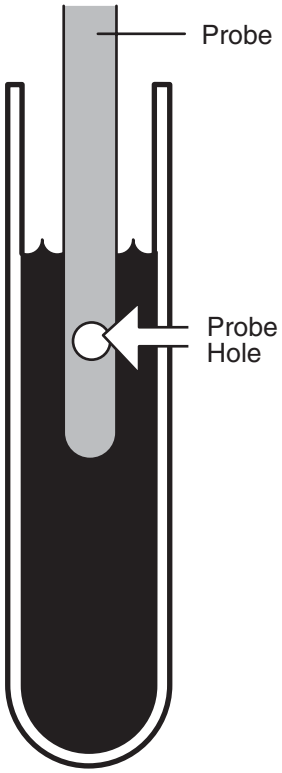

To obtain patient samples, follow the procedures and precautions described under Sample Handling and Collection. Quality control material should be run prior to patient sample analysis.

When **ANALYZE BLOOD?** appears on the display, press yes. The sample probe lowers and **PROBE IN BLOOD?** appears on the display. Place the sample container up to the sample probe.

Make sure the probe hole on the sample probe is below the surface of the sample throughout the sampling operation.

Press yes. Sample is aspirated into the EasyLyte. Hold the sample container in place until the EasyLyte automatically raises the sample probe. If air is aspirated, **AIR IN SAMPLE** will appear on the display. Repeat sample analysis, insuring that the probe hole is below the surface of the sample while the analyzer is aspirating. Once the sample is automatically positioned inside the electrodes, analysis begins and the display will read **ANALYZING....** When analysis is completed, results appear on the display and are automatically printed. The EasyLyte is immediately ready for another analysis of blood.

Two additional options are available in the **ANALYZE BLOOD?** mode. The first provides for direct aspiration of the sample from a syringe, and the second allows for aspiration from a capillary. Each option can be activated independently by accessing the **USER OPTIONS?** menu under ***OPER FUNCTS?***.

The **SYRINGE SAMPLE?** option is for operators who routinely collect whole blood specimens in 1cc tuberculin syringes. In this case, partial descent of the probe facilitates the positioning of a syringe directly under the probe. The probe wiper must be removed within this mode, and activation of the **PROBE WIPING?** option is strongly recommended.

The **CAPILLARY SAMPLE?** option is recommended where small sample size is of importance. This mode requires the optional Capillary Adapter Kit available through your EasyLyte dealer, and is used with the probe wiper. This mode accommodates samples as small as 60 µL.





Results falling outside the preset ranges will be flagged as described under ***DATE/RANGES?***.

▲

Results outside of the measurement ranges of Na 20–200 mmol/L, K 0.2–40 mmol/L, Cl 25-200 mmol/L, Ca 0.1–6.0 mmol/L, pH 6.0–8.0, will be flagged with "!!". For Lithium, results outside the measurement range of 0.2-5.0 mmol/L will be flagged with *****.

▲

Due to the sensitivity of the Lithium electrode to abnormal concentrations of sodium ions in some patient samples, if the Sodium electrode Cal value is unacceptable, or if a measured sodium value is less than 100 mmol/L or greater than 200 mmol/L, the Lithium value will not be reported. The EasyLyte will display ***** in place of the Lithium value.

▲

If the measured pH is less than 7.2 or greater than 7.6 units, the normalized calcium result is not displayed.

★

Daily Cleaner?/Daily Rinse?

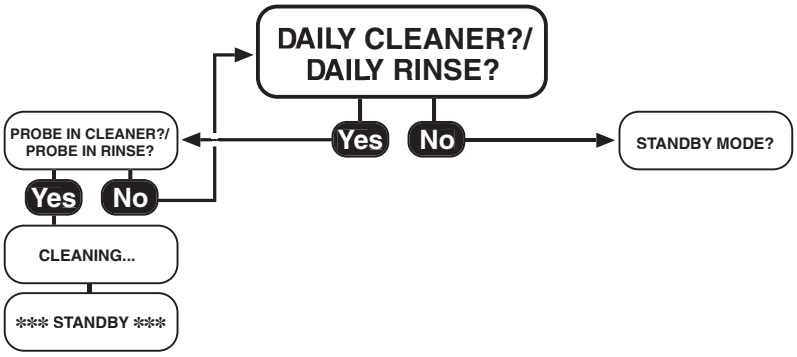

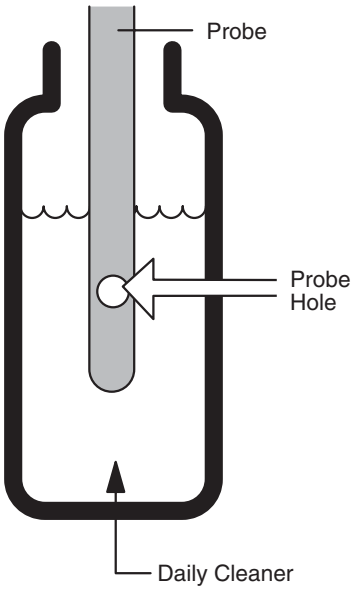

End of Day Procedure:

The "Fluid Path" must be cleaned at the end of every working day to remove protein deposits. **DAILY CLEANER?** or **DAILY RINSE?** is the only daily maintenance required, and is essential to optimize trouble-free analyzer operation. To prepare the Daily Cleaning/Rinse Solution for the Na/K/Li or Na/K/Ca/pH, add the Diluent to the top of the bottle containing the proteolytic enzyme. When not in use, store the solution at 2–8°C. The Daily Cleaning Solution for Na/K and Na/K/Cl requires no preparation.

1 Press yes to **DAILY CLEANER?/DAILY RINSE?**. The sample probe descends and **PROBE IN CLEANR?/PROBE IN RINSE?** appears on the display.

2 Open the bottle of solution and position it so that the sample probe is well immersed in the solution.

3 Press yes. The solution is aspirated into the system. The EasyLyte automatically raises the sample probe when aspiration is complete.

4 **CLEANING.../RINSING...** will appear on the display. When the EasyLyte concludes the cycle, it will automatically go into ***STANDBY***.

MUST USE CLEANR!/MUST USE RINSE! will appear on the display if a cycle was not performed after sample analysis on the previous day.

A cleaning/rinse cycle is required at the end of each day. If a cycle is not performed, automatic calibration will not take place on the following day. In order to proceed with sample analysis, the operator must first perform **DAILY CLEANER?/DAILY RINSE?**, and **CALIBRATE NOW?**.

Standby Mode?

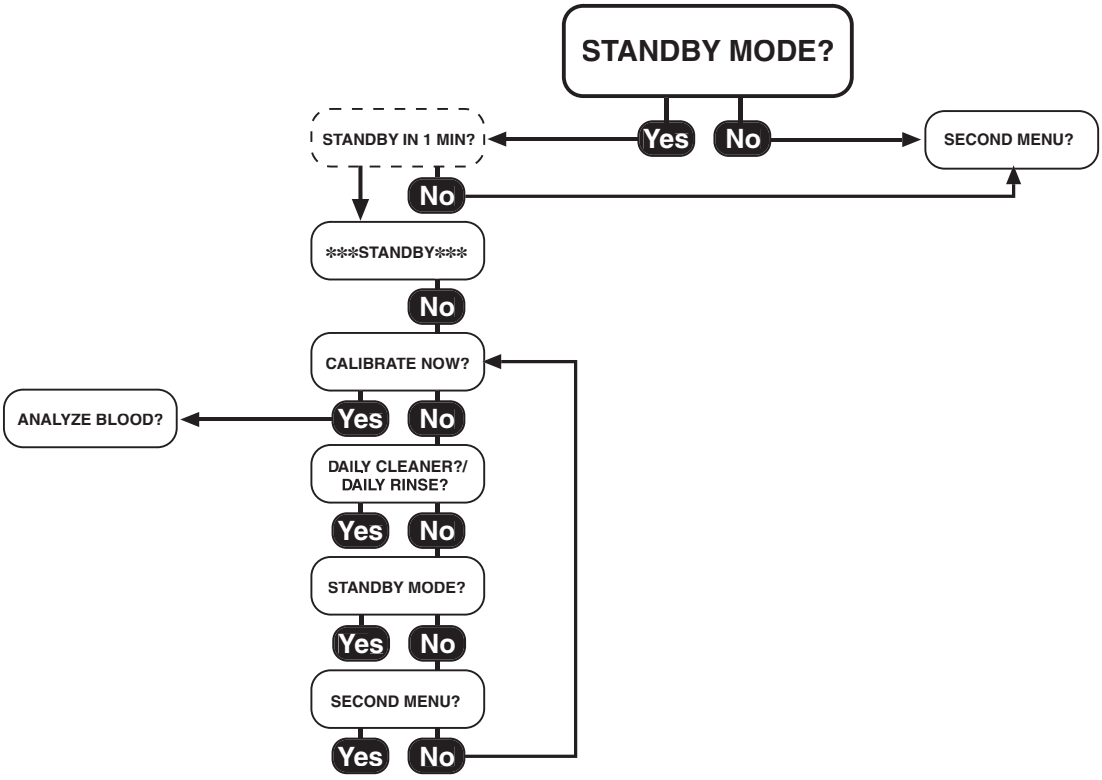

Fluid Conservation and Maintenance

Standby

Placing the EasyLyte in ***STANDBY*** conserves reagents by discontinuing automatic calibrations. The analyzer does, however, draw a small amount of Standard A solution to prevent the electrodes from drying out. To place the EasyLyte in ***STANDBY***, press yes to **STANDBY MODE?**. **STANDBY IN 1 MIN** will flash on the display.

If you press yes by mistake, you have one minute to answer no and return to **SECOND MENU?**.

Automatic Standby

If the EasyLyte is not utilized for analysis during the programmed calibration period, it will automatically go into ***STANDBY*** to conserve reagents.

Auto Return

If the EasyLyte is not calibrated, the display will return to ***STANDBY*** if left in any other screen for 10 minutes.

If the EasyLyte is calibrated, the display will return to **ANALYZE BLOOD?** after 10 minutes.

Maintenance

When you wish to perform any maintenance, put the EasyLyte into ***STANDBY***.

Second Menu?

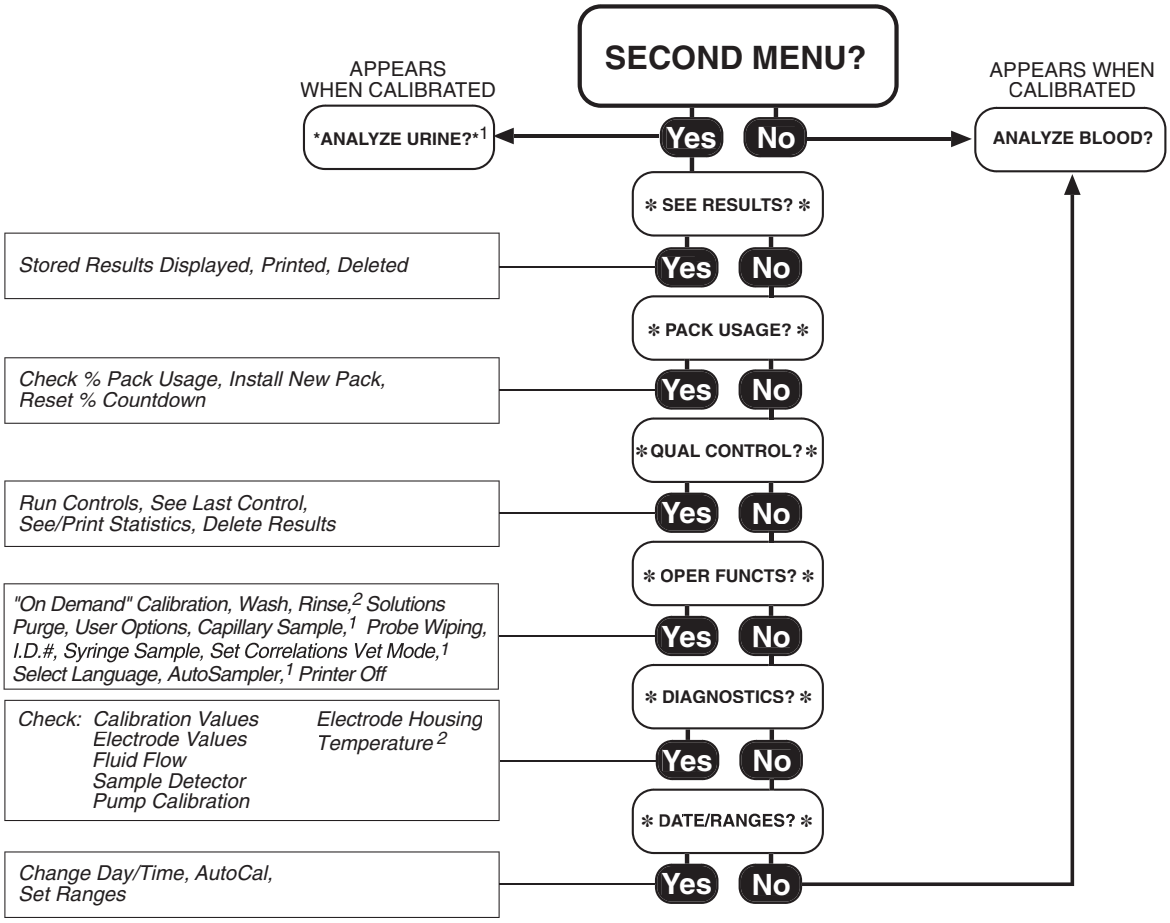

All secondary menu display headings are bracketed with *asterisks*.

1 Not available for Na/K/Ca/pH analyzer
2 Na/K/Ca/pH only

Analyze Urine? (Na/K; Na/K/Cl; Na/K/Li)

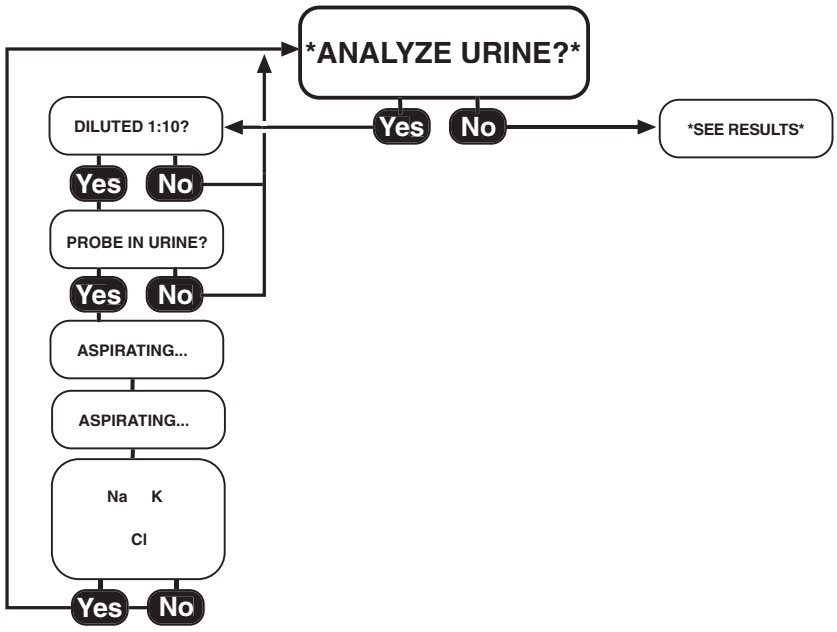

To obtain urine samples, follow the procedures and precautions described under Sample Handling and Collection. ▲

1 Dilute one part urine specimen to 9 parts Urine Diluent. Use only Medica Urine Diluent.

2 Select ***ANALYZE URINE?***.

3 Press yes. The sample probe lowers, and **DILUTED 1:10?** is displayed. The urine sample must be diluted. Do not analyze undiluted urine!

4 Press yes. **PROBE IN URINE?** is displayed.

5 Position the sample container so that the probe hole is well below the surface of the sample. Remember that the EasyLyte aspirates a larger volume of sample in the urine mode (400 µL) than in the blood mode (100 µL). Press yes. Diluted urine is aspirated into the system. Hold the sample container in place until the EasyLyte automatically raises the sample probe.

6 During analysis the display will read **ANALYZING...** .

These results have been corrected for the sample predilution.

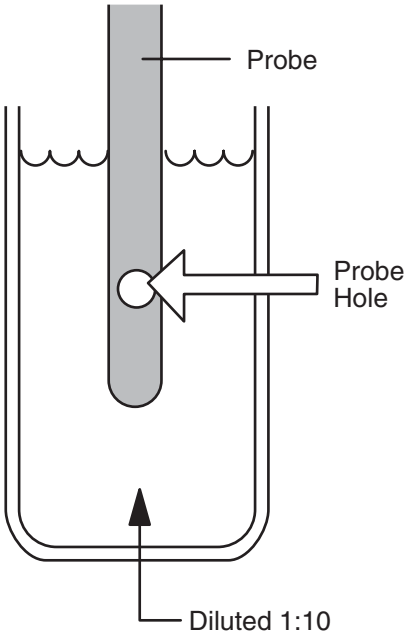

High, Out of Range, Sodium, and/or Potassium and/or Chloride

▲ Values outside of the user-set normal range will be displayed as Na or K or Cl, low or high, as required. Refer to **Na/K/Cl RANGES?** under ***DATE/RANGES?*** for the factory preset normal ranges.

If any value in the urine mode for sodium, potassium or chloride falls outside the measurement limits, all will be flagged with "!!". In this case, it will be necessary to increase the urine sample dilution.

To analyze such a sample:

1 Dilute 1 part of sample with 19 parts of Urine Diluent.

2 Proceed as before, answering yes to **DILUTED 1:10?**.

Multiply displayed results by two.

▲ The message "MV RANGE Na" or (K, Cl) means that the normally diluted (1:10) urine sample has an electrode voltage that is too low for the EasyLyte system to calculate accurately. If this message occurs, the operator must decrease the dilution ratio for the original urine sample:

1 Dilute 1 part of sample with 4 parts of Urine Diluent.

2 Proceed as before, answering yes to **DILUTED 1:10?**

▲ Divide displayed results by two.

▲ Lithium results are not available in ***ANALYZE URINE?***

See Results?

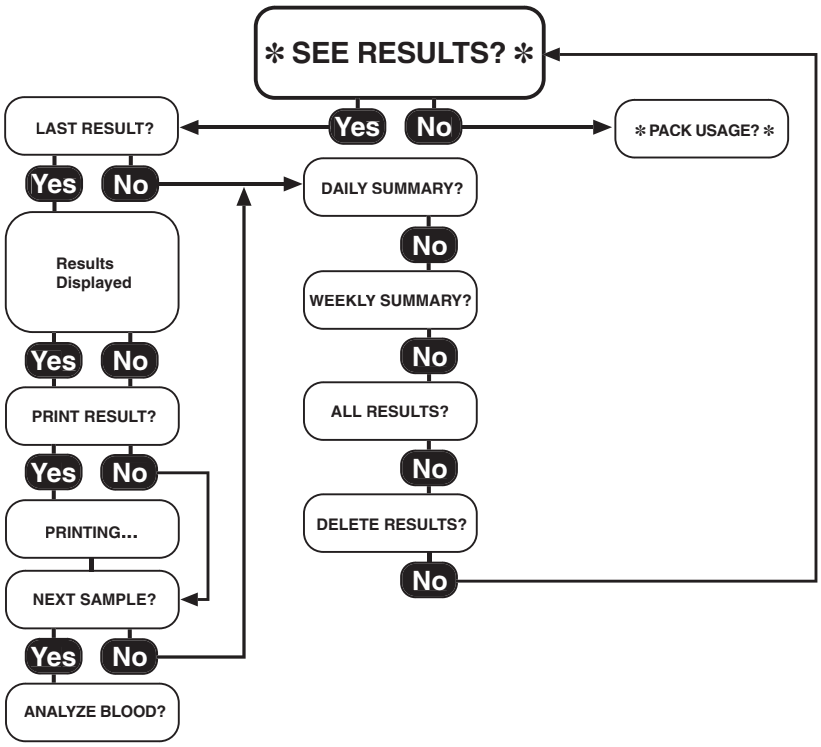

Last Result?

Last result is displayed and printed.

Daily Summary?

Last day's results are printed.

Weekly Summary?

Last 5 days' results are printed.

All Results?

The EasyLyte has a data storage and retrieval capability of 125 patient results. All results from the oldest day will be deleted when the storage capacity has been reached. Therefore, it is important to request a printout of data as the storage capacity is approached if you desire to retain a copy of all the stored results.

Delete Results?

If you wish to empty the stored results, you may do so by pressing yes to **DELETE RESULTS?**.

Pack Usage?

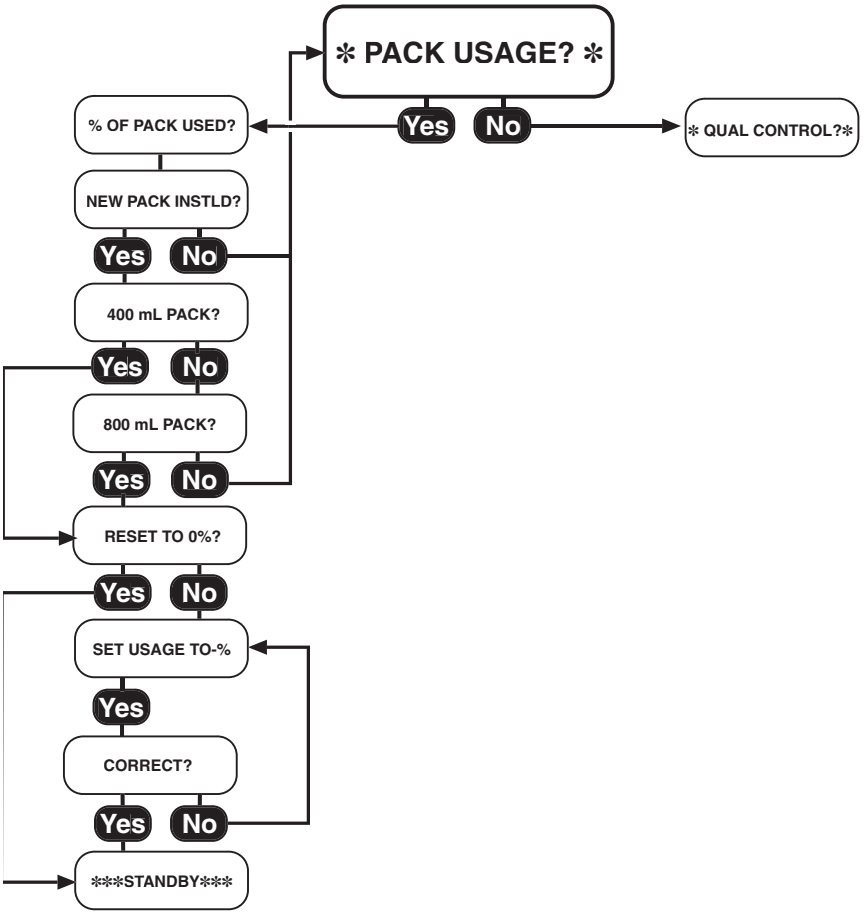

Pack Usage %

The EasyLyte monitors fluid consumption automatically. The percentage of the solutions pack that has been consumed is printed each morning at the first calibration.

Upon answering yes to ***PACK USAGE?***, the percentage of the solutions pack that has been consumed is displayed and printed. The EasyLyte will indicate **SOL'N PACK LOW!** when 88% of the solutions pack has been consumed. When 99% of the solutions pack has been consumed, the EasyLyte will instruct the operator to **CHANGE PACK!** (the message will display but not print). The EasyLyte will not allow further analysis until a new solutions pack has been installed.

Installing New Pack

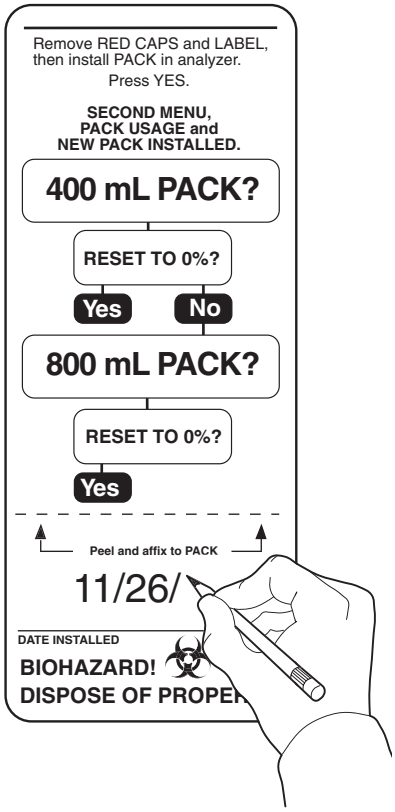

1 Removal and disposal of empty pack: To install a new solutions pack, first remove the empty pack from the EasyLyte (do not squeeze the pack). Place the red caps over the 4 pack connectors and discard.

WARNING: The used solutions pack contains human blood products which may be contaminated with HIV or other pathogens. Handle and dispose of properly.

2 Installing New Pack: Remove the new solutions pack from the shipping container. Remove the orange label from the front of the solutions pack. Record the date on the tear off tab and affix to the front of the solutions pack. This records the solutions pack installation date. Remove the 4 red caps.

Install the new solutions pack until it fits firmly into the solutions valve.

The EasyLyte has an internal counter which keeps track of the solutions pack usage. The % counter must be set to zero (0) each time a new pack is installed. This is done by answering yes to **NEW PACK INSTLD?** Select either a 400 mL or 800 mL solutions pack, depending on the solutions pack being used. The display will ask **400 ML PACK?**. If installing a 400 mL pack answer yes. If you press no, the display asks 800 mL PACK?. Answer yes to **RESET TO 0%** for the solutions pack you are actually installing. The analyzer will then automatically enter ******STANDBY******. When the EasyLyte is recalibrated it will automatically purge the fluid lines of the new solutions pack to insure a successful calibration.

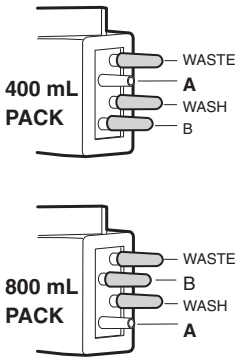

▲ Note that the location of the Standard A port on the 400 mL solutions pack differs from the Standard A port location on the 800 mL pack. If the solutions pack setting in ***PACK USAGE?*** (400 mL or 800 mL) does not match the actual solutions pack installed, the EasyLyte will not calibrate correctly. In this situation, the EasyLyte electrode **CAL VALUES** will be negative. Return to ***PACK USAGE?*** and correct the setting.

The operator can adjust the **SOLUTIONS PACK %** usage if installing a previously used solutions pack. Answer no to **RESET TO 0%** and the display will show **SET USAGE TO 00%**. The operator changes the flashing number by pressing no. To advance to the next column, press yes. When the number installed is correct, answer yes to **CORRECT?**. The EasyLyte will then enter ******STANDBY******.

★ Do not use outdated solutions packs. Refer to the solutions pack label for use life information. Do not use reagents other than the EasyLyte solutions pack.

★ The electrodes must be exposed to EasyLyte reagents at all times. Failure to have a solutions pack in place could damage the electrodes. Any time the Solutions pack is removed from the EasyLyte, a **SOL'N PURGE?** is required to re-prime the system. Proceed to ***OPER FUNCTS?*** and press yes to **SOL'N PURGE?**.

Quality Control?

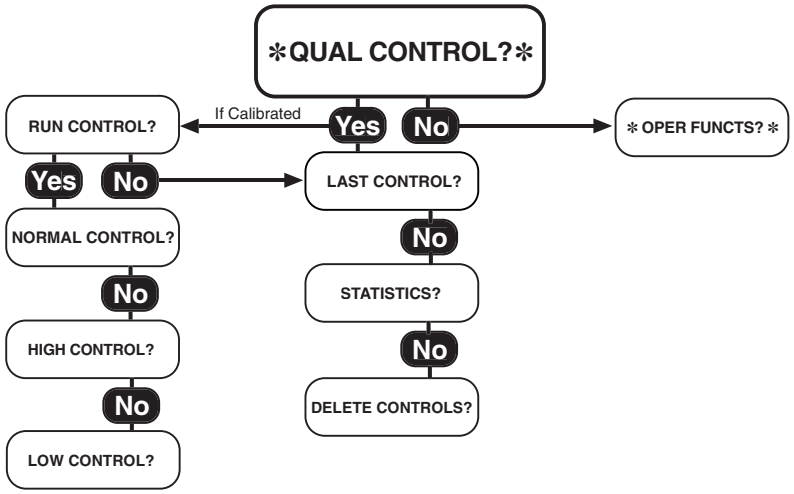

Quality Control:

Use Medica's Quality Controls on a daily basis to verify the accuracy and precision of your analyzer. If the EasyLyte is calibrated and your quality control results are within specified range, you can be confident in the results obtained.

Recommended Material:

Low, Normal, High Assayed Control

Medica's EasyLyte controls are prediluted and ready to use.

Recommendation:

Run all control levels daily. Data may be stored in memory for future statistical analysis.

Use Instructions:

Follow the instructions as detailed on the package insert sheet provided with the Quality Control material.

Storage and Stability:

Refer to the package insert sheet provided with the Quality Control material.

Expected Results:

For the expected results, please see the package insert provided with your Quality Control Kit.

★ Do not use control materials containing ethylene glycol and other stabilizers, as they may give incorrect results and/or damage the EasyLyte.

Run Control?

Answer yes to **RUN CONTROL?** and select normal, low or high control level. Run the control and review the data. To accept the data, answer yes to **STORE RESULTS?** when it appears. Answer no and the result will not be stored in memory.

Last Control?

Answer yes, and the last control result will be displayed and printed.

Statistics?

Answer yes to **STATISTICS?** to display and/or print the mean, standard deviation, and coefficient of variation for the stored control results. The EasyLyte will store and calculate statistics on up to 20 normal, 20 low and 20 high results. The EasyLyte will compute the mean, standard deviation, and the coefficient of variation on a minimum of 5 stored results.

Definitions:

Mean: The mean is the average of a set of data, the value derived by dividing the sum of the observations by the number of observations in the set.

S.D.: The standard deviation is a statistic used to measure dispersion within a distribution of data.

C.V.: The coefficient of variation is a measure of the % variation from the mean within a given set of data; it is equal to the S.D. divided by the mean, then multiplied by 100.

Delete Controls?

★ This function deletes all stored data from memory. If memory is filled, the oldest stored value will be deleted with each new value that is stored.

▲ Medica provides two Quality Control Kits, a tri-level and a two level, normal and abnormal (High). EasyLyte customers that have three level control capability in the ***QUAL CONTROL?*** menu can use either Kit. EasyLyte customers that have two level control capability, **NORMAL?** and **ABNORMAL?,** should continue to use the two level kit only. EasyLyte customers using the Easysampler are limited to use of two control levels.

Operator Functions?

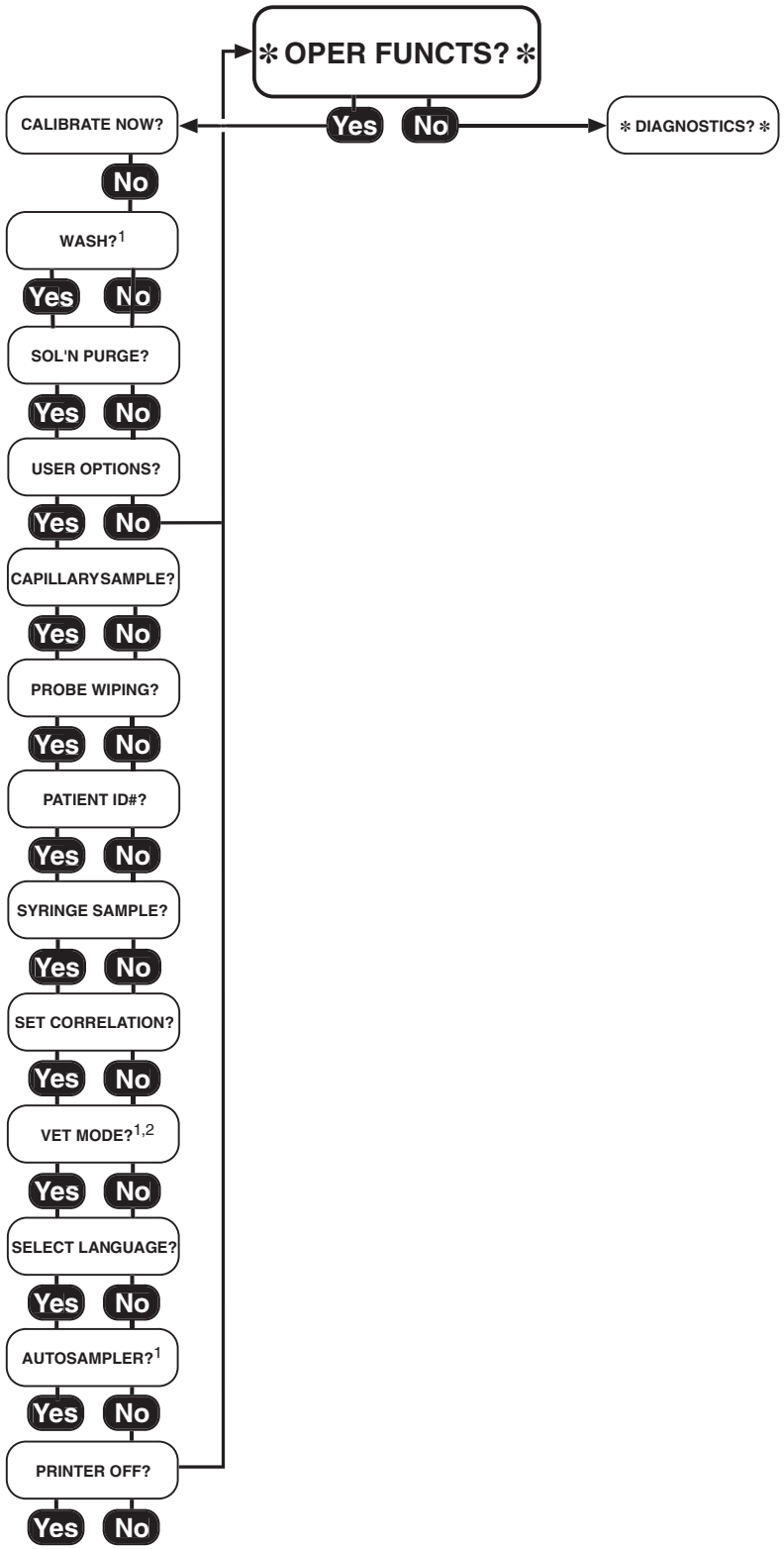

[1] Not available for Na/K/Ca/pH analyzer
[2] Not available for Na/K/Li analyzer

OPERATOR FUNCTIONS?

Allows the operator to initiate key analyzer functions "on demand" as required.

CALIBRATE NOW?

Allows operator to perform a calibration of the analyzer.

WASH? (not available for Na/K/Ca/pH analyzer)

The Wash Solution contains ammonium bifluoride which is aspirated from the solutions pack and utilized to condition the sodium electrode. Once the analyzer has completed a **WASH?** cycle, it automatically goes into ***STANDBY***. A calibration is required to return to **ANALYZE BLOOD?** from ***STANDBY***. The sodium electrode in the Na/K/Ca/pH analyzer is conditioned using the Daily Rinse Solution.

SOLUTION PURGE?

Purges any air that might be in the fluid lines to insure reagents are primed and ready for sample analysis. This procedure is required first whenever the solutions pack is removed and reinstalled. After purging, calibration is required to return to **ANALYZE BLOOD?**.

USER OPTIONS?

The operator may choose **CAPILLARY SAMPLE?**, **PROBE WIPING?, PATIENT ID#?**, **SYRINGE SAMPLE?**, **SET CORRELATION?**, **VET MODE?**, **SELECT LANGUAGE?**, **AUTOSAMPLER?**, **OR PRINTER OFF?**.

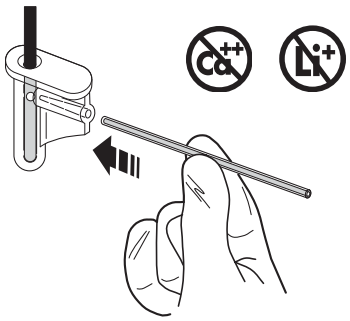

CAPILLARY SAMPLE?

Answering yes to **CAPILLARY SAMPLE?** allows the operator to analyze samples using Medica's Capillary Adapter Kit. Once this mode has been activated, the message **CAPILLARY SAMPLE?** will appear after answering yes to **ANALYZE BLOOD?**. Press yes and the sample probe will descend. **INSTALL ADAPTER/ADAPTER INSTAL'D?** is displayed. Gently push the capillary adapter onto the EasyLyte sample probe. Then press yes.

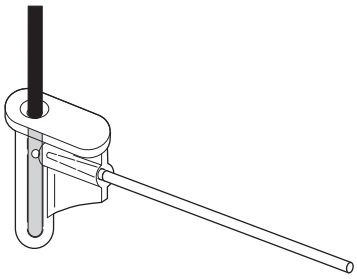

INSERT CAPILLARY/CAPILL INSERTED? is displayed. Draw the sample into a 60 µL minimum capillary tube and insert the capillary tube into the capillary adapter. When the capillary tube is in place, press yes and the sample is aspirated. The EasyLyte will beep and display **REMOVE CAPILLARY**, then **REMOVE ADAPTER**. After 5 seconds, the sample probe will retract and sample analysis will begin.

Probe Wiping?

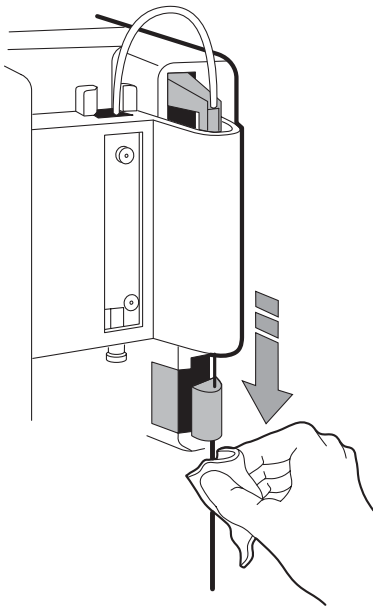

Answering yes to **PROBE WIPING?** will institute a 5 second delay in the retraction of the sample probe after sample aspiration. This delay allows the operator to manually wipe the sample probe prior to analysis, using a paper towel, gauze pad, tissue or other absorbent material. The following display screens appear if **PROBE WIPING?** has been activated:

ANALYZE BLOOD? / PROBE IN BLOOD? / ASPIRATING / REMOVE SAMPLE / WIPE PROBE / ANALYZING ...

A "beep" sound will alert the operator to remove the sample and wipe the sample probe before the sample probe retracts. The use of the probe delay is not necessary if a probe wiper is utilized.

★ Using this option or a probe wiper is critical. It is extremely important that the sample probe not carry blood, serum, or any fluids from its exterior surface into the solutions valve. These fluids can dry inside the solutions valve and cause binding friction when the sample probe moves through the solutions valve for subsequent sample analyses. This situation can create "Air" or "Fluid Path" errors.

Patient ID#?

Answering yes to **PATIENT ID#?** allows the operator to assign a four digit patient Identification Number to the sample. This ID # will be printed with the patient result. If PATIENT ID#? is selected, the patient ID# can be entered after a yes response to **ANALYZE BLOOD?** A cursor appears under the first digit.

0 0 0 0

Pressing the no button changes the number. Once the number is correct, press the yes button and the cursor moves to the second digit. Repeat this process for the remaining digits. When **CONTINUE?** appears on the display, press yes to allow analysis to proceed or no to re-enter the ID numbers.

Answer no to **PATIENT ID#?** and the sample results will be numbered sequentially.

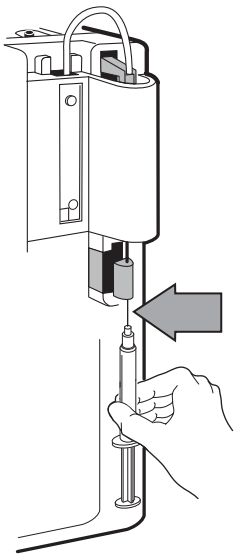

SYRINGE SAMPLE?

Answering yes to **SYRINGE SAMPLE?** instructs the sample probe to stop in a position to allow for syringe sampling. To utilize the syringe sampling position, it is necessary to remove the probe wiper. When the EasyLyte says **PROBE IN BLOOD?**, place the syringe (without needle) over the sample probe, insuring that the probe hole is beneath the surface of the sample in the syringe. Once the sample has been aspirated, the EasyLyte will beep and instruct the operator to remove the syringe and to wipe the sample probe before it ascends into the solutions valve.

To return to vacutainer or cup sampling, return to **USER OPTIONS?** and answer no to **SYRINGE SAMPLE?**. Then reinstall the probe wiper.

SET CORRELATION?

This feature allows the operator to obtain patient values on the EasyLyte system equivalent to values determined by other devices measuring electrolytes. (Serum is preferable for Na/K/Cl and Na/K/Li. Whole blood is preferable for Na/K/Ca/pH.) Press yes to **SET CORRELATION?. CORRELATE BLOOD?** is displayed. Press yes to view and/or change the established correlation equations.

▲ If the laboratory wishes to establish its own correlation equations, the laboratory should measure a minimum of 10 patient samples in the low abnormal, normal and high abnormal reference range for each analyte on both the EasyLyte analyzer and the comparison analyzer, and perform a regression analysis of the data. Failure to measure patient samples over the entire measurement range will result in unreliable correlations.

The Na^+ established correlation equation will be displayed first, where X equals the standard EasyLyte ISE measurement obtained when the correlation mode is off. To change this equation, answer no to **CORRECT?**. Change the established equation by pressing no to change the number above the cursor, and by pressing yes to advance the cursor. If no change is desired with the established correlation, press yes until the equation leaves the display screen. Follow the same procedure for the K^+, Cl^-, Li^+, Ca^{++} and pH equations.

The established blood correlation equations are:

$Na^+ = 0.99X - 1.10$
$K^+ = 1.02X - 0.24$ } Correlated to the flame photometer
$Li^+ = 1.00X + 0.00$

$Cl^- = 0.95X + 3.46$ Correlated to the chloridometer

$Ca^{++} = 1.00X + 0.00$

$pH = 1.00X + 0.00$

If a change is made to the established correlation equation, the calculated result will also change. Verify that any new equations are accurate.

Next, **CORRELATE URINE?** is displayed. Follow the same procedure as above. The factory set urine correlation equations are:



$Na^+ = 1.00X - 0.0$

$K^+ = 1.00X + 0.0$

$Cl^- = 1.00X + 0.0$

(No urine correlations established)

The EasyLyte will print **BLOOD/URINE CORRELATION ON**, and all correlation equations will be printed. Analysis results tested in the **ANALYZE BLOOD?** or ***ANALYZE URINE?*** menu will be printed as **CORRELATED VALUES**. Quality Control samples tested in the ***QUAL CONTROL?*** menu are not affected when the correlation equations are turned on.

To return to standard analysis results, the operator must return to **SET CORRELATION?** and press yes. When **CORRELATE BLOOD?** or **CORRELATE URINE?** is displayed, press no to return to standard analysis. The EasyLyte will print **CORRELATION OFF**. When this change is made, results obtained prior to the change are not adjusted (i.e. a printout of past results will be reported with the values selected when the analysis took place). The operator may wish to adjust the Normal Range values when using the **SET CORRELATION?** equations. The ranges can be adjusted by proceeding to ***DATE/ RANGES?*** and answering yes to **RANGES?**.



Vet Mode

The **VET MODE?** sets the EasyLyte to measure animal whole blood, serum or plasma specimens. When **VET MODE?** is selected, urine specimen analysis is not available. Within **VET MODE?**, the normal ranges listed in the ***DATE/RANGES?*** section represent animal ranges. After answering yes to **ANALYZE BLOOD?**, the EasyLyte asks the operator for the sample species. The operator must select from:

CANINE? (dog)

FELINE? (cat)

EQUINE? (horse)

BOVINE? (cow)

PORCINE? (pig)

OTHER?

Simply answer yes to the correct species. The EasyLyte will then analyze the sample. The sample result will be compared to the normal range for that species. The EasyLyte will print the species type for each sample. The **VET MODE?** normal ranges are:

	Na	**K**	**Cl**
Canine	145.0–155.0	2.70–5.00	96.0–122.0
Feline	143.0–156.0	3.50–5.20	108.0–128.0
Equine	137.0–148.0	2.80–5.10	99.0–109.0
Bovine	143.0–151.0	4.10–5.30	97.0–111.0
Porcine	135.0–150.0	4.40–6.70	94.0–106.0
Other	The operator can assign a normal range for any other species under ***DATE/RANGES?***		

To return to human sample analysis, return to **VET MODE?** and press no.

Select Language?

Press yes to **SELECT LANGUAGE?**, then press no until the desired language is displayed. Then press yes. **PLEASE CONFIRM!** is displayed. To activate the language selected, press yes. The EasyLyte will immediately display and print messages in the new language. To change the language again, the operator must re-enter **USER OPTIONS?** (in the selected language) and proceed to **SELECT LANGUAGE?**.

Autosampler?



To operate the EasyLyte with the EasySampler system, first connect the EasyLyte to the EasySampler following the instructions in the Automated Sampling section of this manual. Then follow the procedure below. If the EasyLyte is operating without the EasySampler, always answer no to **AUTOSAMPLER?**.

1 Press yes to **AUTOSAMPLER?**.

2 **SAMPLR CONNECTED?** is displayed. Verify that the autosampler cable is connected to the back side of the EasyLyte and press yes.

3 **PLEASE CONFIRM!** is displayed. Press yes.

4 **ONE MOMENT...** is displayed. The EasyLyte will print:

AUTOSAMPLER

Na/K... auto

MODE 00A

5 Wait until **ALIGN PROBE/CUP?** is displayed. Return to the Automated Sampling section of this manual to complete the installation.

If the **AUTOSAMPLER?** feature is activated, but the Easysampler is not connected to the EasyLyte, the EasyLyte will display **** Na/K... AUTO**** and beep repeatedly for 30 seconds, before displaying **ERROR**. The operator must connect the Easysampler, or return to **AUTOSAMPLER?** and answer no to eliminate this communication error.

The EasyLyte will then instruct the operator to "disconnect" the Easysampler from the EasyLyte.

▲ Whenever the **AUTOSAMPLER?** feature is switched on or off, the EasyLyte printer will print the change. The EasyLyte defaults to the **400 mL SOLUTIONS PACK** setting. If the installed solutions pack is 800 mL, the operator must enter ***PACK USAGE?*** and activate the **800 mL?** setting before calibrating the EasyLyte. The operator must recalibrate the EasyLyte each time the **AUTOSAMPLER?** is switched on or off.

Printer Off?

If the EasyLyte runs out of printer paper, press yes to **PRINTER OFF?** to deactivate the printer. This will prevent damage to the printer head mechanism until a new roll of paper is installed in the printer. The printer will not print any data until the operator returns to **PRINTER OFF?** and presses no.

Diagnostics?

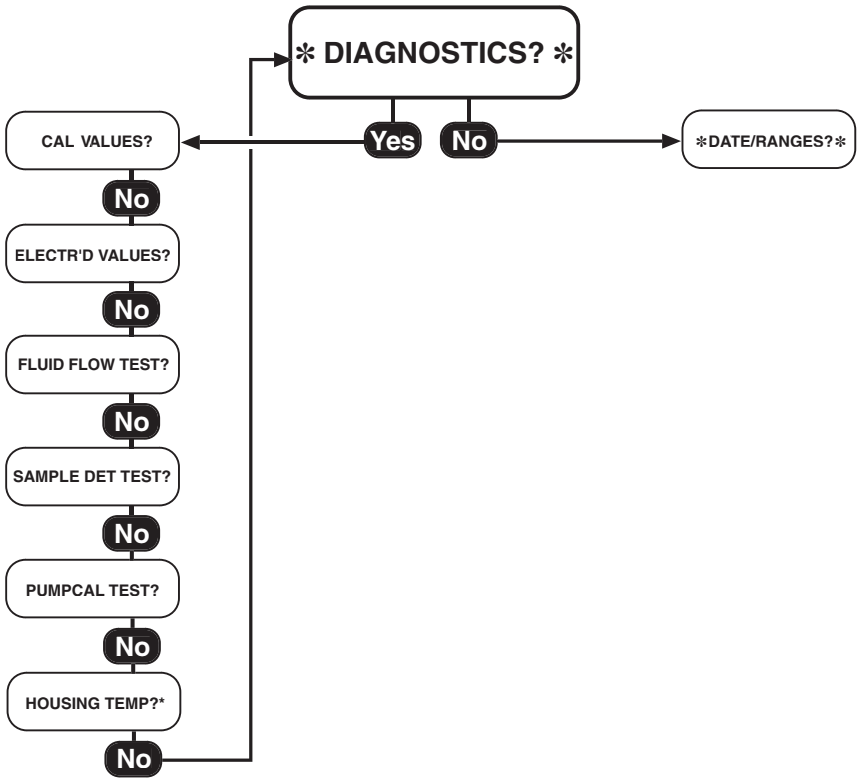

The Diagnostics routine permits the operator to check and test key operating functions of the EasyLyte.

The Troubleshooting Section will suggest the use of these tests to aid in identifying any potential problems.

	FUNCTION	TEST
1	Check last calibration values.	Last Cal Values
2	Direct electrode millivolt readings.	Electrode Values
3	Fluid being pulled into the Electrode Housing.	Fluid Flow Test
4	Sample detector is detecting the sample.	Sample Detector Test
5	Correct reagent movement through valve.	Pump Cal Test
6	*Electrode Housing Temperature	Housing Temperature

*Calcium only

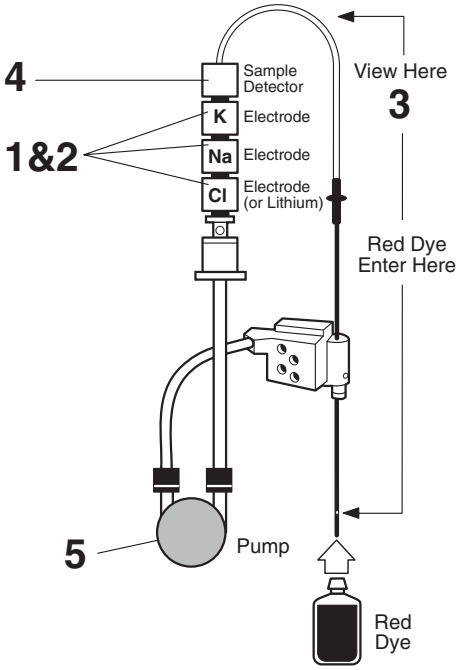

Calibration Values

Calibration values are the electrode response values (slopes) during the last calibration. Acceptable ranges are as follows:

Na^+: 50-64

K^+: 50-64

Cl^-: 40-64

Li^+: 50-66

Ca^{++}: 20-34

pH: 45-64

Electrode Values

Electrode values are direct millivolt readings for the electrodes.

Fluid Flow Test

The operator can visually confirm if fluid is being aspirated through the analyzer from the Sample Probe through the waste port of the Solutions Pack. This test is particularly important when troubleshooting flow-related problems. If this test is successful, the flow problem is limited to the solutions pack, solutions valve, or sample probe. A red test dye solution is provided in the Troubleshooting Kit. Answer yes to **FLUID FLOW TEST?** and run the red test dye as a sample. If fluid flow and proper sample positioning is achieved, the EasyLyte will display **FLOW TEST OK**, indicating that the EasyLyte is assembled correctly and free of obstructions.

Sample Detector Test

The sample detector detects the difference between air and liquid. Answering yes to **SAMPLE DET TEST?** will initiate a test of the sample detector's performance. The EasyLyte will pump Standard A from the solutions pack in front of the sample detector, followed by air. A **SAMPLE DETECT OK** result will confirm a functional sample detector. At the completion of the test, two sample detector values will be printed, one for Standard A and one for Air. The difference between the values must be 50 or greater for a successful test. If Standard A is not present this test will fail, indicated by **SAMPLE DETECTOR!** The EasyLyte must be free of flow problems for the results of this test to be considered useful. If this test should fail, see sample detector troubleshooting.

Pump Calibration Test

The pump is calibrated to turn the correct number of revolutions to move the reagents from the solutions pack to the electrodes. Answer yes to **PUMPCAL TEST?**, the rest is automatic. If the pumpcal is OK the EasyLyte will confirm **PUMPCAL OK**. At the completion of a successful test, the pumpcal values will be printed. The expected pumpcal values are between 500 and 1000. If **PUMPCAL FAILURE!** appears, repeat this test. If failure persists, refer to Troubleshooting.

Housing Temperature (Na/K/Ca/pH only)

The heated electrode housing is set to keep the electrodes at 37°± 0.1°C. Answer Yes to **HOUSING TEMP?** and the EasyLyte will display the housing temperature between 33.7–38.0°C. The acceptable temperature range is 36.9–37.1°C. If the displayed temperature is outside this range, wait 5 minutes and check again. If the temperature remains lower or higher than this range, contact your EasyLyte dealer.

Date/Ranges?

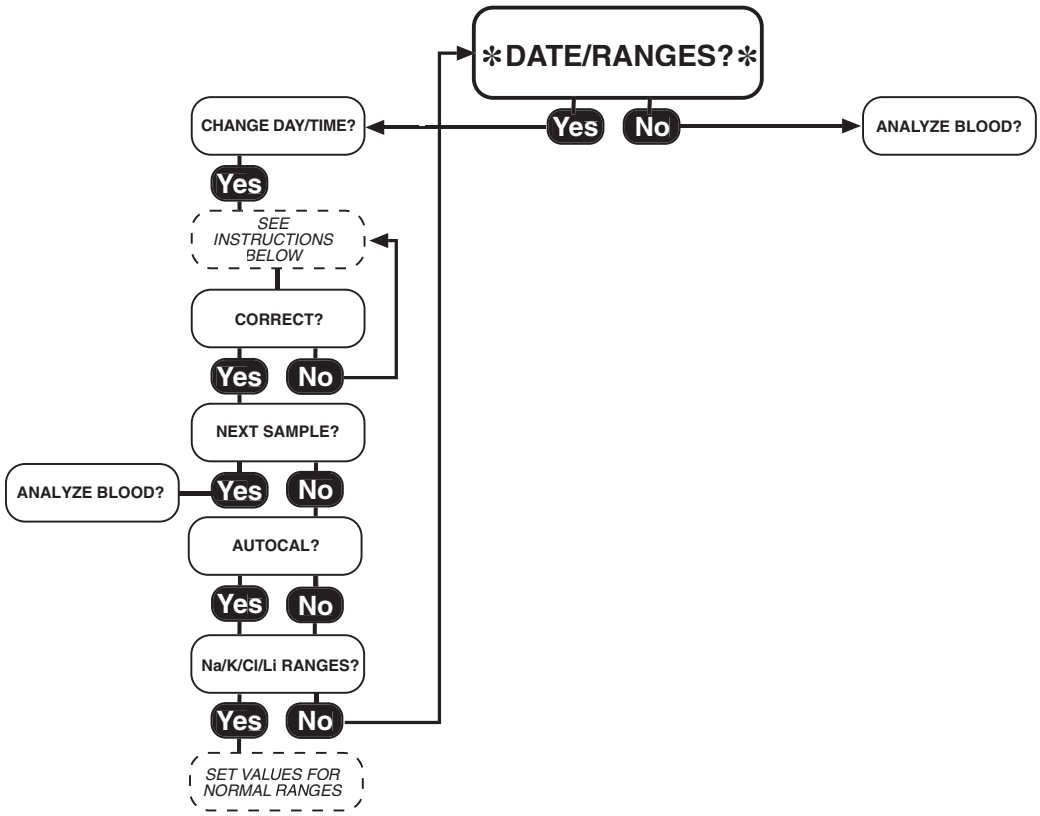

Change Day/Time

Answering yes to **CHANGE DAY/TIME?** allows you to change the date and time. The cursor appears beneath the month. Answering no advances the month. Once the correct month appears, answer yes and the cursor moves on to the day, then year and time. Each time, answer no to change the month or number above the cursor until the correct information appears, then answer yes to advance the cursor. If you make a mistake, advance the cursor by pressing the yes button until **CORRECT?** appears. Answering no allows you to correct your mistake. Once the data is correct, answer yes to **CORRECT?**. **NEXT SAMPLE?** will appear. Press no and **AUTOCAL?** will appear.

Auto Cal?

The EasyLyte is factory set to calibrate each day at 7:00 AM, EST, provided that **DAILY CLEANER?/DAILY RINSE?** was performed at the end of the most recent day that samples were tested. The operator, if desired, can set the autocalibration to occur at another hour. Answer yes to **AUTOCAL?** and the EasyLyte will display **CHANGE HOUR?**. To change the hour, press the yes button, and the hour is displayed. Press the no button until the desired hour is obtained (01:00 to 23:00).

To advance to the next column, press yes. When finished, press yes to **CORRECT?**. Answer no to **AUTOCAL?** and the EasyLyte asks **AUTOCAL OFF?**. To turn off the autocalibration, press yes. The operator must return to **CALIBRATE NOW?** to initiate a calibration.

Ranges?

The EasyLyte software program contains factory-set "normal" ranges for the test parameters. Analysis results falling above or below the range will be displayed and printed as low or high. Answer yes to **RANGES?**. Answer yes to **BLOOD NA LIMITS?** to view the sodium range. The operator can modify the pre-set range to establish the laboratory's own "normal" ranges. A cursor will flash below the first digit to the left. Answering no will change the digit incrementally. Continue this process until the desired number appears, then answer yes to advance the cursor to the next number. Continue this procedure until the desired range is established. Press yes to **CORRECT?** to advance to the next range.

Pre-set Ranges:

Na^+	Blood	135.0	–	148.0	mmol/L
K^+	Blood	3.50	–	5.30	mmol/L
Cl^-	Blood	98.0	–	107.0	mmol/L
Li^+	Blood	0.30	–	1.20	mmol/L
Ca^{++}	Blood	1.13	–	1.32	mmol/L
pH	Blood	7.35	–	7.45	units
nCa	Blood	1.10	–	1.35	mmol/L
Na^+	Urine	40.0	–	220.0	mmol/L
K^+	Urine	25	–	120.0	mmol/L
Cl^-	Urine	110.0	–	250.0	mmol/L
Li^+	Urine	(not applicable)			

★ The above ionized calcium (Ca^{++}) range is based on a pH between 7.35–7.45 units.

- For Urine Ranges, a 24 hour urine collection of approximately one liter is assumed.
- Due to the sensitivity of the lithium electrode to abnormal concentrations of sodium ions in some patient samples, if the sodium electrode Cal value is unacceptable, or if a measured sodium value is less than 100 mmol/L or greater than 200 mmol/L, the Lithium value will not be reported. The EasyLyte will display ***** in place of the Lithium value.

4. Sample Handling and Collection

Warning: Human body fluid specimens may be contaminated with HIV or other pathogens. Treat all specimens and collection devices and tools as biohazardous materials.

Whole Blood



Whole blood specimens should be drawn carefully to avoid hemolysis. Elevated potassium values may indicate a hemolyzed specimen; if hemolysis is suspected, a new sample should be drawn and analyzed. Finger stick methods should be avoided since they can result in elevated potassium values.

1 Collect the specimen by venipuncture into a Lithium-Heparin or Sodium-Heparin (green-topped) evacuated blood collection tube. For Lithium analysis, a Sodium-Heparin (green-topped) tube must be used. Do not use ammonium heparin, EDTA, or NaF tubes. Note the time of collection.

2 Mix the specimen by inverting and rotating the tube. Do not shake.

3 Analyze specimens within one hour of collection; beyond this time falsely elevated potassium levels may be obtained.

4 For analysis on Na/K/Ca/pH analyzers, specimens should be measured within 20 minutes of collection, or store sample on ice for up to 60 minutes. Falsely reduced calcium levels may be obtained if these time limits are exceeded.

Serum (Not recommended for Na/K/Ca/pH analyzer)

1 Collect the specimen by venipuncture into an untreated (red-topped) tube. Fill the tube to at least 2/3 of the total volume. Note the time of collection.

2 Let blood stand for 20-30 minutes to allow clot formation.

3 Rim the clot with an applicator stick, then centrifuge the tube for 10–15 minutes and remove the serum to a clean specimen tube.

4 Serum may be analyzed immediately, stored at 4°C for 24 hours, or frozen at -20°C for up to one week. Samples must be brought to room temperature and mixed well before assaying.

Serum or plasma drawn 8–10 hours after an oral dose of lithium is the specimen of choice for routine monitoring of lithium levels.



To obtain accurate results, samples should be free of any clots, fibrin, etc., which would obstruct sample flow and affect results. The use of a serum clearing agent is strongly recommended.

If a serum separator tube is utilized, care must be taken to avoid inserting the sample probe into the gel layer. This can create obstructions in the sample probe and electrodes.

★ Plasma samples offer no advantage over whole blood specimens for stat analysis. If the sample is to be stored, serum specimens are preferable.

★ **Plasma** (Not recommended for Na/K/Ca/pH analyzer)

1 Collect the specimen by venipuncture into a Lithium-Heparin or Sodium-Heparin (green-topped) evacuated blood collection tube. The heparin level should not exceed 15 IU per mL of tube volume. For Lithium analysis, a Sodium-Heparin (green-topped) tube must be used. Do not use ammonium heparin, EDTA, or NaF tubes. Note the time of collection.

2 Mix the specimen by inverting the tube. Do not shake.

3 Centrifuge the specimen within one hour of collection. Carefully remove the top plasma layer for analysis. Use a Pasteur pipette or a syringe fitted with a blunt-tipped needle for this procedure.

4 Analyze plasma samples within 4 hours of collection. Refrigerated samples must be brought to room temperature and centrifuged prior to analysis.

Syringe Sampling

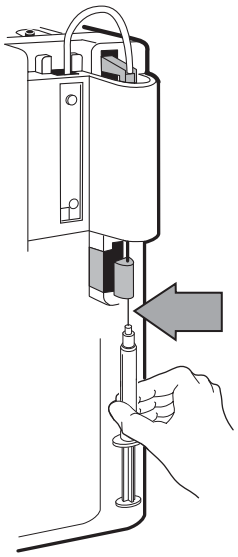

When using Sodium-Heparin collection syringes, collect a full syringe of specimen to minimize the effect of sodium heparin on the EasyLyte sodium measurement. Certain circumstances may arise in which a sample will be more difficult to obtain, e.g., an oncology patient. In this case a pretreated syringe can be used. Carefully follow these instructions.

1 Draw into a 5 or 10cc syringe approximately 0.1 mL of Sodium Heparin (1000 IU/mL). Invert and rotate syringe to coat interior walls and slowly expel excess heparin.

2 Draw the sample by venipuncture into syringe.

3 Invert and rotate syringe to mix the blood with the heparin.

4 Discard needle and cover the syringe with a luer cap.

5 Analyze specimens within one hour of collection.

A syringe with little or no "dead space" must be used to avoid errors. See **SYRINGE SAMPLE?** under ***OPER FUNCTS?***.

Urine

For complete sample preparation and storage information, the user should refer to the standard Clinical Chemistry procedures published by NCCLS.

1 Follow standard clinical procedures for collection of random and 24-hour urine specimens.

2 Refrigerate urine specimens until time of analysis.

3 Centrifuge urine specimens to remove cellular matter, crystals, etc.

4 Dilute the urine specimen with one part of the supernatant to 9 parts of Urine Diluent. Urine must be diluted. Do not attempt to analyze undiluted urine.

Expected Values

The values given in the Table below[1,2] are intended to be used only as a guide. Each laboratory or testing site should establish its own range of normal values, taking into account factors such as age, sex, diet, and other determinants of electrolyte levels.

Whole Blood, Serum, Plasma (mmol/L or mEq/L)

Sodium	(Na^+)	135 to 148
Potassium	(K^+)	3.5 to 5.3
Chloride	(Cl^-)	98 to 107
Lithium	(Li^+)	0.30 to 1.20
Calcium	(Ca^{++})	1.13 to1.31
pH		7.35 to 7.45 units
Normalized Calcium	(nCa)	1.10 to 1.35

Urine (mmoL/L or mEq/L)

Sodium	(Na^+)	40 to 220
Potassium	(K^+)	25 to 120
Chloride	(Cl^-)	110 to 250
Lithium	(Li^+)	(not applicable)

1. Tietz, N.W. (ed.) Fundamentals of Clinical Chemistry, 2nd ed. (1976), p. 875-77
2. Geigy Scientific Tables, Col. 3, 8th edition

5. Maintenance

The EasyLyte is designed to require very little operator maintenance. The only daily maintenance required is to run the Daily Cleaning/Daily Rinse Solution after the last sample of the day. Remember to use a probe wiper or the **PROBE WIPING?** option at all times. All other maintenance is performed by replacing the components as described in the schedule below. When you wish to perform routine or any other maintenance function, put the EasyLyte into ***STANDBY***. When maintenance is completed, press no to ***STANDBY*** and proceed to **SOL'N PURGE?** in ***OPER FUNCTS?***. After a purge is completed, a calibration will be necessary to return to **ANALYZE BLOOD?**.

Complete instructions for replacement are found in the Installation/Replacement section of this manual.

When complete chassis cleaning or analyzer storage is necessary, select **STANDBY** from the **SECOND MENU?**.

RECOMMENDED MAINTENANCE/REPLACEMENT SCHEDULE

EVERY 6 MONTHS

	★ MEMBRANE ASSEMBLY	✔ (Guaranteed Use Life – 3 months)
	★ SAMPLE TUBE	✔ (Guaranteed Use Life – 3 months)
	★ SHORT SAMPLE TUBE[1]	✔ (Guaranteed Use Life – 3 months)
	★ PUMP TUBE	✔ (Guaranteed Use Life – 3 months)
	★ INTERNAL FILLING SOLUTION	✔ (Guaranteed Use Life – 3 months)
	DISPOSABLE REFERENCE ELECTRODE[1]	✔ Must replace every 6 months. (Guaranteed Use Life – 3 months)
	FLUSH SOLUTIONS VALVE	✔
	SOLUTIONS VALVE	Replace as required. (Guaranteed Use Life – 12 months)
	SAMPLE PROBE	Replace as required. (Guaranteed Use Life – 12 months)
	K^+ ELECTRODE	Replace as required. (Guaranteed Use Life – 6 months)
	Na^+ ELECTRODE	Replace as required. (Guaranteed Use Life – 12 months)
	Cl^- ELECTRODE	Replace as required. (Guaranteed Use Life – 6 months)
	Li^+ ELECTRODE	Replace as required. (Guaranteed Use Life – 6 months)
	Ca^{++} ELECTRODE	Replace as required. (Guaranteed Use Life – 6 months)
	pH ELECTRODE	Replace as required. (Guaranteed Use Life – 6 months)
	REFERENCE ELECTRODE	Replace as required. (Guaranteed Use Life – 12 months)
	SOLUTIONS PACK	Change SOLUTIONS PACK as required.
	PROBE WIPER	Replace after 100 serum/plasma samples, after 50 whole blood samples, or after 2 weeks of use, whichever comes first.

★ If analyzing 100 or more samples per week, replace these items every 3 months.

[1] Na/K/Ca/pH only

6. Analyzer Surface Cleaning/Storage

After the analyzer enters the standby mode, proceed with component removal, surface cleaning, and replacement of components. Refer to Installation and Replacement.

Clean the analyzer with a 10% bleach solution. Apply the solution to a cloth to wipe down all outside surfaces. Always wear protective gloves and safety glasses when handling bleach.

Never allow diluted bleach to come in contact with the membrane assembly.

To store the EasyLyte analyzer and its components for several days or longer, follow these disassembly and storage instructions: ★

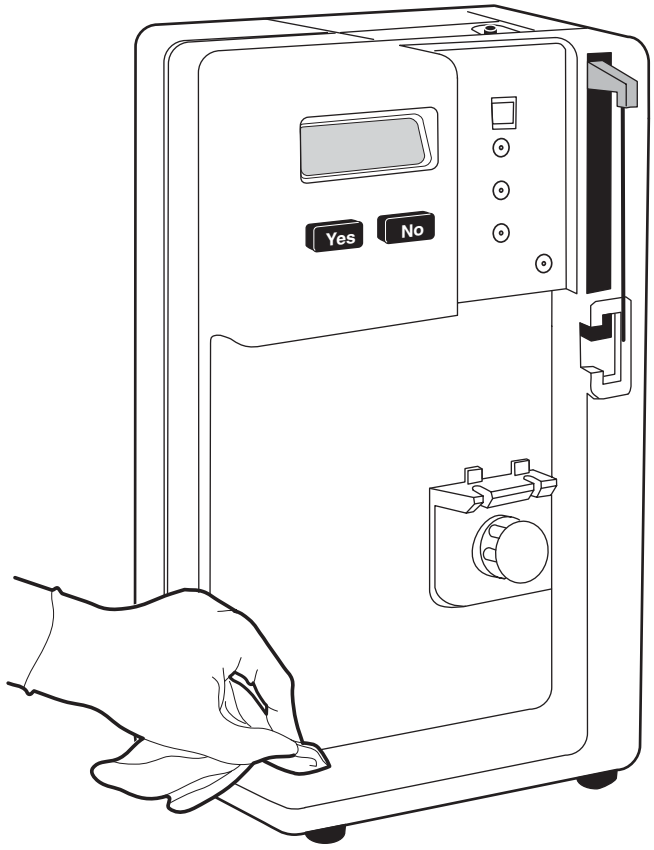



1 Remove the power cord from the back of the analyzer.

2 Remove the solutions pack and seal the four ports with red caps.

3 Remove the electrode housing and drain the internal filling solution.

4 Remove the electrodes from the housing and seal the electrode ports with red caps. Before sealing the K^+ and Ca^{++} electrode, insert a few drops of the red test dye solution into the red caps. The dye solution will slow down the "drying out" of the electrodes.

5 Disconnect the red end of the pump tube from the solutions valve. Unwind the pump tube from around the pump. Clean up any fluid spill from the pump tube.

6 Wipe dry the solutions valve surface and ports.

7 Reinstall the empty electrode housing on the EasyLyte.

8 Note the date the EasyLyte was stored.

If the EasyLyte electrodes remain stored as described above for more than 2 weeks, they may not function properly upon reinstallation. If this occurs, the electrode warranty will be void.

7. Principles of Operation

ISE Theory

Electrolyte measurements in blood products were traditionally performed using flame photometry[1], in which a sample, diluted with a known concentration of a reference ion (usually lithium or cesium), is aerosolized and passed through a flame which excites the cations. They re-emit the energy as light of different frequencies; the amplitude of this emission is proportional to the ion concentration in the sample. The development of sodium and pH-selective glass[2], and selective organic compounds for potassium[3], calcium[4] and chloride[5], has permitted the development of sensors capable of measuring biological fluids directly, throughout the physiological range. These sensors are known as Ion Selective Electrodes.

The EasyLyte measures sodium, potassium and chloride or lithium, or calcium and pH in biological fluids, using ion selective electrode technology. The flow-through sodium and pH electrodes contain glass tubing, specially formulated to be sensitive to sodium ions. The flow-through potassium and calcium electrodes employ a plastic tube, incorporating neutral carrier ionophores. The flow-through chloride electrode and Lithium electrode include a plastic tube, specially formulated to be selective to chloride or lithium ions. The potential of each electrode is measured relative to a fixed, stable voltage established by the silver/silver chloride reference electrode. An ion selective electrode develops a voltage that varies with the concentration of the ion to which it responds. The relationship between the voltage developed and the concentration of the sensed ion is logarithmic, as expressed by the Nernst equation:

$$E = E^{\circ} + \frac{RT}{nF} \text{Log } (g\,C)$$

where:
- E = The potential of the electrode in sample solution
- E° = The potential developed under standard conditions
- RT/nF = A temperature dependent "constant" termed the slope(s)
- n = 1 for sodium, potassium, chloride, lithium and pH
- n = 2 for calcium
- Log = Base ten logarithm function
- g = Activity coefficient of the measured ion in the solution
- C = Concentration of the measured ion in the solution

1. Mason, W.B. Flame photometry. in Clinical Chemistry: Principles and Techniques, 2nd R.J. Henry et al, eds., Harper and Row, Hagerstown, MD 1963
2. Eisenman, G. (ed) Glass Electrodes for Hydrogen and Other Cations, Marcel Dekker, New York, 1967
3. Stefanac, Z., Simon, W. Chimia, 20, 436, 1966.
4. Simon, W., Amman, D., et al, Anat. Chem., 1981 pp. 1970-1974.
5. Hartman, K., et al, Mikrochimica Acta, 1978, pp. 235-246.

A comparative method of measurement is utilized. First, the analyzer measures the potential developed when the sample is pumped through the Electrodes. Next, Standard A is pumped through the Electrodes. The difference in the two potentials is related logarithmically to the concentration of ions in the sample divided by their respective concentrations in the Standard solution. Since the difference in potentials and the concentration of the ions in the Standard solution are known, the analyzer can calculate the concentration of the ions in the sample solution, in accordance with the Nernst equation, rewritten as:

$E - E^\circ = S \log (Ci (x) / Ci (s))$ or $Ci (x) = Ci (s) \times 10^{\wedge} (E-E^\circ)/S$

where: E = ISE potential developed in sample solution

E° = ISE potential developed in the standard solution

S = Electrode slope calculated during calibration

Ci(x) = Concentration of ion "i" in the sample

Ci(s) = Concentration of ion "i" in the standard solution

"S", the slope, is determined during calibration using Standards A and B, which have known levels of ions.

Within the pH range of 7.2–7.6 units, the EasyLyte Calcium analyzer adjusts the ionized calcium results to the equivalent Ca^{++} value at a sample pH of 7.40. The EasyLyte Calcium prints this normalized (to pH 7.40) calcium value using the formula:

$nCa = Ca^{++} (pH=X) * 10^{-0.24*(7.40-X)}$ Where X is the measured pH.

When an automatic calibration is initiated, Wash Solution (ammonium bifluoride) is aspirated as required from the solutions pack to recondition the sodium electrode. The EasyLyte aspirates and measures Standard A, then Standard B. The EasyLyte finally aspirates additional Standard A solution and measures it. The two Standard A readings are compared for drift and each measurement is checked for instability (noise). The slope is calculated from the difference between the second Standard A reading and the Standard B reading. A slope that is outside built-in software limits will be flagged and displayed as low or high. The EasyLyte will detect excessive drift or noise and display the appropriate error message.

Electrode Measurement Diagram

Na/K; Na/K/Cl; Na/K/Li

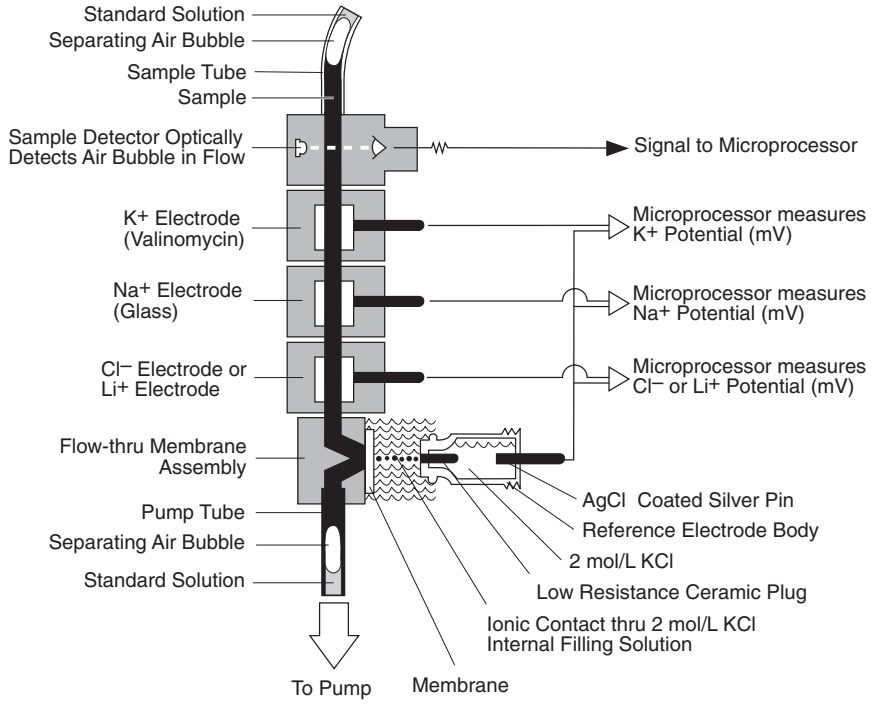

Na/K/Ca/pH

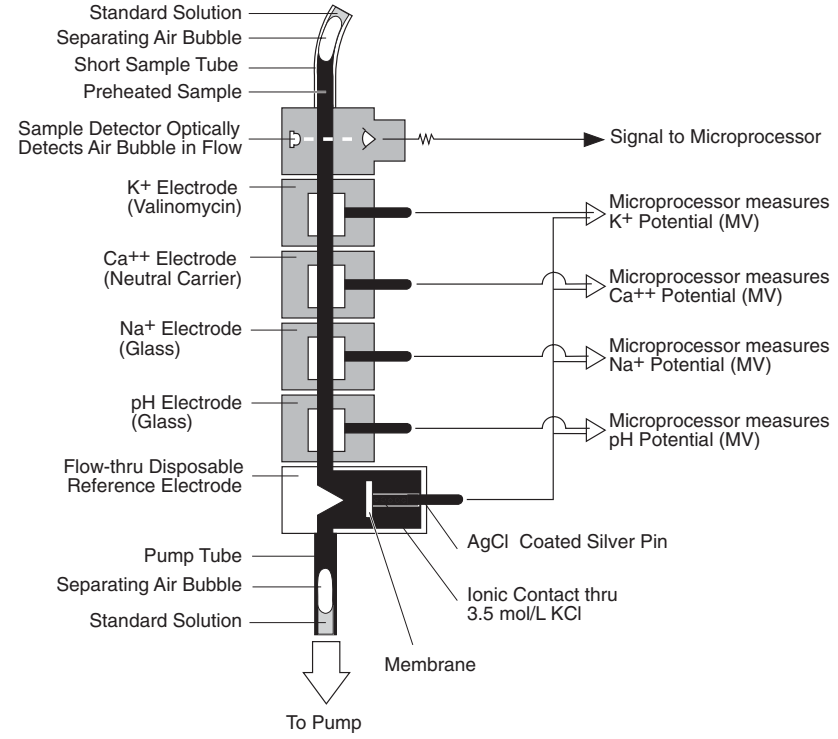

8. Specifications (Na/K, Na/K/Cl, Na/K/Li)

CLIA Classification:	Moderate Complexity			
Sample:	Whole Blood, Serum, Plasma or Urine.			
Sample Size:	100 µL Whole Blood, Serum, Plasma or 400 µL diluted (1:10) Urine, 60 µL capillary			
Method:	Direct measurement by Ion Selective Electrode (ISE)			
Detection Range:	Blood Na^+: 20–200 mmol/L		Urine Na^+: 25-1000 mmol/L	
	K^++: 0.2–40 mmol/L		K^+: 1.0-500 mmol/L	
	Cl^-: 25–200 mmol/L		Cl^-: 25-500 mmol/L	
	Li^+: 0.2–5.0 mmol/L		Li^+: (N/A)	
Display Resolution:	Na^+: 0.1 mmol/L	K+: 0.01 mmol/L	Cl^-: 0.1 mmol/L	Li^+: 0.01 mmol/L
Performance:	**Na^+**	**K^+**	**Cl^-**	**Li^+**
BLOOD, SERUM, PLASMA	80–200 mmol/L	1–10 mmol/L	80–200 mmol/L	0.2–2.0 mmol/L
Reproducibility (serum)	Performed according to a modified NCCLS protocol EP5-T2			
within run (n=20)				
mean (mmol/L)	140.1	4.46	102.5	0.75
C.V. (%)/SD (mmol/L)	0.4%	0.8%	0.5%	0.01 mmol/L
between run (10 days)				
mean (mmol/L)	139.8	4.00	98.4	1.00
C.V. (%)/SD (mmol/L)	0.2%	0.7%	1.1%	0.01 mmol/L
Reproducibility (expected)				
within run (n=20)	C.V. ≤ 1%	C.V. ≤ 2%	C.V. ≤ 2%	SD ≤ .03 mmol/L
between run (10 day)	C.V. ≤ 2%	C.V. ≤ 2.5%	C.V. ≤ .2.5%	SD ≤ .05 mmol/L
Accuracy (typical)	Performed according to a modified NCCLS protocol EP9-T			
	100-200 mmol/L	1-10 mmol/L	70-200 mmol/L	0.2-3.0 mmol/L
	n=86	n=86	n=86	n=80
slope	0.992	1.020	0.907	0.953
intercept	1.4	-0.03	10.4	0.04
correlation coeff.	0.99	0.99	0.99	0.99
URINE				
Reproducibility (urine std.)	25-1000 mmol/L	1-500 mmol/L	25-500 mmol/L	N/A
within run (n=20)				
mean (mmol/L)	166.8	64.7	129.8	——
C.V. (%)	0.34%	0.50%	1.96%	——
between run (10 day)				
mean (mmol/L)	168.9	64.4	131.6	——
C.V. (%)	3.8%	2.6%	2.4%	——
Reproducibility (expected)				
within run (n=20)	C.V. ≤ 5%	C.V. ≤ 5%	C.V. ≤ 5%	——
between run (10 days)	C.V. ≤ 5%	C.V. ≤ 5%	C.V. ≤ 5%	——
Accuracy (typical)	25-1000 mmol/L	1-500 mmol/L	25-500 mmol/L	——
	n=40	n=40	n=37	——
slope	0.98	0.99	0.99	——
intercept	8.2	1.1	3.7	——
correlation coeff.	1.00	1.00	0.99	——
Analysis Time:	55 sec. (Blood) / 90 sec. (Urine)			
Data Storage:	125 Patient results			
	QC - up to 20 results Normal, Low, and High			
Calibration:	Automatic or On-Demand			
Output:	32 character, 2- line alphanumeric display			
	40 column thermal printer			
	Serial port (RS-232C), EasySampler port			
Ambient Conditions:	15-32ºC (60-90ºF), <85% humidity			
Power:	100/115~VAC, 50-60 Hz, 0.8A or 220~VAC, 50-60 Hz 0.4A			
Size & Weight:	9.5"W x 16.5"H x 8.0"D, 13 lbs; 24 cm x 42 cm x 20 cm, 5.8 kg.			

Specifications (Na/K/Ca/pH)

CLIA Classification:	Moderate Complexity			
Sample:	Whole Blood, Serum, and Plasma			
Sample Size:	100 µL Whole Blood, Serum or Plasma			
Sample Temperature:	37.0° ± 0.1°C			
Method:	Direct (Undiluted) Measurement Ion Selective Electrode			
Detection Range:	Na+ : 20-200 mmol/L K+ : 0.2-40 mmol/L Ca++ : 0.1-6.0 mmol/L pH : 6.0-8.0 Units			
Resolution:	Na+: 0.1 mmol/L	K+: 0.01 mmol/L	Ca++: 0.01 mmol/L	pH: 0.005 units
Performance:	Na+	K+	Ca++	pH
BLOOD, SERUM, PLASMA	80-200 mmol/L	1-10 mmol/L	0.4-1.5 mmol/L	6.8-8.0 units
Reproducibility (typical)				
within run (n=20)	<1%	<2%	S.D.< .02 mmol/L	S.D.< 0.01 units
between run (10 day)	<2%	<2.5%	S.D.< .03 mmol/L	S.D.< 0.02 units
Calculated Analyte:	Normalized Ca++ (at pH 7.40) for samples within pH range of 7.20- 7.60 units.			
Analysis Time	60 seconds			
Data Storage:	Patient result storage of 125 results QC Results: up to 20 results Normal up to 20 results Low up to 20 results High			
Calibration:	Automatic or On-Demand			
Output:	32 character, 2 line alphanumeric display 40 column thermal printer Serial port (RS-232 optional)			
Ambient Conditions:	15-32ºC (60-90ºF), <85% humidity			
Power:	100/115 VAC, 50-60 Hz, 0.8A or 220 VAC, 50-60 Hz 0.4A Refer to the chassis serial number label for the voltage that has been factory set on your analyzer, and for proper fuse replacement.			
Size & Weight:	9.5"W x 16.5"H x 8.0"D, 13 lbs. 24 cm x 42 cm x 20 cm, 5.8 kg.			

9. Troubleshooting

Introduction

To enhance trouble-free operation of the EasyLyte, it is imperative to follow the maintenance schedule outlined under EasyLyte Maintenance.

When the message ***ERROR*** appears in the display, press the yes button and a message will be displayed indicating the nature of the error. Refer to the list of display messages for an explanation of the message. Then refer to the list of "typical error messages" to locate the problem area and proceed to the appropriate section for troubleshooting instructions.

When performing troubleshooting procedures, put the analyzer in ***STANDBY***.

After removing the electrodes, solutions pack, or after troubleshooting or performing maintenance, the operator must purge the fluid lines before calibrating the analyzer. To do this,

proceed to the **SOL'N PURGE?** routine in the ***OPER FUNCTS?*** section of the **SECOND MENU?**. Press yes. When purge is completed, press yes to **CALIBRATE NOW?**.

Warning: Human body fluid specimens may be contaminated with HIV or other pathogens.

Treat all specimens, collection devices, and analyzer components that may come in contact with specimens as biohazards.

For Help

If the appropriate troubleshooting procedures do not correct the observed error, contact your EasyLyte distributor.

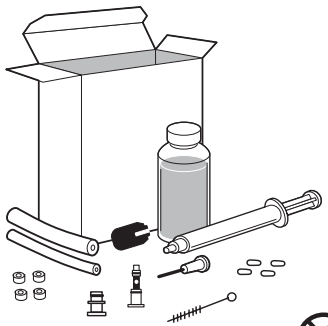

Troubleshooting Kit

Tools to help diagnose and correct problems:

10 cc syringe

18 gauge blunt needle

Tubing Segments

Red Caps

Electrode Connectors

Membrane Assembly

Red Test Dye Solution 50mL [0.1 mmol/L amaranth dye in electrolyte solution]

Reference Electrode Tool

Sodium Electrode Brush Tool

Fill Plug

Fluid Path System

All reagents and samples flow in one direction through the entire fluid path system as shown. The fluid path is a closed loop which ensures that the electrodes will always be kept wet, an important requirement of ISE's. All fluid path connections are simple push-on, air tight connections—no tools required.

Na/K; Na/K/Cl; Na/K/Li

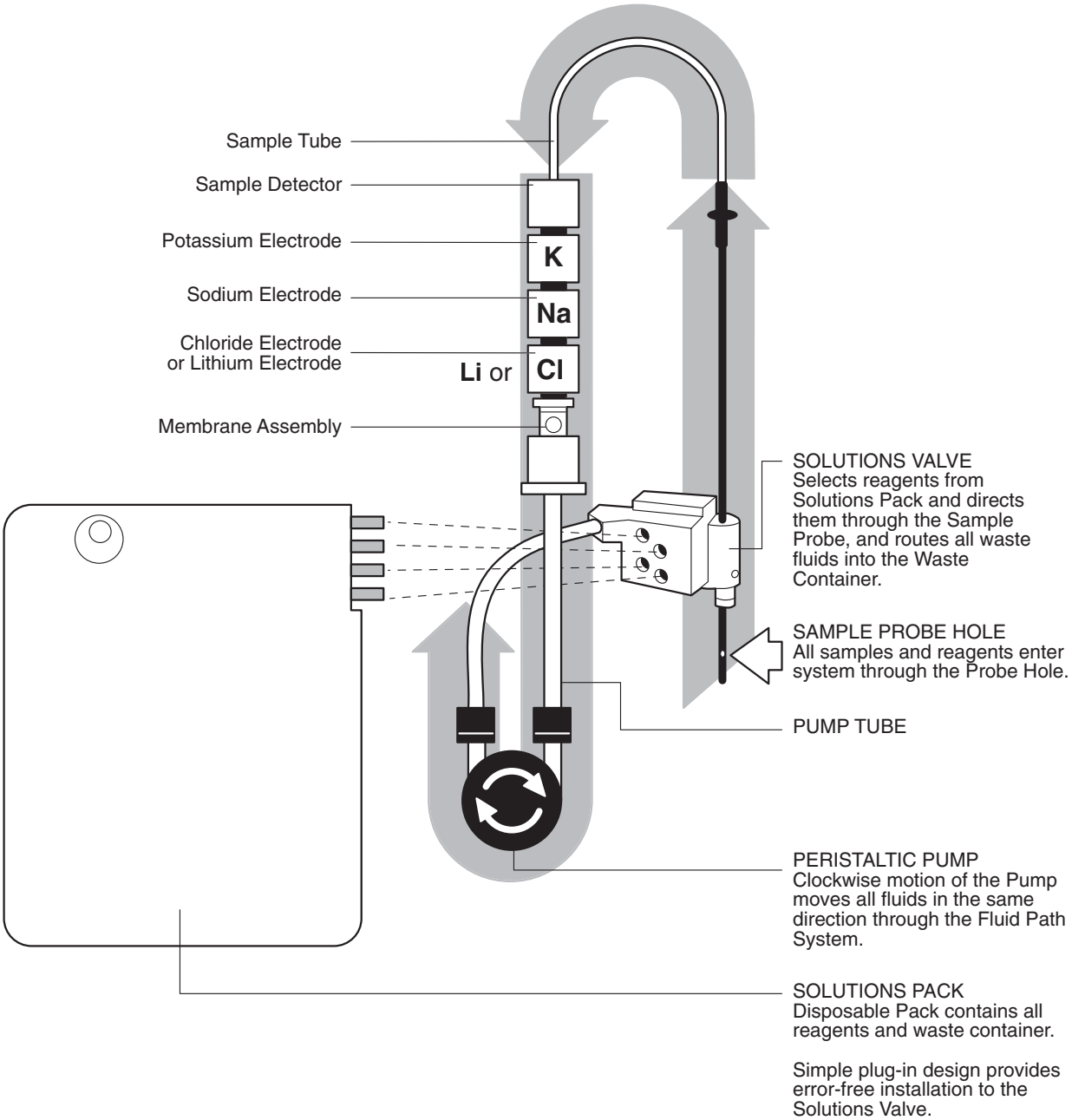

Na/K/Ca/pH

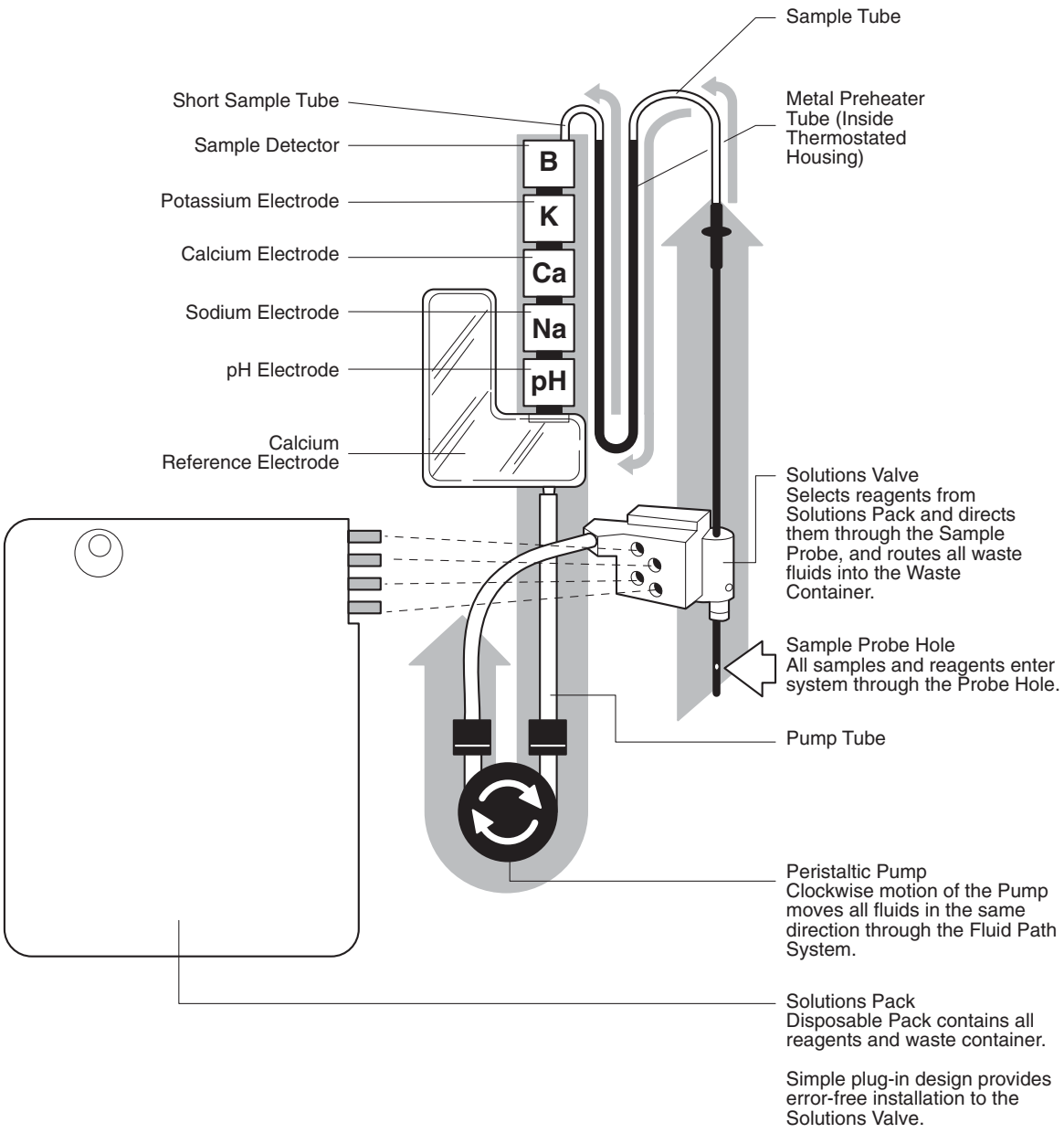
Sample Tube
Short Sample Tube
Sample Detector
Potassium Electrode
Calcium Electrode
Sodium Electrode
pH Electrode
Calcium
Reference Electrode
B
K
Ca
Na
pH
Metal Preheater Tube (Inside Thermostated Housing)
Solutions Valve
Selects reagents from Solutions Pack and directs them through the Sample Probe, and routes all waste fluids into the Waste Container.
Sample Probe Hole
All samples and reagents enter system through the Probe Hole.
Pump Tube
Peristaltic Pump
Clockwise motion of the Pump moves all fluids in the same direction through the Fluid Path System.
Solutions Pack
Disposable Pack contains all reagents and waste container.
Simple plug-in design provides error-free installation to the Solutions Valve.

If removal of EasyLyte components is required during troubleshooting, the component removal order is:

1 Solutions Pack

2 Pump and Sample Tubes

3 Electrode Housing (contains electrodes)

4 Sample Probe

5 Solutions Valve

For example, if the Sodium electrode requires replacement, it is necessary to remove the solutions pack, disconnect the pump and sample tubes, then remove the electrode housing. If the solutions valve requires cleaning, the operator must remove all of the items in the above list, before removing the solutions valve. To install components on the EasyLyte, follow the installation order outlined under Installation and Replacement.

Troubleshooting is covered in the order that problems are most likely to occur. Approach troubleshooting as a logical sequence of events. Isolate the problematic area to avoid unnecessary component replacement and/or excessive downtime.

PROBLEM AREA	**TYPICAL ERROR MESSAGES**
Section 1 Flow Problems	AIR IN STD A, AIR IN STD B, AIR IN SAMPLE, AIR IN WASH, FLUID PATH!, SAMPLE DETECTOR!, NOISE, DRIFT, AIR IN CLEANER, AIR IN RINSE
Section 2 Membrane Assembly	Electrode LOW and Electrode HIGH, NOISE, DRIFT,
Section 3 Electrodes	HIGH, LOW, DRIFT, NOISE
Section 4 Solutions Pack	AIR IN STD A, AIR IN STD B, AIR IN WASH, SOL'N PACK LOW, CHANGE PACK!
Section 5 Sample Detector	SAMPLE DETECTOR!
Section 6 Solutions Valve	PUMPCAL FAILURE! FLUID PATH!
Section 7 Printer	NO PRINTER ACTIVITY, PAPER JAM
Section 8 Electromechanical	MTS see manual!, MTP see manual!
	Na/K/Ca/pH Electrode Housing Temp Error

Flow Problems

Obstructions or air leaks in the fluid path will result in Error Messages such as **AIR IN STD A**, **AIR IN STD B**, **AIR IN SAMPLE**, **FLUID PATH**! and **SAMPLE DETECTOR!**. These messages indicate flow problems. Noise or drift messages, in some circumstances, may also indicate flow problems. A low or empty solutions pack may also cause **AIR IN STD A**, **AIR IN STD B** or **AIR IN WASH** messages. If this possibility exists, based on usage since the last solutions pack installation, refer to solutions pack troubleshooting before proceeding.

If an **AIR IN STD B** or **FLUID PATH!** message appears during a **SOL'N PURGE?** or calibration, after the electrode housing has been removed, disassembled, and reassembled, check to make sure that the electrodes are installed right side up and that all electrode connectors are properly installed. Performing this function twice may eliminate the error.

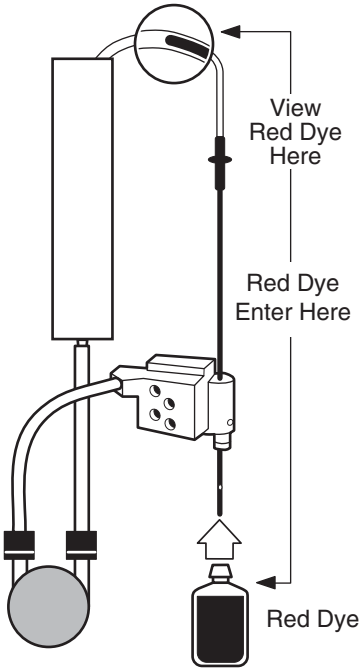

A The first step in determining if the analyzer's fluidics system is functioning properly is to use the **FLUID FLOW TEST?** routine in the ***DIAGNOSTICS?*** section of the **SECOND MENU?**. Answer yes to **FLUID FLOW TEST?** and run the red Test Dye (in the Troubleshooting Kit) as a sample. The operator can visually confirm whether fluid is flowing properly through the analyzer. If the red dye is aspirated and the sample detector is installed correctly, the EasyLyte will display **FLUID FLOW OK**. If this occurs, proceed to **SOL'N PURGE?** in the ***OPER FUNCTS?*** menu.

B If the **FLUID FLOW TEST?** fails, the message **FLOW TEST FAIL!** will appear on the display. Failure can result from air leaks or obstructions in the fluid path. Air leaks can be caused by a damaged or misconnected sample or pump tube. Check the sample tubing for cracking at either end. Replace if cracked. The pump tube should be removed and checked for crimping. Also, check for incorrect (upside down) installation of an electrode or missing electrode connectors.

C If no air leaks can be detected, it will be necessary to remove individual components to determine if they are obstructed. Since the probe hole and probe have the smallest diameter in the flow path, the sample probe has a higher probability of developing an obstruction. To remove the sample probe, unplug the solutions pack. Disconnect the sample tube from the sample probe, and the pump tube from the electrode housing. Remove the electrode housing. Remove the sample probe. Inspect the probe hole for any visible material that may be causing an obstruction. The sample probe should be flushed first with warm water, and then with air using the 10 cc syringe in the Troubleshooting Kit. Connect the syringe with a tubing segment (also in the Troubleshooting Kit) to the top of the sample probe. The water should come out the probe hole in an uninterrupted stream when pressure is applied with the syringe. Remove all material from the sample probe, as a partial obstruction may result in "AIR" messages. If the obstruction is located and removed, reinstall the sample probe. Perform a **FLUID FLOW TEST?**, **SOL'N PURGE?** and **SAMPLE DET TEST?**. If these tests are successful, perform a calibration in order to proceed with sample analysis.

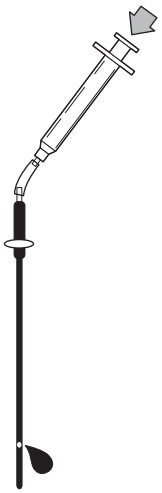

D If the obstruction is not located in the sample probe, next check the electrode assembly. Attach the syringe with the blunt needle (in the Troubleshooting Kit) to the free end of the sample tube and gently flush with water. The water should flow freely out the bottom of the electrode housing. If there is resistance, remove the sample detector and electrodes from the electrode housing and flush them individually. If the electrodes and sample detector are clear, the obstruction may be in the membrane assembly/disposable reference electrode, which should be replaced.

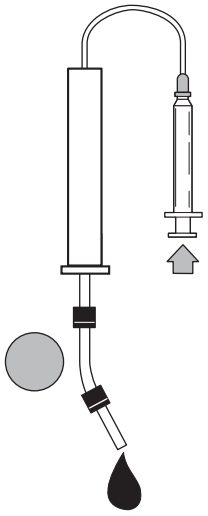

After all the components have been flushed, reassemble them. Make sure that the inside channel of the electrode housing (where electrodes slide into place) and the electrode pins are completely clean and dry. Verify that the solutions valve, sample probe, and electrode housing are seated properly. Perform a **FLUID FLOW TEST?**, **SOL'N PURGE?** and **SAMPLE DET TEST?**. If these tests are successful, perform a calibration before proceeding with sample analysis.

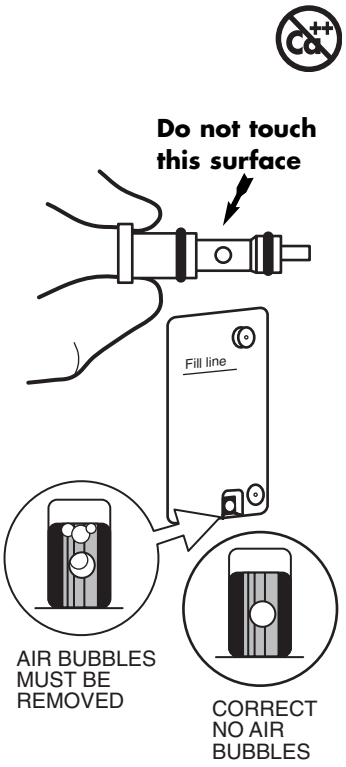

Membrane Assembly

The membrane assembly should be replaced after a maximum 6 months of use. Medica guarantees this item's performance for 3 months of use, but the frequency of replacement may depend on your sample volume or sample type (high volume of lipemic or high protein samples may necessitate more frequent changes of the membrane assembly). EasyLyte customers testing 100 or more patient samples per week should replace the membrane assembly after 3 months of use. When replacing the membrane assembly, install new internal filling solution at the same time.

A Na low with a simultaneous K high message after calibration, low or erratic readings on controls or samples, and some noise errors may indicate a problem with the membrane assembly.

A The membrane assembly should be checked for air bubbles on the "window". Tapping the electrode housing may help to dislodge any bubbles. If this is not successful, remove the electrode housing and invert it a couple of times, being sure to put your finger over the fill plug to prevent the internal filling solution from leaking out. At the same time, the electrode pins and jacks should be inspected to make sure they are dry and clean, particularly the reference electrode pin and jack if low or erratic readings occur.

B If bubbles are not present and the analyzer passes the **FLUID FLOW TEST?**, the membrane assembly should be changed. This is particularly true in the case of simultaneous low sodium and high potassium cal values.

Electrodes

Electrodes with low calibration values (below 50 for Na/K/Li, 40 for Cl, 45 for pH, and 20 for Ca), Drift, or Noise messages may indicate electrode failure. Electrodes with HIGH calibration values messages most often indicate a membrane assembly/disposable reference electrode failure.

For Na/K/Ca/pH analyzer, when the electrode housing is removed for electrode replacement, maintenance, troubleshooting, etc., wait for 30 minutes after reinstallation before calibrating the analyzer to insure proper electrode temperature. **K LOW**, **Na LOW**, **Ca LOW** or **pH LOW** (calibration value below 50 for Na/K, below 45 for pH, below 20 for Ca), **DRIFT**, or **NOISE** messages may indicate electrode failure. **K HIGH**, **Na HIGH**, **Ca HIGH** or **pH HIGH** most likely indicates a reference electrode failure.

A The calibration values (slopes) of the electrodes should fall within a range of 50 to 64 for Na/K/Li, 40 to 64 for Cl, 45 to 64 for pH, and 20 to 34 for Ca.

If they fall outside of this range, the out-of-range value(s) for "K", "Na", "Cl", "Li", "pH" or "Ca" will be flagged. If the analyzer does not calibrate the first time, it will automatically recalibrate.

At the end of the calibration cycle, the slope values will be displayed for each electrode. The EasyLyte will permit sample analysis only for the electrodes that are calibrated successfully.

If the pH electrode fails calibration, the normalized calcium value will not be reported.

B A **Na LOW**, **DRIFT**, or **NOISE** message indicates that an additional **WASH?** cycle may be necessary to condition the sodium electrode (not available for Na/K/Ca/pH). An on-demand **WASH?** can be performed by proceeding to ***OPER FUNCTS?*** in the **SECOND MENU?** and pressing Yes to **WASH?**. After the **WASH?**, calibrate the analyzer again. If the sodium calibration value remains low, refer to paragraph G. For Na/K/Ca/pH, proceed to **DAILY RINSE?** and press yes. After the rinse cycle, calibrate the analyzer again. If the sodium calibration value remains low, refer to paragraph G.

C A **K LOW**, **DRIFT**, or **NOISE** message may indicate that the potassium electrode needs replacing. Before doing so, perform a daily cleaning cycle, as described under **DAILY CLEANER?**. Next, perform a calibration. If the potassium calibration value remains low, replace the potassium electrode. Do not clean the potassium electrode with the sodium electrode brush tool.

D A low, drift, or noise message for chloride only, lithium only, calcium only or pH only may indicate that replacement of the specific electrode is necessary. Before doing so, try performing a daily cleaning/rinse cycle, as described under **DAILY CLEANER?/DAILY RINSE?**. Next, perform a calibration. If the calibration value remains low, replace the electrode.

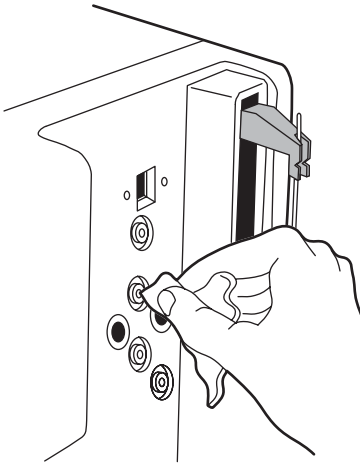

E If all electrodes have low or high calibration values, the problem is most likely with the membrane assembly or the reference electrode (on the Na/K/Ca/pH analyzer, the problem may be the disposable reference electrode). It is also possible that an incorrect solutions pack is being used. For example, if a 400 mL solutions pack is installed, but the operator selects **800 mL?** in ***PACK USAGE?***, the EasyLyte will not calibrate successfully.

F If drift or noise messages appear for all electrodes, there is most likely a Flow problem (refer to flow problems) or membrane assembly problem (refer to membrane assembly). Also, inspect the electrode pins and jacks, including the reference electrode pin and jack, to insure that they are dry and clean. After reassembly, the analyzer should be purged and calibrated.

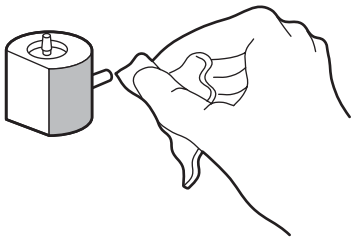

Do not perform the cleaning procedure described in paragraphs G as a preventative measure. Do not clean the electrodes, as described, if their Cal values are within the acceptable range. Do not clean the Potassium electrode with the sodium electrode brush tool under any circumstances.

★

G In some cases, the sodium electrode calibration value may drop prematurely due to protein build-up on the inside surface of the sodium electrode. Attempt protein removal by pushing the brush tool (found in the Troubleshooting Kit) through the sodium electrode. Gently pull the brush back out of the electrode. Reinstall the electrode, perform **SOL'N PURGE?**, **DAILY CLEANER?/DAILY RINSE?**, then **CALIBRATE NOW?**. If the sodium electrode Cal value remains low, install a new sodium electrode. Do not use the brush to clean the potassium, chloride, lithium, calcium or pH electrodes.

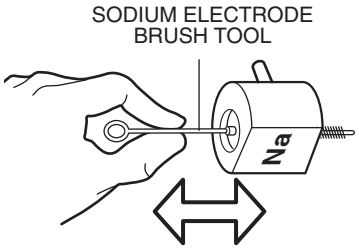



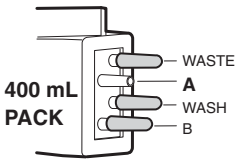

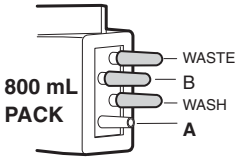

Note: the EasyLyte Na/K/Ca/pH solution packs do not contain wash solution.

Solutions Pack

AIR IN STD A, **AIR IN STD B**, **AIR IN WASH**, **SOL'N PACK LOW**, **CHANGE PACK!** messages may indicate that the solutions pack is empty or low.

The EasyLyte has an internal counter which keeps track of the solutions pack usage. The % counter should be set to zero (0) each time a new pack is installed (refer to ***PACK USAGE?***). The EasyLyte will indicate **SOL'N PACK LOW!** when 88% of the solutions pack has been utilized. When 99% of the solutions pack has been utilized, the analyzer will instruct the operator to **CHANGE PACK!**. At this time, no further analysis will be permitted until a new solutions pack is installed.

A If the solutions pack % usage is reset to 0% by accident, it may be difficult to predict pack life. In this case, "**AIR IN STD A**" errors will be the best indication that the pack is empty. To verify that a solutions pack is empty, remove the solutions pack from the analyzer and place the red caps (an extra set is included in the Troubleshooting Kit) on the waste port, the wash port and the Standard B port. Squeeze the solutions pack over a sink. If there is any Standard A left in the solutions pack, it should flow out. This test can be repeated for Standard B in the event an "**AIR IN STD B**" message appears.

▲ Note that the location of the Standard A port on the 400 mL solutions pack differs from the Standard A port location on the 800 mL pack. If the solutions pack setting in ***PACK USAGE?*** (400 mL or 800 mL) does not match the actual solutions pack installed, the EasyLyte will not calibrate correctly. In this situation, the EasyLyte electrode Cal values will be negative. Return to ***PACK USAGE?*** and correct the setting.

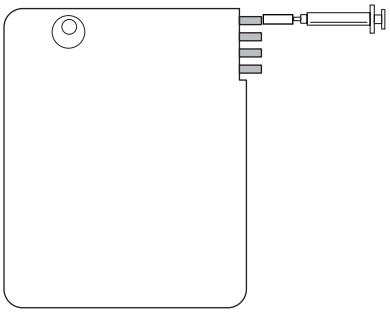

B Occasionally, a solutions pack may develop an internal air leak at one of the fitment seals (at Std A, Std B, or Wash). In this case, the EasyLyte will display "**AIR IN STD A**", "**AIR IN STD B**" or "**AIR IN WASH**", although the pack still contains that solution. To test the solutions pack for proper function, attach the syringe with tubing (from the Troubleshooting Kit) to the solutions pack fitment in question. With the solutions pack standing upright, pull the syringe barrel open for 3 or 4 mL. A steady stream of fluid should enter the syringe after an initial small amount of air. If no solution is aspirated, or the solution is mixed with air bubbles, the solutions pack is defective.

★

Do not push the solution from the syringe back into the solutions pack. Install a new solutions pack.

Remember that the 400 mL and 800 mL solutions packs contain the same reagents but in different orders. Be sure to test the correct solutions pack fit. Refer to the solutions pack illustrations.

C The EasyLyte solutions pack waste compartment has an internal check valve which permits waste samples and standard solutions to enter the waste bag of the solutions pack, after they are analyzed by the EasyLyte electrodes. The check valve prevents the waste from "backing up" out of the waste compartment.

Sometimes a new solutions pack has a waste check valve which closed during product shipment. When such a solutions pack is installed on the EasyLyte, the closed check valve will prevent any fluid movement through the EasyLyte system, creating the error "**AIR IN STD B**", or the EasyLyte will operate correctly, but fluid will leak at the solutions pack/solutions valve junction. If the operator suspects that the waste valve is obstructed, do the following:

Use the syringe with tubing from the Troubleshooting Kit (see paragraph B).

Fill the syringe with 3-5 mL of water.

Connect the syringe with tubing to the waste port (always the top port) of the solutions pack.

Inject the water into the waste compartment to open the check valve.

Remove the syringe and tubing and reinstall the solutions pack. Perform **SOL'N PURGE?**.



D The EasyLyte can still be utilized if the wash solution supply in the solutions pack is empty. If this occurs during the calibration cycle, the message **AIR IN WASH** will be followed by **USE EXT. WASH!** on the display. Wash Solution can be aspirated by pressing yes to **USE EXT. WASH!**. If none is available, as a temporary measure only, use red test dye to complete this procedure. The air in wash message may also appear during the **SOL'N PURGE?** routine, however, it does not interrupt the completion of the cycle. If the message appears in the on-demand **WASH?** routine, it will be followed by **USE EXT. WASH!**. After the **WASH?** cycle a calibration must be performed in order to proceed with sample analysis.

Sample Detector

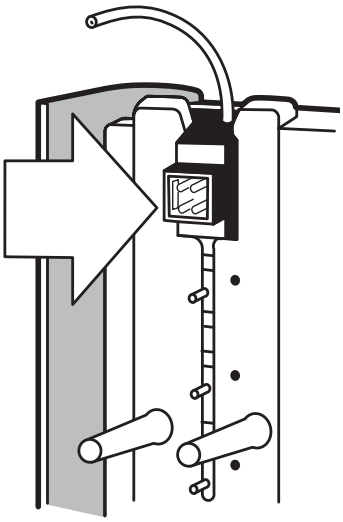

The sample detector detects the difference between liquid and air, which is important for proper sample positioning in the EasyLyte. To verify performance, proceed to ***DIAGNOSTICS?*** in the **SECOND MENU?** and perform a **SAMPLE DET TEST?**. Values for liquid and air will be displayed on the EasyLyte screen, and printed when the test is completed. The air value is typically less than 150, and the liquid value is typically greater than 200. If the difference between the two values is 50 or greater, the test is successful, as indicated by **SAMPLE DETECT OK**. The message **SAMPLE DETECTOR!** indicates failure. If the difference between the two values is less than 50, the sample detector requires cleaning. Remove the sample detector and clean the inside of the sample detector with the sodium electrode brush tool in the troubleshooting kit. Reinstall the sample detector, perform **SOL'N PURGE?**, **DAILY CLEANER?/DAILY RINSE?**, then **SAMPLE DET TEST?**.

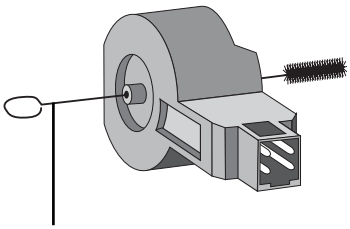

SODIUM ELECTRODE BRUSH TOOL

A value of 255 indicates a bad connection between the sample detector and the EasyLyte. In this case, check for possible bending of the pins on the back of the sample detector and be sure the electrode housing is fully engaged. After reinstalling the sample detector, look down on its top surface. When the sample detector is installed correctly, a red light will reflect from the hole on the left side of the sample detector. If the red light is not on, install a new sample detector.

Solutions Valve

If the EasyLyte is successfully purged, but the error messages **PUMPCAL FAILURE!** or **FLUID PATH!** occur during calibration, the solutions valve may require maintenance.

Proceed to **PUMPCAL TEST?** under ***DIAGNOSTICS?*** in the **SECOND MENU?**. Press yes. At the successful completion of the test, the pumpcal values will be printed. The expected values are between 500 and 800 (600-1000, Na/K/Ca/pH). If the pumpcal passes, **PUMPCAL OK** will appear. If it fails, **PUMPCAL FAILURE!** appears.

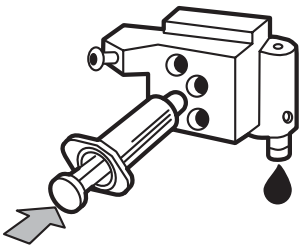

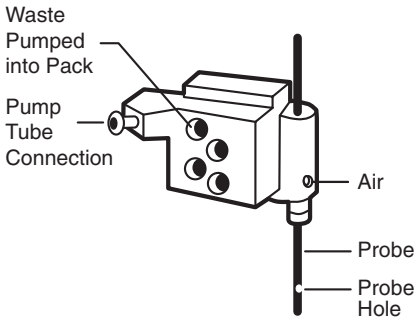

If Pump Cal failure continues, remove the solutions valve and flush each port with warm tap water, then with air. Use the syringe without the blunt needle. Be careful to hold the valve so that you will not be sprayed. After successfully flushing all valve chambers, reinstall the solutions valve. After reassembly, purge the fluid lines by pressing yes to **SOL'N PURGE?** under ***OPER FUNCTS?*** in the **SECOND MENU?**. Perform a **FLUID FLOW TEST?** (refer to flow problems), **SAMPLE DET TEST?** (refer to sample detector), and **PUMPCAL TEST?**. If all tests are successful, perform a calibration in order to proceed with sample analysis. If **PUMPCAL FAILURE!** or **FLUID PATH!** errors continue, install a new solutions valve.

Printer

If the EasyLyte printer fails to print, attempt the following procedures:

1 To verify that the printer is turned on, enter the **USER OPTIONS?** section of the software menu and answer no to the question **PRINTER OFF?**.

2 Check the printer mechanism for any paper obstructions in the printer head area. Remove any obstructions if possible, without damaging the printer assembly or paper tear bar.

3 If steps 1 and 2 are successful, but the printer remains inactive, remove the analyzer power cord for ten seconds, then reinstall the power cord. Press the paper advance button. The printer head should move across the paper, and the paper should advance forward.

If the printer continues to function abnormally, contact your EasyLyte distributor.

Electromechanical

For a blank display, no power to analyzer, "**MTS**" or "**MTP**" errors, etc., do the following:

1 Remove the power cord, wait 5 seconds, then reinstall the power cord.

2 The EasyLyte should display ****NA/K...****, then the sample probe should move down and back up.

3 **CALIBRATE NOW?** or **ALIGN PROBE/CUP?** (when operating with the Easysampler) should appear on the display.

4 Proceed as normal.

If blank display, no power, "**MTS**" or "**MTP**" errors continue, contact your EasyLyte distributor.

Performance Verification

Periodically, the laboratory may want to verify the analyzer's performance. Medica recommends the following procedures:

CALIBRATION—Automated

1 Press yes to **CALIBRATE NOW?**.

2 Standard B and Standard A from the solutions pack are aspirated and measured internally.

3 **ANALYZE BLOOD?** indicates a successful calibration. If an error is displayed, refer to instructions in the Troubleshooting section.

ACCURACY

1 Calibrate the analyzer.

2 Using the quality control kit, test each control level three times and record the data. Repeat this sequence for a total of 3 days.

3 Refer to the published ranges in the "Expected Value Chart".

4 The mean value (each day) for each parameter should fall within the published ranges.

PRECISION

1 Collect 5 patient samples.

2 Analyze each sample 10 times consecutively on the EasyLyte and record the data.

3 Calculate the mean, standard deviation and C.V. for each sample.

4 Compare the C.V. for sodium, potassium and chloride, and the S.D. for lithium, calcium and pH to the specifications.

CORRELATION

Use the EasyLyte and a reference analyzer (ISE, flame photometer or other) in the laboratory.

1 Collect 20 patient samples (serum is preferable for Na/K/Cl, and Na/K/Li, whole blood is preferable for Na/K/Ca/pH) and split in half.

2 Measure each sample on the EasyLyte and the reference analyzer.

3 Calculate the difference (Reference analyzer value - EasyLyte value) for each sample and record.

4 The laboratory director should determine acceptability.

AutoSampler

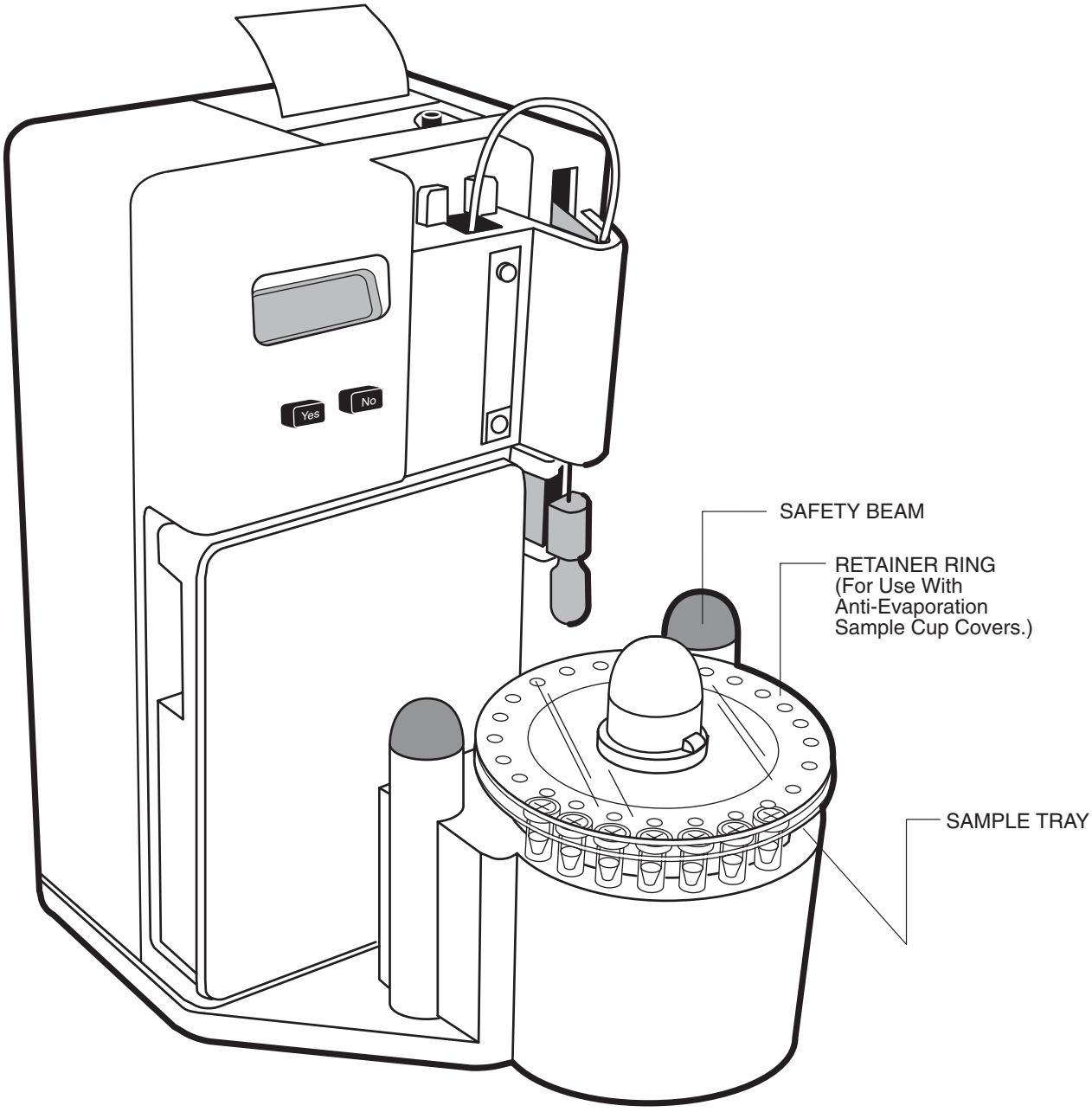

10. Automated Sampling

The EasySampler provides automated batch sampling of serum, plasma or diluted urine with the EasyLyte Na/K, Na/K/Cl and Na/K/Li electrolyte analyzers (urine analysis not applicable for lithium). Whole blood is not recommended because whole blood remains stable for only one hour after collection. However, STAT analysis of whole blood samples within one hour of collection is acceptable. EasySampler features a 24 position sample tray which includes 21 sample positions, one stat position, and two quality control positions. The sample tray holds either 500 µl or 2.0 mL sample cups.

The EasyLyte prints the results for each sample in the sample tray, indicating tray and position number, as well as date and time of analysis. Analysis of samples is repeated automatically if electrolyte values fall outside of preset ranges. The ranges are adjustable as described in the EasyLyte Operator's Manual. The operator can also select a repeat analysis of each sample under the **USER OPTIONS?** section of the menu. Sample analysis is stored in the EasyLyte memory for later retrieval.

Optical Safety Interlock

The EasySampler incorporates an optical safety interlock beam which detects any obstruction, such as the operator's hand, in the path between the sample probe and the sample cup. The sample probe and tray motion will cease and a beeping sound will continue until the obstruction is removed.

EasySampler Features

Twenty-One Sample Positions

Dedicated Normal and Abnormal Quality Control Positions

Dedicated STAT Position for Immediate Sample Measurement

Automatic Repeat Analysis of Samples with Out-of-Range Values

Optional Repeat Analysis of all Samples

Optional Repeat Analysis of all Samples Measured "Hi" or "Low"

Probe Safety Interlock

Sample and Tray Identification

Installation

Unpacking

Upon arrival, carefully remove the EasySampler and accessories from the shipping container and place on a level, solid work surface near its final position. Visually inspect the EasySampler and notify Medica if you find any shipping damage. For assistance in setting up your EasySampler please call Medica.

Do not discard the shipping container.

If it becomes necessary to return the EasySampler to Medica, use the original shipping container. This container was specially designed to protect the EasySampler and accessories during transportation. Medica will not be responsible for damage due to inadequate packaging.

Compatibility

The EasySampler is an accessory which can only be operated when connected to an EasyLyte analyzer. The EasyLyte analyzer provides supporting electronics and software necessary for power and control of the EasySampler.

EasyLyte analyzers with serial numbers greater than 6100 contain software with an EasySampler function to activate or deactivate the EasyLyte EasySampler. This function is located in the **USER OPTIONS?** section of the software menu.

Installed EasyLyte analyzers with serial numbers between 5000 and 6099 require a software Eprom change to operate with the EasyLyte EasySampler. Call Medica if you require assistance. EasyLyte analyzers with serial numbers below 5000 do not operate with the EasySampler.

The EasySampler automated sampling system contains an optical safety beam which detects any obstruction in the path between the sample probe and the sample cups in the EasySampler sample tray. An interruption of the beam that runs between the two black domes on the EasySampler causes the sample probe and the sample tray to cease movement, triggering a "beep" sound until the obstruction is removed.

When some EasySamplers are installed near windows, permitting sunlight to contact the two black domes of the EasySampler, the EasySampler intermittently "beeps", and ceases to function correctly. Install the EasySampler away from any sunlight to avoid this situation.

Connect EasySampler to the EasyLyte

Disconnect the power from the EasyLyte analyzer before beginning the EasyLyte EasySampler assembly procedure.

Carefully position the EasyLyte analyzer on top of the EasySampler platform so that the EasyLyte rubber feet fit into the four depressions on the EasySampler platform. Connect the EasySampler cable plug to the jack marked "EasySampler" on the rear cover of the EasyLyte.

DO NOT plug in the EasyLyte analyzer power cord at this time.

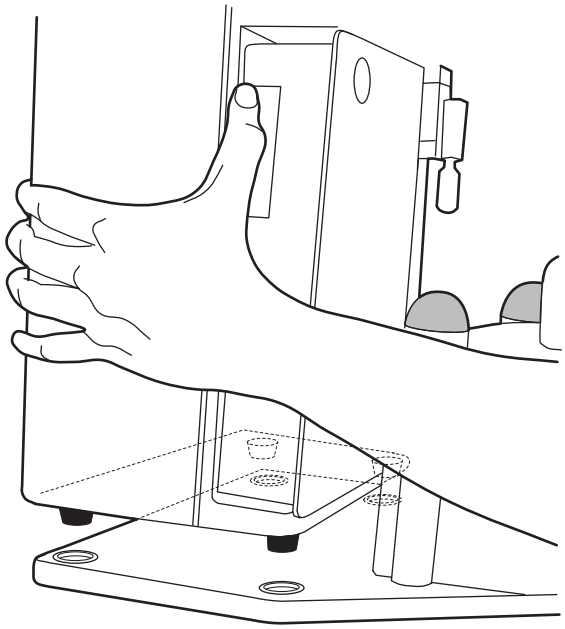

Installing the Sample Tray

Important: Install the sample tray on the EasySampler before plugging in the EasyLyte power cord. Place the sample tray on the black hub and turn it until the tray drops down on the slot in the hub.

Place retainer ring on sample tray so the notch on the Retainer ring fits over the tab on the sample tray.

Plug the AC power cord into the back of the EasyLyte. You will hear a beep. If ****Na/K ...AUTO**** is displayed, proceed directly to Step A. If *****Na/K*****, *****Na/K/Cl***** or *****Na/K/Li***** is displayed, proceed as follows to activate the Autosampler.

Proceed as follows:

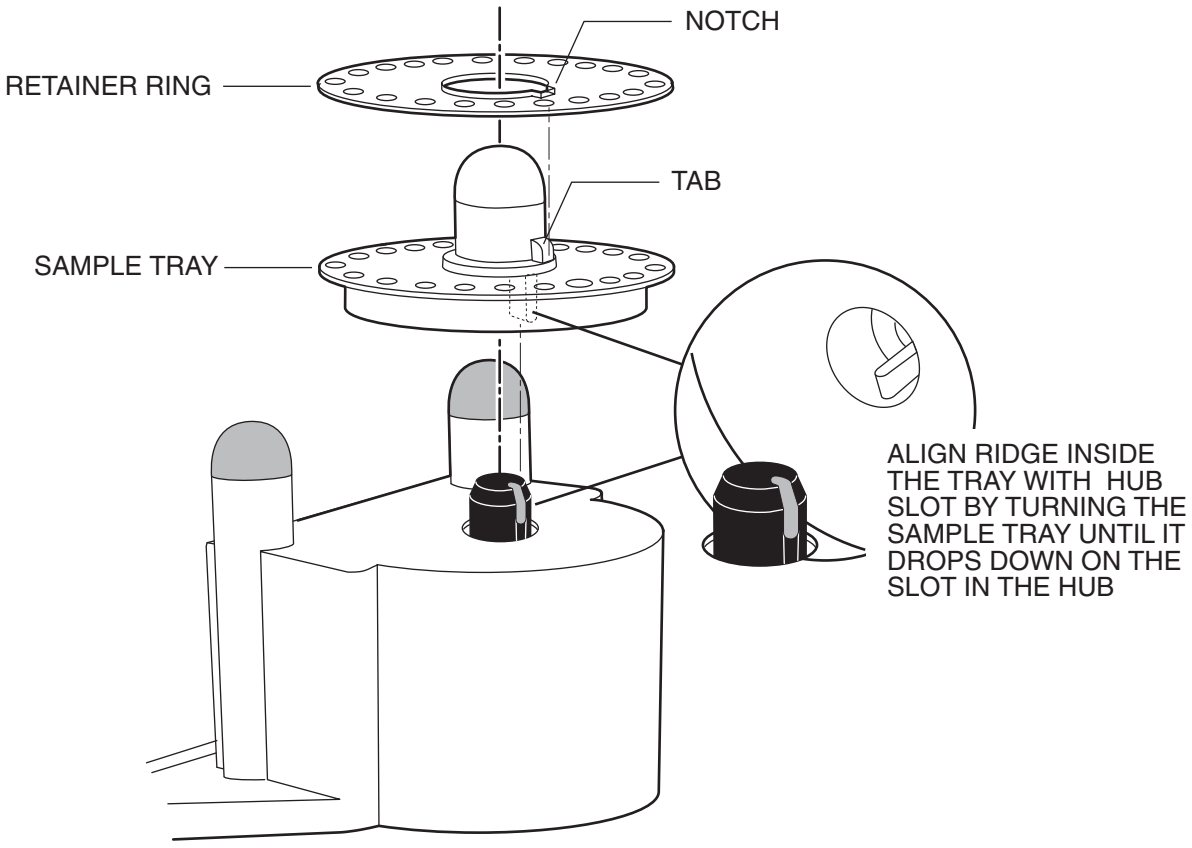

1 Press yes.

2 **CALIBRATE NOW?** is displayed. Press no until **SECOND MENU?** is displayed. Press yes.

3 Next, press no until ***OPER FUNCTS?*** is displayed. Press yes.

4 Next, press no until **USER OPTIONS?** is displayed. Press yes.

5 Next, press no until **EASYSAMPLER?** is displayed. Press yes.

6 **SAMPLER CONNECTED?** is displayed. Press yes.

7 **PLEASE CONFIRM!** is displayed. Verify that the EasySampler cable is connected to the back side of the EasyLyte and press yes.

8 **ONE MOMENT...** is displayed. The EasyLyte will print:

AUTOSAMPLER
Na/K... auto
MODE 00A

9 Wait until **ALIGN PROBE/CUP?** is displayed.

Align Tray

Do not move or rotate the sample tray by hand. Press yes. The sample tray will rotate and stop. **ALIGN PROBE/CUP?** is displayed. To verify the sample probe/cup alignment, press yes. The sample probe will descend and stop just above the daily cleaner tray position. **ALIGN CUP!/CUP ALIGNED?** is displayed. Visually inspect that the tip of the sample probe is centered over the daily cleaner hole. If the sample probe is centered, press yes and go to step E. If the sample probe is not centered, proceed with step B.

A Do not allow the sample probe to remain descended with the **ALIGN CUP!/CUP ALIGNED?** display for more than 60 seconds. If the probe remains in this position for over 60 seconds, the probe motor may overheat, requiring removal from power and a "cooling off" period before resuming normal function.

B Grasp the EasySampler and the EasyLyte (at the base) and carefully slide forward so that the front of EasySampler extends beyond the work surface.

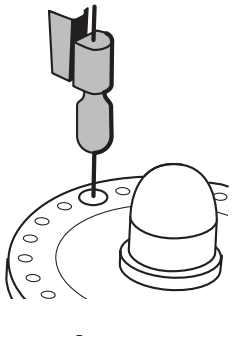

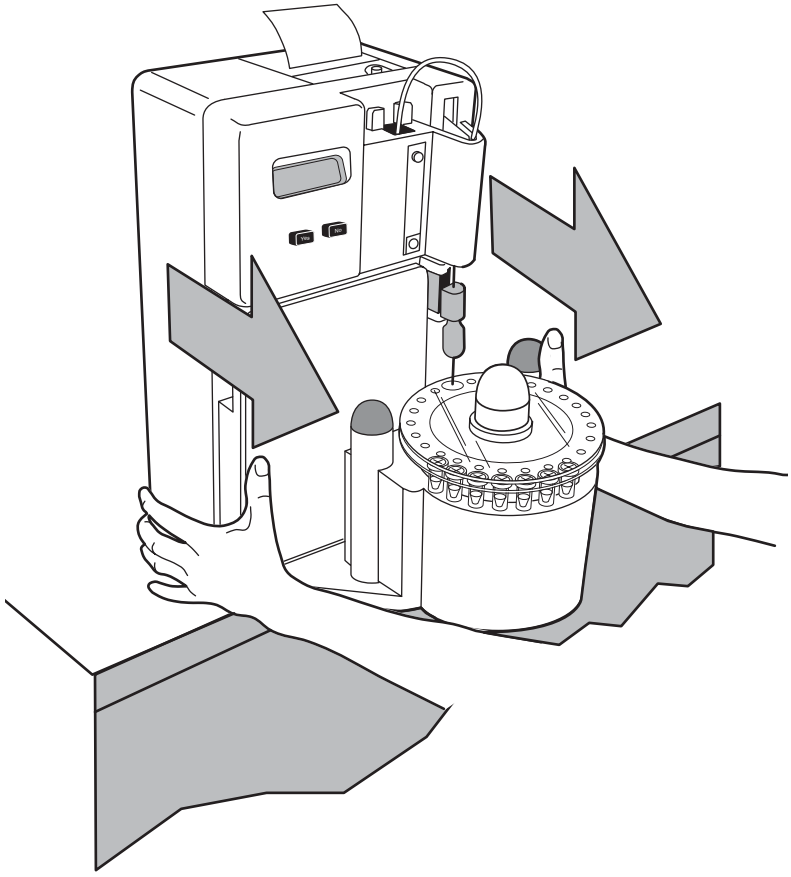

C Locate the large knob beneath the EasySampler base. Firmly grip and loosen the knob until the sample tray can move back and forth.

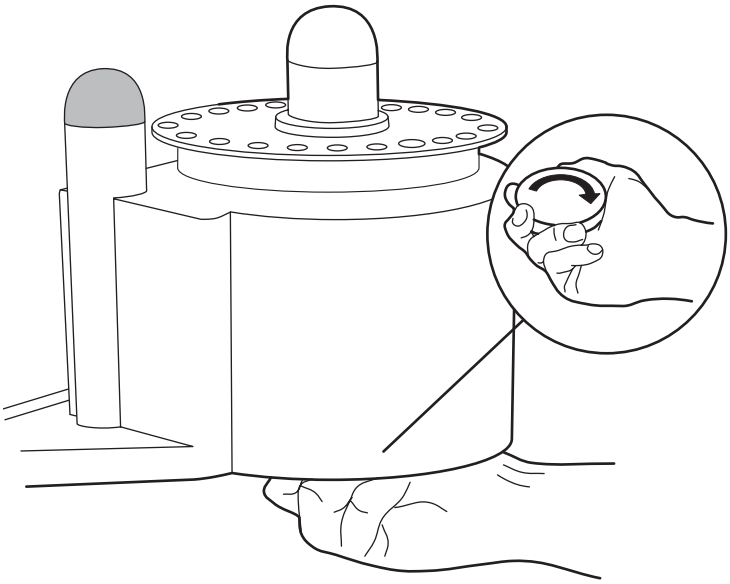

Grasp the sample tray hub with one hand and the loosened knob with your other hand. Using both hands, maneuver the tray until the daily cleaner position of the sample tray is centered directly beneath the sample probe tip. Hold the sample tray in position and tighten the knob beneath the EasySampler base.

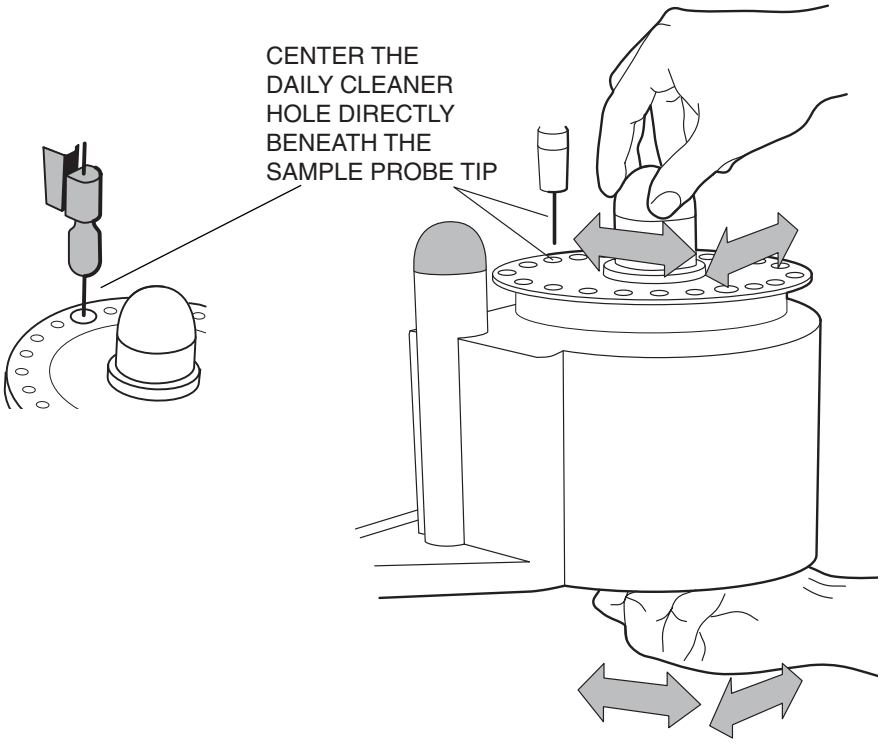

Press yes to **ALIGN CUP!/CUP ALIGNED?**, and the sample probe will go up.

D Grasp the EasySampler and EasyLyte (at the base) and push back to the original position on the work surface.

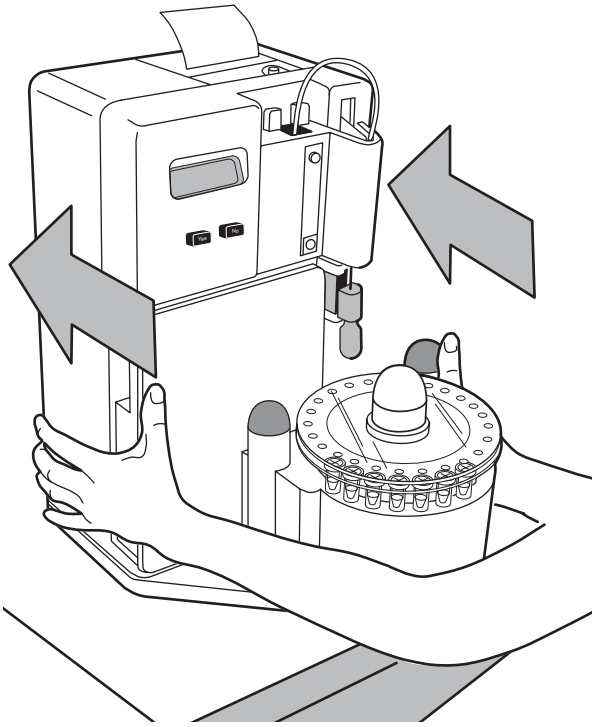

E Press yes to **ALIGNMENT OK?**. Press yes to **CALIBRATE NOW?** The EasySampler is now fully installed.

If the **EASYSAMPLER?** feature is activated, but the EasySampler is not connected to the EasyLyte, the EasyLyte will display ****Na/K...AUTO**** and beep repeatedly for 30 seconds, then display **ERROR**. At this time, the operator must connect the EasySampler, or return to the **AUTOSAMPLER?** question and answer no to eliminate this communication error. The EasyLyte will then instruct the operator to "disconnect" the EasySampler from the EasyLyte. For more information, see the **USER OPTIONS?** section of the EasyLyte Operators' Manual.

When in **USER OPTIONS?**, always answer yes to **AUTOSAMPLER?** to keep the EasySampler software active.

Whenever the **AUTOSAMPLER?** feature is switched on or off, the EasyLyte printer will print the change. The operator must recalibrate the EasyLyte after each time the EasySampler is switched on or off.

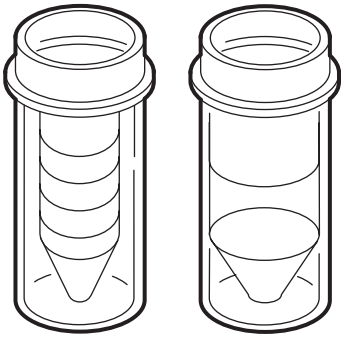

500 µL 2.0 mL

Loading the Sample Tray

Sample Cups

Two sizes of sample cups are used with the EasySampler. The 500 µL cup holds enough sample for two analyses of serum or plasma. The 2.0 mL cup is required for diluted urine samples.

▲ Before sample analysis can take place, the EasyLyte must be successfully calibrated. A successful calibration is indicated by **ANALYZE SAMPLES?** on the EasyLyte display.

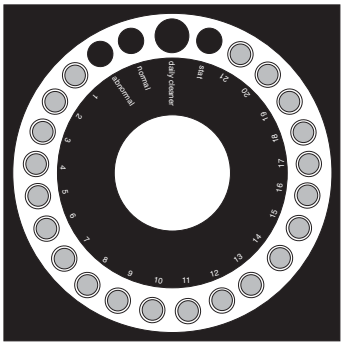

Sample Placement in the Tray

Place the sample cups in the sample tray beginning with position No. 1 to position 21. Do not leave any vacant sample positions between samples. If vacancies are left, **AIR IN SAMPLE** messages will be reported by the EasyLyte.

Do not place any patient samples in the QC positions. These positions are only for Normal and Abnormal QC samples and their values will be automatically stored as quality control data by the EasyLyte.

Each cup must have at least 400 µL of sample. However, filling the cup to the raised lip (with 500 µL) is suggested, as this allows enough sample volume for a repeated analysis should the first measured values fall outside of normal ranges. Insufficient sample for any analysis will result in **AIR IN SAMPLE** messages.

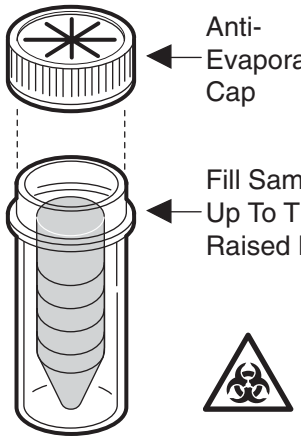

Anti-evaporation caps must be used on the sample cups to assure accurate sample analysis. After loading the tray with samples, place the sample cup retainer ring on top of the sample tray. If the retainer ring is not used, the sample cups will be lifted out of the sample tray by the sample probe as it moves up and down.

Do not mix urine and serum samples in the same sample tray.

Using Probe Wipers

Probe wiper lifetime is dependent upon the type of sample being aspirated. The recommended probe wiper life for various samples is:

Sample Type	Number of Samples Per Probe Wiper
Serum	100
Plasma	100
Urine	200

Analyzing Samples

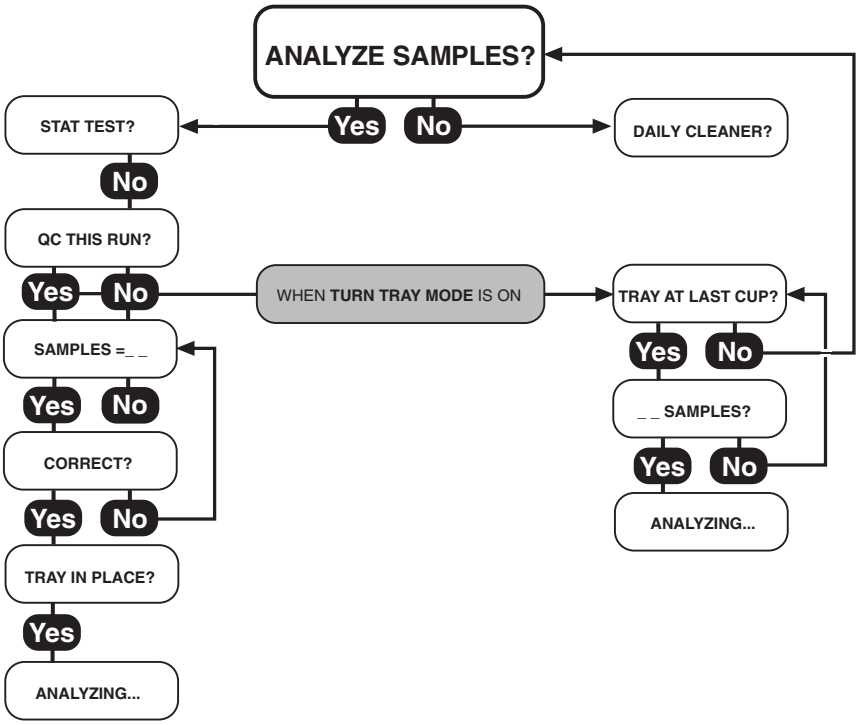

Beginning the Sample Run

Running samples is easy. Answer yes to **ANALYZE SAMPLES?**. EasyLyte will then ask questions about stat sampling and QC. If you have loaded quality control samples in the tray, answer yes to **QC THIS RUN?**. EasyLyte will then display **SAMPLES = 0 0** . Enter the number of samples by pressing the no button to change the underlined number. Press the yes button to advance the cursor to the next column. When the sample number is correct, answer yes to **CORRECT?**.

Alternatively, the operator can specify the number of samples by manually rotating the sample tray so that the last sample cup is under the sample probe. To activate this option, enter the **USER OPTIONS?** section of the EasyLyte menu and press yes to **TURN TRAY MODE?**. (See flow chart inside front cover.) Before starting the sample tray you will be instructed to manually turn the sample tray to the last sample cup.

When finished entering the number of samples or after turning the tray to the last sample cup, press yes to **CORRECT?**. To confirm that the tray is in place (when all samples are loaded), answer yes to **TRAY IN PLACE?**. The EasySampler tray will spin and sample analysis will begin. EasyLyte then automatically progresses through the entire sample run, storing and printing results by tray and position number as each sample is processed. Samples whose measured

values are outside the EasyLyte's preset "normal ranges" will be labeled low or hi. The date and time are printed at the completion of the tray. Samples are processed at the rate of one per minute. At the end of the run, the EasySampler is immediately ready for another tray of samples. The tray number automatically advances at the beginning of each run. The tray number is reset to 00 at 12:00 a.m. (midnight) each day. The sample run can be interrupted at any time by pressing the no button. To terminate the run, press no to **STAT TEST?** and no to **CONTINUE TRAY?** and yes to **PLEASE CONFIRM!**. Never stop a sample tray in progress by hand.

During a tray run the EasyLyte may print an error message. In this case, the EasySampler will repeat that sample analysis. If three successive error messages (not including **AIR IN SAMPLE**) occur, the EasyLyte and the EasySampler will stop and display the error message **TRAY FAILURE!**!. Follow normal troubleshooting procedures if this occurs. Refer to the EasyLyte Operator's Manual Troubleshooting section. **AIR IN SAMPLE** messages may be attributed to insufficient filling of sample cups.

Sample Analysis Replication

At the operator's request, the EasySampler can be programmed to automatically repeat the analysis of all samples by immediately aspirating a second sample after the first analysis is completed. Results of each sample replication will be stored and printed. This option is selected by pressing yes to **SAMPLE REPEAT?** in the **USER OPTIONS?** menu. To repeat all samples press yes to **REPEAT ALL ON?**. To repeat only "hi" or "low" samples press no, then press yes to **REPEAT HI/LO ON?**. To avoid **AIR IN SAMPLE** messages from the repeat analysis, you must fill the sample cup with 500 µL of sample.

Urine samples must be diluted one part urine to nine parts urine diluent before analysis. At **ANALYZE URINE?**, answer yes. The EasyLyte will display **DILUTED 1:10?**. After diluting and loading the samples, press yes. Tray analysis will begin. Do not mix serum or plasma specimens with urine specimens in the same tray.

When a sample tray is in progress, never:

1. Manually move or stop the sample tray.
2. Obstruct the safety beam between the black domes.

These situations can create abnormal tray movements, skipping of sample cups, and sample tray lock-up (MTC, MTS errors).

Stat Samples

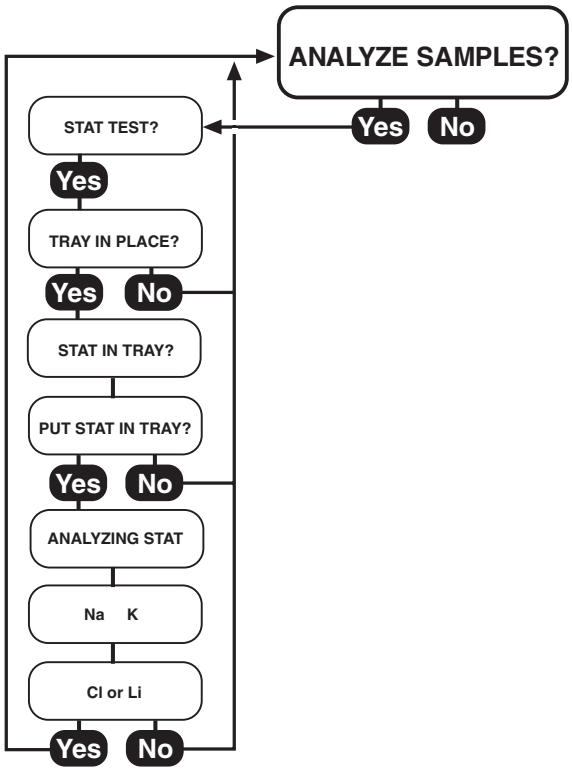

A stat sample may be run at any time on the EasySampler, using the special stat position on the sample tray. Press yes to stat **TEST?** The EasySampler will then rotate the sample tray so that the stat sample position is in front of the operator. Place the stat sample cup in the tray and press yes to **STAT IN TRAY?** Analysis will proceed automatically. A stat sample must be placed in a sample cup and loaded into the sample tray. Do not use vacutainers. Do not hold samples by hand beneath the sample probe. After stat processing, another stat sample may be run by pressing yes to **STAT TEST?**

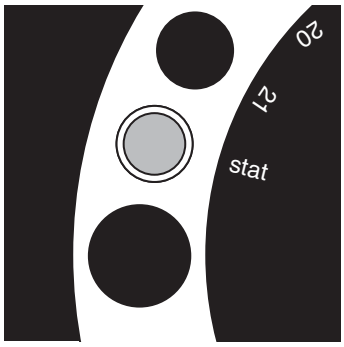

Observing Last Results

The EasyLyte will print previous sample and stat data by pressing yes to **SEE RESULTS?** in the second menu. All data is printed by tray number.

Stat Sample Tray Interrupt

The operator can run a stat sample at any time by interrupting a sample tray in progress. To interrupt a sample tray in progress, simply press the no button. The EasyLyte will display **ONE MOMENT...** and will finish processing the patient or QC sample in progress. The EasyLyte will then display **STAT TEST?** Press yes to run a stat sample. After the stat analysis, resume the tray in progress by pressing no to **STAT TEST?** and then yes to **CONTINUE TRAY?**

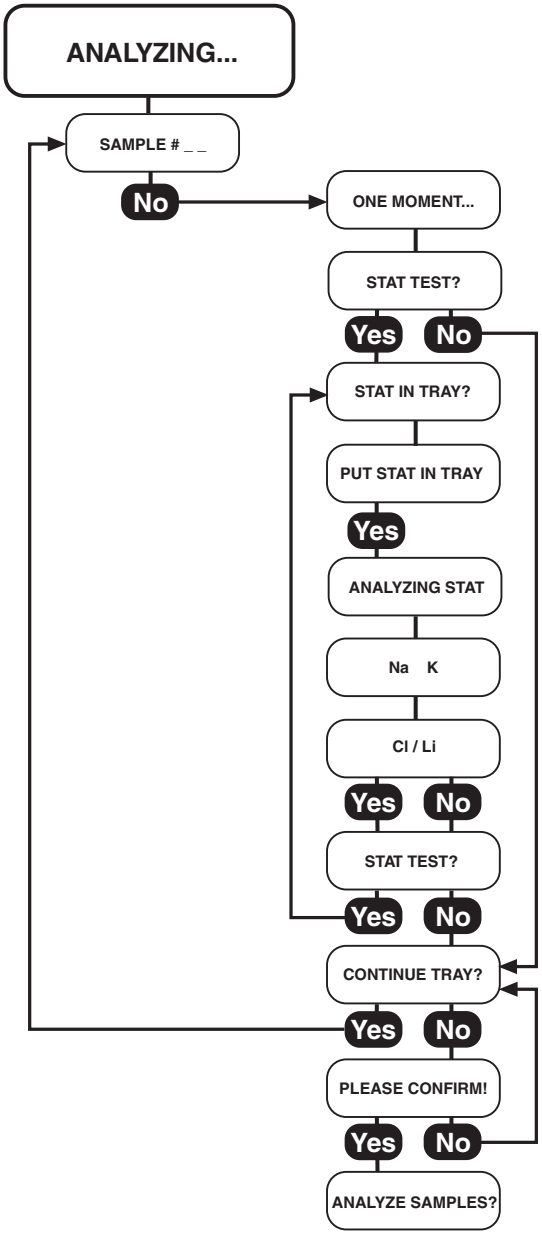

Quality Control

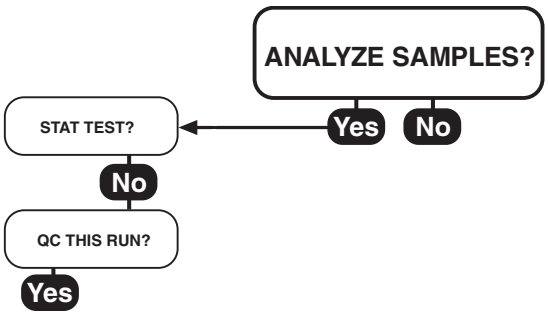



Quality control samples may be run at any time using the special QC cup positions on the sample tray. QC samples may also be run as part of a sample batch run. To perform QC along with the patient samples, press yes to **QC THIS RUN?**. QC values for the tray are printed and stored in EasyLyte memory. EasyLyte will automatically store up to 20 Normal and 20 Abnormal QC results. Calculation and print-out of complete statistics can be requested at any time between runs.

When running quality control in the urine mode, use undiluted control samples.

Daily Cleaner

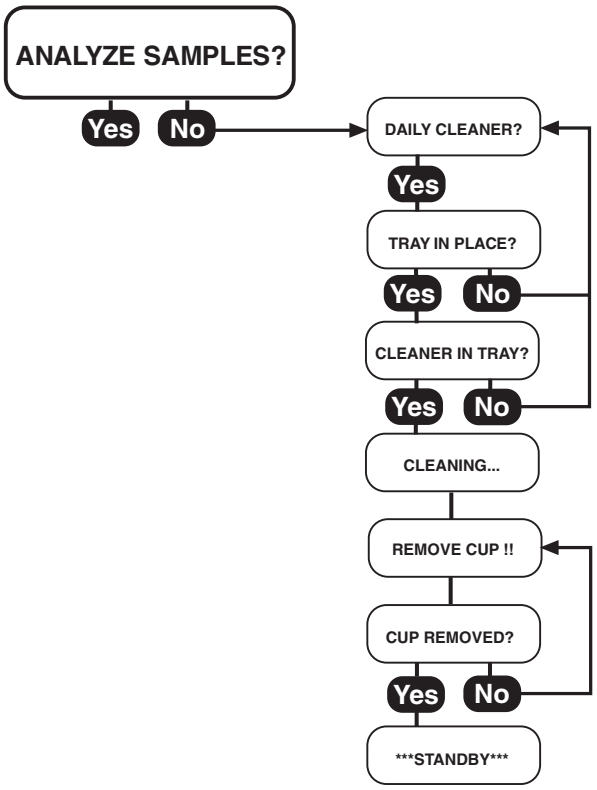



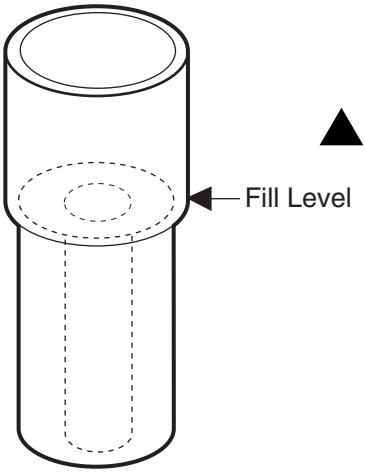

EasyLyte requires cleaning at the end of every work day. Pour Daily Cleaning Solution into the special daily cleaner cup to the fill level as shown. Press yes to **DAILY CLEANER?** and yes to **TRAY IN PLACE?**. The sample tray will rotate so that the Daily Cleaner position of the tray is in front of the operator. At this point, and not before, place the daily cleaner cup in the sample tray. Press yes to **CLEANER IN TRAY?**. The analyzer will complete the daily cleaning procedure automatically.

When cleaning is complete, the EasySampler will return the daily cleaner cup in front of the operator. EasySampler will beep intermittently until the cleaner cup is removed. After the cup is removed, press yes to **CUP REMOVED?**.

▲ Use the daily cleaner cup when performing **USE EXT WASH!** (Troubleshooting Section) or the **FLUID FLOW TEST?** (Diagnostics? Section). Fill the cup with Wash Solution or Test Dye Solution and place in the Daily Cleaner position on the sample tray when performing these procedures. Do not insert the daily cleaner cup into the sample tray until **CLEANER IN TRAY?** or **DYE IN TRAY?** is displayed. Rinse the daily cleaner cup with water after each test.

The EasySampler has a safety beam that runs between two black windows positioned above the EasyLyte tray surface. If this beam is interrupted by any object, the EasySampler will cease operation and "beep" until the obstruction is removed. Do not place any object in the path of the safety beam while the EasySampler is operating.

When the EasySampler is operating, messages such as **OBSTRUCTION!**, **TURN TRAY HOME!**, **MTS** or **MTC** indicate incorrect tray movement or safety beam obstruction. If the EasyLyte repeatedly displays any of the above messages, follow this procedure:

Remove the power cord from the back of the EasyLyte, then reinstall it. Check the EasySampler alignment. After aligning and tightening the tray, answer yes to **DAILY CLEANER?**, then yes to **TRAY IN PLACE?**. The sample tray should spin, and the daily cleaner position should stop in front of the operator. Next, answer no to **CLEANER IN TRAY?**. The sample tray should spin and stop with the daily cleaner position underneath the sample probe/solutions valve. If this happens, resume normal operation.



If you suspect that the EasySampler is not working properly you can "deactivate" the EasySampler and operate the EasyLyte analyzer by itself. Proceed to the **EASYSAMPLER?** function in **USER OPTIONS?** and press no. The EasyLyte will instruct you to disconnect the EasySampler from the EasyLyte. You can then calibrate the EasyLyte and operate without the EasySampler. For more information, refer to the ***OPER FUNCTS?*** section.

EasySampler Specifications:

Size:	Width: 12.2 inches (31.0 cm)
	Depth: 14.0 inches (35.6 cm)
	Height: 8.8 inches (22.4 cm)
Weight:	7.0 lbs (3.2 Kg)
Sample:	Serum, Plasma, Urine (diluted)
Throughput:	1 sample per minute
Sample Cup Capacity:	500 µL or 2.0 mL
Sample Tray Positions:	21 samples
	1 normal QC
	1 abnormal QC
	1 stat
Power Source:	EasyLyte Analyzer

Notes:

ABNORMAL STATS?	Allows operator to display or print statistics for abnormal control samples.
AIR IN CLEANER	Cleaning solution not detected correctly.
AIR IN CONTROL	Control sample not detected correctly.
AIR IN RINSE	Rinse solution not detected correctly.
AIR IN SAMPLE	Sample not detected correctly.
AIR IN STD A	Standard A not detected correctly.
AIR IN STD B	Standard B not detected correctly.
AIR IN WASH	Wash not detected correctly.
ALIGN PROBE/CUP?	Allows operator to check sample probe alignment.
ALL ABNORMAL?	Allows operator to delete all normal control results.
ALL HIGH?	Allows operator to delete all stored high control results.
ALL LOW?	Allows operator to delete all stored low control results.
ALL NORMAL?	Allows operator to delete all stored normal control results.
ALL RESULTS?	Allows operator to display all stored results.
ANALYZE BLOOD?	Sample analysis mode for Blood, Serum or Plasma. The message will only appear when the analyzer is calibrated.
ANALYZE URINE?	Urine analysis mode for Na/K/Cl results only.
ANALYZE SAMPLES?	Sample analysis mode for Serum or Plasma. The message will only appear when the analyzer is calibrated.
ANALYZING...	Analyzer is measuring sample.
ASPIRATING...	Sample is being drawn into probe.
AUTOCAL?	Allows operator to activate and to set time for initial daily calibration.
AUTOSAMPLER?	Allows operator to activate or deactivate the Sampler.
BLOOD Ca LIMITS?	Allows operator to set normal Ca range.
BLOOD Cl LIMITS?	Allows operator to set normal Cl range.
BLOOD K LIMITS?	Allows operator to set normal K range.
BLOOD Li LIMITS?	Allows operator to set normal Li range.

BLOOD Na LIMITS?	Allows operator to set normal Na range.
BLOOD pH LIMITS?	Allows operator to set normal pH range.
BOVINE?	Animal species selection under VET MODE?.
Ca HIGH…	Calcium result obtained is higher than the preset normal range (flashing display)
Ca LOW…	Calcium result obtained is lower than the preset normal range (flashing display)
CAL VALUES?	Allows operator to display last calibration values.
CALIBRATE NOW?	Allows operator to calibrate analyzer.
CALIBRATING...	Analyzer is calibrating.
CALIBR'TNG STD A	Electrodes being calibrated with respect to Standard A.
CALIBR'TNG STD B	Electrodes being calibrated with respect to Standard B.
CANINE?	Animal species selection under VET MODE?.
CAPILLARY SAMPLE?	Allows operator to analyze samples using Medica's Capillary Adapter Kit.
CHANGE DAY/TIME?	Allows operator to change date and time.
CHANGE HOUR?	Allows operator to change the hour during which autocalibration will occur.
CHANGE PACK!	Occurs at 99% pack usage. Pack must be replaced!
CLEANING...	Analyzer is performing daily cleaning.
Cl HIGH...	Chloride result obtained is higher than the preset normal range (flashing display).
Cl LOW...	Chloride result obtained is lower than the preset normal range (flashing display).
CONTINUE?	Analyzer requests confirmation to proceed.
CONTINUE TRAY?	Instructs EasySampler to resume running tray after Stat sample.
CORRECT?	Analyzer requests confirmation to proceed when setting patient samples or time.
CORRELATE BLOOD?	Allows operator to establish correlation equations for whole blood, serum and plasma analysis.
CORRELATE URINE?	Allows operator to establish correlation equations for urine analysis.

CORRELATED VALUES?	Appears under printed results if set correlation option on.
CORRELATION ON?	Allows operator to view established correlation equations.
C.V. VALUES?	Allows operator to display % C.V.'s of Quality Control results.
DAILY CLEANER?	Allows operator to perform daily cleaning.
DAILY RINSE?	Allows operator to perform daily rinsing.
DAILY SUMMARY?	Allows operator to print summary of daily results.
DATE/RANGES?	Allows operator to set date, time, and ranges.
DELETE CONTROLS?	Allows operator to delete stored control results from memory.
DELETE RESULTS?	Allows operator to delete patient sample results from memory.
DIAGNOSTICS?	Allows operator to check key analyzer functions.
DILUTED 1:10?	Request confirmation that urine sample has been diluted.
DRIFT Ca	Calcium electrode is drifting outside of electrode range.
DRIFT Cl	Chloride electrode is drifting outside of electrode range.
DRIFT K	Potassium electrode is drifting outside of electrode range.
DRIFT Li	Lithium electrode is drifting outside of electrode range.
DRIFT Na	Sodium electrode is drifting outside of electrode range.
DRIFT pH	pH electrode is drifting outside of electrode range.
DRIFT, RECAL...	Analyzer is automatically recalibrating because of electrode drift.
ELECTR'D VALUES?	Allows operator to display real time electrode millivolt readings.
ENTIRE SUMMARY?	Printed summary of all results in storage.

EQUINE?	Animal species selection under VET MODE?.
ERROR	Denotes an error has occurred. Press YES or NO to determine error.
FELINE?	Animal species selection under VET MODE?.
FLOW TEST FAIL!	Unsuccessful Fluid Flow Test.
FLUID FLOW OK	Successful Fluid Flow Test.
FLUID FLOW TEST?	Allows operator to run red Test Dye to check fluid flow.
FLUID PATH!	Analyzer is not detecting fluid and/or air segments when expected.
HIGH CONTROL?	Allows operator to select analysis of high control.
HIGH STATS?	Allows operator to display or print statistics for high control results.
HOUSING TEMP?	Allows operator to display thermostatted electrode housing temperature.
I.D. #- - - -	Allows operator to assign an identification number to patient result.
INSERT CAPILLARY/CAPILL INSERTED?	Prompts operator to insert a Capillary Tube into the Capillary Adapter during capillary sample analysis.
INSTALL ADAPTER/ADAPTER INSTL'D?	Prompts operator to install the Capillary Adapter onto the Sample Probe during capillary sample analysis.
K HIGH...	Potassium result obtained is higher than preset normal range (flashing display).
K LOW...	Potassium result obtained is lower than preset normal range (flashing display).
LAST CONTROL?	Allows operator to display last control result.
LAST RESULT?	Allows operator to display last analysis result.
Li HIGH..	Lithium result obtained is higher than the preset normal range (flashing display).
Li LOW...	Lithium result obtained is lower than the preset normal range (flashing display).

LOW CONTROL?	Allows operator to select analysis of low control.
LOW STATS?	Allows operator to display or print statistics for low control results.
MEAN VALUES?	Allows operator to display mean values of quality control results.
MTC SEE MANUAL!	Mechanical problem with carousel or obstruction of safety beam.
MTP	Mechanical problem with pump.
MTS	Mechanical problem with probe.
MUST USE CLEANR!	Cleaning Solution must be used before operating the analyzer.
MUST USE RINSE!	Rinse Solution must be used before operating the analyzer.
MV RANGE Cl	Measured Cl electrode voltage is outside EasyLyte measurement range.
MV RANGE K	Measured K electrode voltage is outside EasyLyte measurement range.
MV RANGE Li	Measured Li electrode voltage is outside EasyLyte measurement range.
MV RANGE Na	Measured Na electrode voltage is outside EasyLyte measurement range.
Na HIGH...	Sodium result obtained is higher than the preset normal range (flashing display).
Na LOW...	Sodium result obtained is lower than the preset normal range (flashing display).
Na/K or ***Na/K/Cl*** or ***Na/K/Li*** or ***Na/K/Ca/pH***	Appears when power is connected or restored after interruption.
NEW PACK INSTLD?	Asks operator to confirm that a new pack has just been installed.
NEXT SAMPLE?	Operator can proceed to next analysis.
NOISE	Erratic signal coming from electrodes.
NOISE, RECAL..	Analyzer automatically recalibrates after detecting noise.
NORMAL CONTROL?	Allows operator to select analysis of normal control.

NORMAL RANGES?	Allows operator to set normal ranges.
NORMAL STATS?	Allows operator to display or print statistics for normal control results.
NOT ENOUGH DATA!	In order to calculate statistics, the analyzer requires at least 5 stored control results for each control level.
OBSTRUCTION	Obstruction of safety beam.
OPER FUNCTS?	Allows operator to select "On Demand" wash, purge or calibration functions.
OTHER?	Animal species selection under VET MODE? designated by operator.
PACK USAGE?	Allows operator to display % pack expended.
PATIENT ID#?	Allows operator to assign identification number to patient's result.
% OF PACK USED	Percentage of solutions pack that has been expended.
pH HIGH	pH result obtained is higher than the preset normal range (flashing display).
pH LOW	pH result obtained is lower than the preset normal range (flashing display).
PORCINE?	Animal species selection under VET MODE?.
PRINTER OFF?	Allows operator to turn printer function on or off.
PRINTING...	Printer is printing requested data.
PRINT RESULTS?	Allows operator to print all results stored in memory.
PRINT STAT'TICS?	Allows operator to print control summaries.
PRINT SUMMARY?	Prints daily summary of results.
PRINT WKLY SUM?	Prints summary of last five days' results.
PROBE IN BLOOD?	Requests operator to confirm that probe is in blood.
PROBE IN CLEANR?	Requests operator to confirm that probe is in Daily Cleaning Solution.
PROBE IN CONTROL?	Requests operator to confirm that probe is in control sample.
PROBE IN DYE?	Requests operator to confirm that probe is in Test Dye Solution.

PROBE IN RINSE?	Requests operator to confirm that probe is in daily rinse solution.
PROBE IN URINE?	Requests operator to confirm that probe is in urine.
PROBE IN WASH?	Requests operator to confirm that probe is in Wash Solution.
PROBE WIPING ON?	Allows operator time to manually wipe the probe after sample is removed.
PUMP CAL...	Pump is being calibrated.
PUMPCAL FAILURE!	Failure of Pumpcal Test.
PUMPCAL OK	Successful completion of Pumpcal Test.
PUMPCAL TEST?	Allows operator to test pump calibration.
PURGING STD A	Standard A fluid line is being purged.
PURGING STD B	Standard B fluid line is being purged.
PURGING WASH	Wash Solution fluid line is being purged.
PUT STAT IN TRAY	Instructs operator to place sample in tray.
QC THIS TRAY?	Allows operator to include QC samples in EasySampler run.
QUAL CONTROL?	Allows operator to choose quality control functions.
REMOVE ADAPTER	Instructs operator to remove the Capillary Adapter from the Sample Probe during capillary sample analysis.
REMOVE CAPILLARY	Instructs operator to remove the Capillary Tube from the Capillary Adapter during capillary sample analysis.
REMOVE CONTROL	Requests operator to remove control sample from probe.
REMOVE CUP!!	Prompts user to remove daily cleaner cup after usage.
REMOVE SAMPLE	Requests operator to remove sample from probe.
REPEAT ALL ON?	Allows operator to repeat analysis of all samples in tray.
REPEAT HI/LO ON?	Allows operator to repeat analysis of all samples measured as high or low.
RESET TO 0%?	Sets pack usage percentage counter to 0%.

RINSING	Daily rinse cycle is in progress.
RUN CONTROL?	Quality control analysis mode.
SAMPLE CAL...	Analyzer is calibrating the Sample Detector.
SAMPLE DETECT OK	Successful completion of Sample Detector Test.
SAMPLE DETECTOR!	Sample Detector readings out of range.
SAMPLE DET. TEST?	Allows operator to test sample detector.
SAMPLE REPEAT?	Instructs EasyLyte to repeat analysis of samples in tray.
SAMPLES =	Allows user to enter number of samples to be run in batch.
S.D. VALUES?	Allows operator to display Standard Deviation values of Quality Control results.
SECOND MENU?	Secondary menu selection.
SEE MANUAL!	See Operator's Manual for assistance or explanation.
SEE RESULTS?	Allows operator to display or print stored results.
SEE STATISTICS?	Allows operator to display Mean, S.D., C.V. values of Quality Control results.
SELECT LANGUAGE?	Allows operator to select one of five languages to operate EasyLyte.
SET CORRELATION?	Allows operator to correlate the analytes to a reference analyzer or method.
SOL'N PACK LOW!	Appears when solutions pack is 88% expended. Continue operating analyzer.
SOL'N PURGE?	Allows operator to purge air from fluid lines.
STANDBY	Appears when Analyzer is in Standby mode.
STANDBY IN 1 MIN	Analyzer will go into standby in 1 minute. (flashing message)
STANDBY MODE?	Allows operator to put analyzer in standby mode to conserve fluids.
STAT IN TRAY?	Verifies that Stat sample cup has been inserted in tray.
STAT TEST?	Allows operator to initiate run of a Stat sample.

STATISTICS?	Allows operator to display statistics for all control results.
STORE RESULT?	Allows operator to store result in memory.
SYRINGE SAMPLE?	Allows operator to adjust probe extension during analysis to accommodate a syringe.
TESTING...	Analyzer in process of completing a Fluid Flow Test.
TRAY AT LAST CUP?	Prompts operator to turn tray to last cup to enter number of samples.
TRAY FAILURE!!	Three successive errors during sample analysis.
TRAY HOME...	Indicates tray turning to confirm position.
TRAY IN PLACE?	Verifies that sample tray is in place.
TRAY TERMINATED	Message printed when user chooses to discontinue testing.
TRY PURGE AGAIN?	Allows operator to perform additional purge after initial failure to purge.
TURN TRAY HOME!!	Instructs operator to turn tray to home position.
TURN TRAY MODE?	Allows operator to select the turn tray mode of entering number of samples.
TRY PURGE AGAIN?	Allows operator to perform additional purge after initial failure to purge.
URINE Cl LIMITS?	Allows operator to set normal Cl range for urine.
URINE K LIMITS?	Allows operator to set normal K range for urine.
URINE Na LIMITS?	Allows operator to set normal Na range for urine.
USE EXT. WASH!	Wash solution in pack is empty. Operator must use external wash.
USER OPTIONS?	Allows operator to access the following functions: Probe wiping, Patient ID#, Syringe Sample, Set Correlation, Vet Mode, Select Language, AutoSampler, and Printer Off.
VET MODE?	Allows operator to measure animal specimens.
WARMING UP/ PLEASE WAIT...	EasyLyte calcium is not at optimum operating temperature at 37°C.

WASH?	Allows operator to perform an on-demand Wash cycle.
WASHING...	Analyzer is washing electrodes.
WASH, RECAL ...	If calibration fails, analyzer does a Wash and recalibration automatically.
WEEKLY SUMMARY?	Allows operator to print last five days' stored results.
WIPE PROBE	Allows operator time to wipe off sample from exterior of probe.
"!!"	Na/K, Na/K/Cl or Na/K/Ca/pH result(s) out of analyzer measurement range.
*****	Electrode not calibrated, no results reported, or Lithium result is less than 0.2 mmol/L.
400 mL PACK?	Select for correct solutions pack size.
800 mL PACK?	Select for correct solutions pack size.

Appendix A

Medica EasyLyte Consumables

ITEM	SHELF LIFE	WARRANTY
Ca^{++} Electrode	1 year	6 months
Cl^{-} Electrode	1 year	6 months
Disposable Reference Electrode	1 year	3 months
Na^{+} Electrode	1 year	12 months
K^{+} Electrode	1 year	6 months
Li^{+} Electrode	1 year	6 months
pH Electrode	1 year	6 months
Reference Electrode	1 year	12 months
Membrane Assembly	1 year	3 months
Solutions Valve	18 months	12 months
Sample Probe	infinite	12 months
Probe Wipers	infinite	100 serum samples or 50 whole blood samples
Sample Detector	18 months	12 months
Tubing Kit	infinite	3 months
Troubleshooting Kit	18 months	12 months
Quarterly Operating Kit	18 months	3 months
Solutions Pack	18 months	use before Install By Date
Daily Cleaning Solution	18 months	use before Expiration Date
Calcium Rinse Solution	1 year	use before Expiration Date
Wash Solution	18 months	use before Expiration Date
Urine Diluent	18 months	use before Expiration Date
Standard Solution, Urine	18 months	use before Expiration Date
"Red Dye" Test Solution	18 months	use before Expiration Date
Internal Filling Solution	18 months	3 months
Annual Operating Kit	1 year	see individual components
Quality Control (Normal)*	18 months	use before Expiration Date
Quality Control (Low)*	18 months	use before Expiration Date
Quality Control (High)*	18 months	use before Expiration Date

Shelf Life: The maximum storage time after manufacture before use is initiated.

Warranty: The guaranteed operating lifetime after installation.

Expiration Date: The last month during which product performance is assured. Expiration dates are printed on the individual product labels.

Install By Date: Use must commence by that date to guarantee the warranty period.

*Quality Control Material is guaranteed for 8 weeks after the date it is first opened, when handled and stored as specified on the product label and the insert sheet.

Appendix B

Warranty

Medica warrants the EasyLyte Analyzer will be free of defects in material and workmanship for a period of twelve months from the date of purchase, excepting only those parts or materials which are consumed or expended in normal use. In the case of consumables or expendables, the warranty time period shall be the usage time prescribed in the operator's manual providing such consumable or expendable is used prior to any "install by" or "expiration" date. The warranty is only applicable when the EasyLyte is used under normal operating conditions and maintained in accordance with the instructions in the operator's manual and when not having been subjected to accident, alteration, or misuse. In the event of failure within the warranty period, Medica will repair or replace any Analyzer returned to us and not conforming to the above warranty or, at its option, refund the purchase price. Medica reserves the right to ask for proof of date of purchase, such as the original invoice.

THE WARRANTY DESCRIBED ABOVE IS EXCLUSIVE AND IN LIEU OF ALL OTHER WARRANTIES WHETHER STATUTORY, EXPRESS, OR IMPLIED (INCLUDING, BUT NOT LIMITED TO, ANY IMPLIED WARRANTY OF MERCHANTABILITY OR FITNESS FOR A PARTICULAR PURPOSE AND ALL WARRANTIES ARISING FROM THE COURSE OF DEALING OR USAGE OF TRADE). THE BUYER'S SOLE AND EXCLUSIVE REMEDY IS FOR REPAIR OR REPLACEMENT OF THE DEFECTIVE ANALYZER OR PART THEREOF, OR REFUND OF THE PURCHASE PRICE OF SUCH PRODUCT; BUT IN NO EVENT SHALL MEDICA BE LIABLE TO THE BUYER OR ANY PERSON FOR ANY SPECIAL, INDIRECT, INCIDENTAL, OR CONSEQUENTIAL DAMAGES OR OTHERWISE WITH RESPECT TO, OR ARISING OUT OF, THE PRODUCT FURNISHED THEREUNDER.

Representations and warranties made by any person, including Dealers, representatives and employees, which are inconsistent or in conflict with, or in addition to, the terms of this warranty shall not be binding upon Medica unless in writing and signed by one of its officers.

If you require warranty service in the USA or Canada, please call our Technical Service Department at 1-800-777-5983. Outside the United States and Canada, please contact your local distributor.

Appendix C

Understanding the Symbols

Symbol	Definition
IVD	*In vitro* diagnostic device
	Consult operating instructions
	Attention, see instructions for use
	Temperature limitation
	Do not freeze
LOT	Batch code
	Use by
REF	Catalog Number
	Manufacturer
EC REP	Authorized Representative
CE	CE Mark
	Biohazard
SN	Serial Number
	UL

Symbol	Definition
	Fuse
~	Alternating current
	Not available for Na/K/Ca/pH analyzer
	Not available for Na/K/Li analyzer
	Install by

001494-001R6

For Service or Technical Assistance:

800 777 5983 (in the continental USA)

781 275 4892 (International)

781 275 2731 (Fax)

www.medicacorp.com
medica@medicacorp.com

MEDICA
5 Oak Park Drive
Bedford MA 01730-1413 USA