Cytomics FC 500
With CXP Software

Instructions For Use

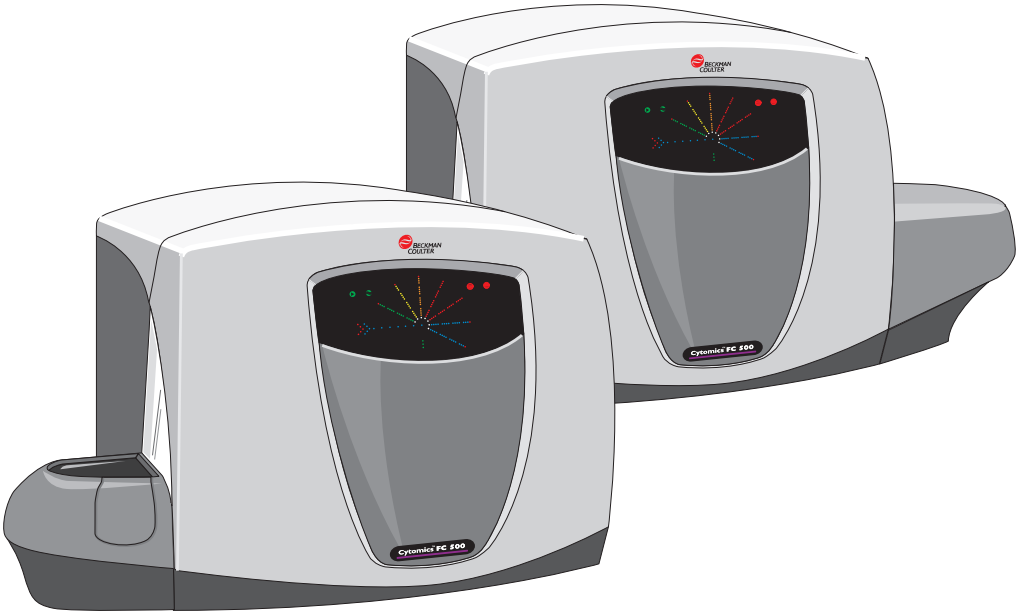

IVD

PN 624923BF (July 2016)

Beckman Coulter, Inc.
250 S. Kraemer Blvd.
Brea, CA 92821 U.S.A.

BECKMAN COULTER

WARNINGS AND PRECAUTIONS

READ ALL PRODUCT MANUALS AND CONSULT WITH BECKMAN COULTER-TRAINED PERSONNEL BEFORE ATTEMPTING TO OPERATE INSTRUMENT. DO NOT ATTEMPT TO PERFORM ANY PROCEDURE BEFORE CAREFULLY READING ALL INSTRUCTIONS. ALWAYS FOLLOW PRODUCT LABELING AND MANUFACTURER'S RECOMMENDATIONS. IF IN DOUBT AS TO HOW TO PROCEED IN ANY SITUATION, CONTACT YOUR BECKMAN COULTER REPRESENTATIVE.

HAZARDS AND OPERATIONAL PRECAUTIONS AND LIMITATIONS

WARNINGS, CAUTIONS, and IMPORTANTS alert you as follows:

WARNING - Can cause injury.
CAUTION - Can cause damage to the instrument.
IMPORTANT - Can cause misleading results.

BECKMAN COULTER, INC. URGES ITS CUSTOMERS TO COMPLY WITH ALL NATIONAL HEALTH AND SAFETY STANDARDS SUCH AS THE USE OF BARRIER PROTECTION. THIS MAY INCLUDE, BUT IT IS NOT LIMITED TO, PROTECTIVE EYEWEAR, GLOVES, AND SUITABLE LABORATORY ATTIRE WHEN OPERATING OR MAINTAINING THIS OR ANY OTHER AUTOMATED LABORATORY ANALYZER.

WARNING Risk of operator injury if:

- All doors, covers and panels are not closed and secured in place prior to and during instrument operation.
- The integrity of safety interlocks and sensors is compromised.
- Instrument alarms and error messages are not acknowledged and acted upon.
- You contact moving parts.
- You mishandle broken parts.
- Doors, covers and panels are not opened, closed, removed and/or replaced with care.
- Improper tools are used for troubleshooting.

To avoid injury:

- Keep doors, covers and panels closed and secured in place while the instrument is in use.
- Take full advantage of the safety features of the instrument. Do not defeat safety interlocks and sensors.
- Acknowledge and act upon instrument alarms and error messages.
- Keep away from moving parts.
- Report any broken parts to your Beckman Coulter Representative.
- Open/remove and close/replace doors, covers and panels with care.
- Use the proper tools when troubleshooting.

CAUTION System integrity might be compromised and operational failures might occur if:

- This equipment is used in a manner other than specified. Operate the instrument as instructed in the Product Manuals.
- You introduce software that is not authorized by Beckman Coulter into your computer. Only operate your system's computer with software authorized by Beckman Coulter.
- You install software that is not an original copyrighted version. Only use software that is an original copyrighted version to prevent virus contamination.

IMPORTANT If you purchased this product from anyone other than Beckman Coulter or an authorized Beckman Coulter distributor, and, if it is not presently under a Beckman Coulter service maintenance agreement, Beckman Coulter cannot guarantee that the product is fitted with the most current mandatory engineering revisions or that you will receive the most current information bulletins concerning the product. If you purchased this product from a third party and would like further information concerning this topic, call your Beckman Coulter Representative.

REVISION STATUS

Issue A, Initial Issue, 8/03
CXP Software Version 1.0. Initial issue for customer distribution.

Issue B, 6/04
CXP Software Version 2.0.

Additions, changes or deletions were made at these locations:
1-3, 1-5, 1-31, 1-32, 2-1, 2-8, 2-9, 2-11, 3-1, 3-6, 3-11, 3-13, 4-5, 4-8, 4-10, 4-11, 4-13, 5-8, 5-12, 5-16 & 6-10.

Issue BA, 5/09
CXP Software Version 2.2 This manual has been updated to incorporate the information from the Addendum.

Additions, changes or deletions were made at these locations:
iii, 1-1, 1-36, 3-10, 4-2, 5-8, 6-11, and 6-20.

Issue BB, 12/09
CXP Software Version 2.2.

Additions, changes or deletions were made at these locations: 4-2

Issue BC, 05/10
Software Version 2.2.

Updates were made to the company corporate address.

Issue BD, 10/11
CXP Software Version 2.2 (Analysis or Cytometer)

Additions, changes, or deletions were made at these locations:
xv, xvi, 1-33, 1-36, 1-37, 2-11, 3-1 through 3-2, 3-8, 3-9 through 3-10, 3-12, 4-2, 4-13, 5-6, 5-7, 6-22, B-4, B-5, and REFERENCES-1.

Issue BE, 08/15
CXP Software Version 2.2 (Analysis or Cytometer)

Additions, changes, or deletions were made at these locations:
3-18, 3-19 and 5-4

Issue BF, 07/16
CXP Software Version 2.2 (Analysis or Cytometer)
Additions, changes, or deletions were made at these locations: xv.

Note: Changes that are part of the most recent revision are indicated in text by a bar in the margin of the amended page.

This document applies to the latest software listed and higher versions. When a subsequent software version changes the information in this document, a new issue will be released to the Beckman Coulter website. For labeling updates, go to www.beckmancoulter.com and download the most recent manual or system help for your instrument.

REVISION STATUS

CONTENTS

WARNINGS AND PRECAUTIONS, ii

REVISION STATUS, iii

CONTENTS, v

ILLUSTRATIONS, xi

TABLES, xii

INTRODUCTION, xiii

USING YOUR Cytomics FC 500 MANUALS, xiii

ABOUT THIS MANUAL, xiii

CONVENTIONS, xiv
To Choose A Command With The Keyboard, xv
Dialog Box, xv
Description of Reporting Units, xv

GRAPHICS, xv

CONTACT US, xv

1 SYSTEM OVERVIEW, 1-1

1.1 INTENDED USE, 1-1
Applications for the Instrument, 1-1

1.2 CYTOMETER CONTROLS AND INDICATORS, 1-3
FC 500 Flow Cytometry System, 1-3
Cytometer Indicator Panel, 1-4
Cytometer Ready and Laser On Indicators, 1-4
Sample Flow Rate Indicators, 1-5
Signal Amplitude Indicators, 1-5
Level Sense and Flow Indicators, 1-6
MCL (Multi-tube Carousel Loader), 1-6
Workstation, 1-7
Power Supply, 1-7
Printer (Optional), 1-7

1.3 MICROSOFT® WINDOWS® DESKTOP, 1-8
Windows 2000 Administrator Password, 1-8
Taskbar, 1-8
Start Button, 1-8
Recycle Bin, 1-9
My Computer, 1-10
Control Panel, 1-10
Using a Mouse, 1-11
Color Resolution, 1-12

1.4 LEARNING THE BASIC OPERATING TECHNIQUES, 1-13

MCL Carousels, 1-13
Bar Code Labels, 1-13
Putting a Bar Code Label on a Sample Tube, 1-13
Putting Sample Tubes in a Carousel, 1-14
Putting a Carousel in the MCL, 1-14
Removing a Carousel from the MCL, 1-15

1.5 CXP SOFTWARE SHORTCUTS, 1-16
Keyboard Shortcuts, 1-17
Drag And Drop, 1-18
Toolbar Buttons, 1-19

1.6 CREATING PROTOCOLS, 1-19

1.7 CREATING REGIONS, 1-22
Create Polygonal Regions, 1-22
Create Rectangular Regions, 1-24
Create Quadrant Regions, 1-25
Repositioning a Quadrant Region, 1-26
Create Linear Regions, 1-27
Create Multiple Linear Regions, 1-28

1.8 CREATING GATES, 1-29
Create AutoGate, 1-29
Convert a Polygonal Region to an AutoGate Region, 1-31
Automatic Gate Creation, 1-31

1.9 CREATING FLOWPAGES, 1-32
FlowPAGE Example, 1-32
Delete FlowPAGES, 1-33

1.10 CREATING PANELS, 1-33
Use Plots and Gates from Previous Test, 1-35
Use Plots and Gates from Protocol, 1-35
Use Instrument Settings, 1-35
Use Regions from Protocol, 1-35
Carry Regions from Previous Protocol, 1-35
Use Regions from This Protocol, 1-35
Use Instrument Settings from Previous Test, 1-35
Use Instrument Settings from External File, 1-35
Parameter Names, 1-35

1.11 CREATING WORKLISTS, 1-36
Before Creating Worklists, 1-36
Worklist Panel, 1-37
Worklist Test, 1-37
External Worklist Files (EWL), 1-37

1.12 VERIFYING A WORKLIST, 1-38

1.13 USING THE ONLINE HELP SYSTEM, 1-38
Access Online Help, 1-38

How to Use Help, 1-39
Help Menu, 1-39
CXP Help, 1-39
About... , 1-39
Online Support, 1-39

1.14 PERFORMANCE CHARACTERISTICS, 1-40

2 DAILY ROUTINE, 2-1

2.1 BEFORE YOU BEGIN, 2-1

2.2 DAILY STARTUP, 2-2
Check Waste and Reagent Levels, 2-2
Power the Computer and Cytometer ON, 2-3
Turning On Power, 2-3
Logging Onto Windows Software, 2-4
Logging Onto CXP Software, 2-5
Check the Power Supply, 2-6
Additional Start Up Checks, 2-8

2.3 DAILY SHUTDOWN, 2-8
When to Shut Down the Cytometer, 2-8
Before Performing Shut Down, 2-8
Power the Computer and Cytometer OFF, 2-9
After Instrument Shut Down, 2-11

2.4 EXTENDED SHUTDOWN, 2-12

2.5 CYTOMETER AUTO STARTUP, 2-14

3 QUALITY CONTROL, 3-1

3.1 INTRODUCTION, 3-1

3.2 INSTRUMENT SETUP, 3-1
Parameters, 3-1
Angle of Forward Light Scatter, 3-1
Discrimination Parameter, 3-1
Discriminator Value, 3-2
Flow Rate, 3-2
Voltages and Gains, 3-2
Plot Selection, 3-2
Regions and Gating, 3-2

3.3 QC PROCESSES, 3-3

3.4 DAILY QC, 3-4
Preparing AutoSetup Samples, 3-4

3.5 AUTOSETUP SCHEDULER, 3-6

3.6 AUTOSETUP II WIZARD, 3-8

Before Running the AutoSetup II Wizard, 3-8

3.7 APPLICATION DEFINITION WIZARD, 3-14
Before Running the Application Definition Wizard, 3-14
Setting Up QC Products, 3-18
Exporting Region Results To QC Database and Assigning QC Products, 3-20
Review QC Results, 3-21

4 RUNNING SAMPLES, 4-1

4.1 SAMPLE REQUIREMENTS, 4-1

4.2 BEFORE RUNNING SAMPLES, 4-1

4.3 RUNNING SAMPLES - MCL AUTOMATIC MODE, 4-3
Verifying A Worklist, 4-3

4.4 RUNNING SAMPLES - MCL MANUAL MODE, 4-6

4.5 RUNNING SAMPLES - SINGLE TUBE MODE, 4-10

4.6 DATA REVIEW, 4-13

5 OPERATION PRINCIPLES , 5-1

5.1 WHAT THIS CHAPTER EXPLAINS, 5-1

5.2 SAMPLE FLOW, 5-1
Sample Loading, 5-1
Hydrodynamic Focusing, 5-1

5.3 LASER BEAM SHAPING, 5-3

5.4 CELL ILLUMINATION, 5-4
Forward Scatter, 5-4
Side Scatter and Fluorescent Light, 5-4

5.5 LIGHT COLLECTION, SEPARATION AND MEASUREMENT, 5-4
Forward Scatter Collection, 5-4
Side Scatter and Fluorescent Light Collection, 5-6
Side Scatter, 5-6
Fluorescent Light, 5-9

5.6 SIGNAL PROCESSING, 5-10
Voltage Pulse Signals, 5-10
Peak Signal, 5-10
Integral Signal, 5-12
Amplification, 5-12
Signals Generated, 5-13

5.7 PROTOCOLS, 5-13
Special Protocols and Panels, 5-13
Special Panels, 5-14

5.8 AUTOMATED SOFTWARE FEATURES, 5-14

5.9 PARAMETERS, 5-14
AUXiliary Parameter, 5-14
When to Use the AUX Parameter, 5-14
TIME Parameter, 5-15
RATIO Parameter, 5-15

5.10 PLOT DISPLAY, 5-15
PRISM, 5-16
Regions, 5-17
Gating, 5-17
Data Storage, 5-17
Histogram Statistics, 5-18
Linear Region Statistics, 5-18
Log Region Statistics, 5-19
Log-Log Mean Method, 5-19
Lin-Log Mean Method, 5-20

6 TROUBLESHOOTING, 6-1

6.1 PRECAUTIONS/HAZARDS, 6-1
Laser/Radiation Precautions, 6-1
Laser Warning Labels, 6-1
Warning Labels on UPS, 6-10
Disposal Precaution, 6-10

6.2 DISPOSAL OF ELECTRICAL INSTRUMENTATION, 6-11

6.3 RoHS CAUTION LABEL, 6-11

6.4 RoHS ENVIRONMENTAL LABEL, 6-11

6.5 MAINTENANCE SCHEDULES, 6-12
Cleaning Schedule, 6-12
Replacement Schedule, 6-12

6.6 ERROR MESSAGES, 6-13
Display Locations, 6-13
CXP Software Screen, 6-13
Cytometer Status Messages Screen, 6-13
Cytometer.log File, 6-14

6.7 ERROR MESSAGE CYTOMETER.LOG FILE, 6-15
How to Access the Cytometer.log File, 6-15
From CXP Software, 6-15
From Windows Desktop, 6-15
Cytometer.Log Entry Description, 6-15
How to Search the Cytometer.log File, 6-15
Other Functions Available, 6-16
Print, 6-16
Change Font, 6-16

Find Help Topics, 6-16
Cytometerarchive.log File, 6-16

6.8 ERROR MESSAGES TABLE, 6-17

6.9 SOFTWARE MESSAGES, 6-23

6.10 LEVEL SENSE INDICATORS, 6-30
Sheath Low, 6-30
Waste Full, 6-30

6.11 CYTOMETER CONTROL WINDOW CANNOT BE VIEWED, 6-31

A HOW TO..., A-1

A.1 SOFTWARE PROCEDURES, A-1
These procedures are in the System Overview chapter in the Instructions For Use Manual., A-1
These procedures are in the Quality Control chapter in the Instructions For Use Manual., A-1
These procedures are in the Using CXP Software chapter in the Reference Manual., A-1

A.2 HARDWARE PROCEDURES, A-1
These procedures are in the Special Procedures Manual., A-1

B BAR CODE SPECIFICATIONS, B-1

B.1 BAR CODE SAMPLE IDENTIFICATION, B-1

B.2 CORRECT PLACEMENT OF THE BAR CODE LABEL, B-2

B.3 BAR CODE LABEL SPECIFICATIONS, B-2
Label Size and Thickness, B-3
Symbol Dimensions, B-3
Label and Print Quality, B-3

B.4 BAR CODE ERROR RATE, B-4

B.5 BAR CODE SYMBOLOGIES, B-5

B.6 BAR CODE LABLES, B-6
Bar Code Label Optical Characteristics at 670 nm ±10%, B-6

B.7 MCL BAR CODE READER, B-6

B.8 BAR CODE DECODER, B-7

B.9 CHECKSUM ALGORITHM, B-7

REFERENCES, REFERENCES-1

TRADEMARKS, 1

Cytomics FC 500 with CXP Software Documentation, 2

ILLUSTRATIONS

5.1 Flow Cell (Hydrodynamic Focusing), 5-2
5.2 Laser Beam Shaping, 5-3
5.3 Optical System with Optional Red Solid-State Laser, 5-5
5.4 Optical System with Optional HeNe Laser, 5-5
5.5 Single Laser Filter Block Configuration, 5-6
5.6 Dual Laser Filter Block Configuration, 5-7
5.7 Second Laser Optional Filter Configuration, 5-8
5.8 Voltage Pulse Formation, Peak Signal, 5-11
5.9 Integral and Peak Pulses, 5-12
5.10 Prism Plot, 5-16
6.1 Laser Labels on the Sensing Compartment Cover, 6-2
6.2 Laser Labels in the Optical Area, Front View, 6-3
6.3 Laser Labels in the Optical Area, Interior View, 6-4
6.4 Laser Labels on the Argon Laser Head, 6-5
6.5 Laser Labels for Optional Red Solid-State Laser, 6-5
6.6 Location of the Optional Red Solid-State Laser in the Instrument, Rear View, 6-6
6.7 Laser Labels for Optional Red Helium-Neon Laser, 6-6
6.8 Location of the Optional Red Helium-Neon Laser in the Instrument, Rear View, 6-7
6.9 Laser Labels on the Cytometer Back Panel, 6-7
6.10 Laser Labels on the MCL Probe Housing Cover, 6-8
6.11 Laser Labels on the MCL Bar Code Reader, 6-9
6.12 International Warning Symbol Locations, 6-10
6.13 Error Message on CXP Software Screen, Example, 6-13
6.14 Cytometer Status Messages Window, Example, 6-13
6.15 Example of Error Messages in Cytometer.log File, 6-14
6.16 Sheath Low Indicators, 6-30
6.17 Waste Full Indicators, 6-30
B.1 Bar Code Label, B-1
B.2 Bar Code Label Placement, B-2
B.3 Bar Code Label Specifications, B-3

TABLES

1.1 Applications for the Instrument, 1-2
6.1 Cleaning Schedule, 6-12
6.2 Error Messages, 6-17
6.3 Software Messages, 6-23
B.1 Bar Code Symbologies, B-5
B.2 Code-Related Specifications, B-6

This introductory section contains the following topics:

- USING YOUR Cytomics FC 500 MANUALS
- ABOUT THIS MANUAL
- CONVENTIONS
- GRAPHICS
- CYBERSECURITY
- CONTACT US

USING YOUR Cytomics FC 500 MANUALS

The manuals listed below are available as PDF files in the FC 500 CXP software. Printed versions of these manuals are also available by order.

Use the **Reference** manual for instrument specifications and information on installation and system options.

Use the **Instructions For Use** manual for the day-to-day running of your instrument. Go through the detailed step-by-step procedures of startup, quality control (QC), running samples, analyzing data, printing reports, reviewing QC data, shutdown. It contains safety and troubleshooting information, error messages, as well as in-depth information on the principles of flow cytometry, information about what your instrument does, and the methods it uses.

Use the **Special Procedures** manual to clean, replace, or adjust a component of the instrument.

ABOUT THIS MANUAL

The information in your FC 500 Instructions For Use manual is organized as follows:

- Chapter 1 SYSTEM OVERVIEW
  Provides the intended use of the instrument, the controls and indicators, and information on using the system's software and Workstation.
- Chapter 2 DAILY ROUTINE
  Provides information on doing daily procedures, such as Startup and Shutdown.
- Chapter 3 QUALITY CONTROL
  Provides information on how to run quality control material to verify instrument setup.
- Chapter 4 RUNNING SAMPLES
  Provides information on how to run patient blood samples.
- Chapter 5, OPERATION PRINCIPLES
  Contains a description of flow cytometry, the normal sample flow through the instrument, how light collection and signal processing are accomplished and how the parameters are derived.
- Chapter 6, TROUBLESHOOTING

  Describes laser safety precautions and the location of the laser-related labels and how to troubleshoot the system with the error messages that appear on the screen.
- Appendices
  The appendices provide reference material on the following topics:

  - HOW TO...
  - BAR CODE SPECIFICATIONS
- INDEX
  Provides page numbers for indexed information.

CONVENTIONS

This manual uses the following conventions:

- Throughout this manual your FC 500 is also referred to as the system or instrument.
- **Bold font** indicates a software option, such as **Cytometer**.
- *Italics font* indicates screen text displayed on the instrument, such as *Preparing Samples*.
- `Courier font` indicates text you have to type using the keyboard.
- ☐ indicates a key (such as Enter).
- ☐+☐ indicates that the two keys listed (such as Alt+F2) are linked for a specific function and must be pressed in this sequence:
  a. Press down on the first key listed and while continuing to press it, press down on the second key listed.
  b. Release both keys at the same time.
- ☐ ☐ indicates to press and release the first key listed then press and release the next key listed. For example: Y Enter.
- Icons/buttons to select functions on the software screen are shown within text.
  Example: .
-  indicates to use the mouse to select the screen button labeled . See Using a Mouse.
-  **File ▸▸ Save** indicates to use the mouse to select the **Save** item on the **File** menu.
- F1 through F12 are special function keys.
- A **Note** contains information that is important to remember or helpful in performing a procedure.
- The terms “screen” and “window” are used interchangeably.
- Any reference to a "clinical panel" is the equivalent of a panel that has been selected to export data to the Report Generator.
- ***SHOW ME*** means there is a video available for the procedure in the online help.

To Choose A Command With The Keyboard

After you press Alt, each menu name has one letter underlined to indicate which letter to use to pull down the menu. For example, the letter F in the File menu is underlined, press F to pull down the File menu; the letter E in the Edit menu is underlined, press E to pull down the Edit menu.

Command	Function
Enter	Accepts your selection.
Esc	Stops the operation, discarding your choices.
Tab	Moves cursor over different choices if there are multiple options - see Windows® manuals for Windows operation via keyboard.
Alt+Tab	When you have more than one application Window open, use Alt+Tab to switch between tasks.

Dialog Box

Dialog boxes receive commands or information; for example, a file name dialog box receives information about a file name.

OK	Accepts the information you have selected or typed.
Cancel	Stops the operation, ignoring your choices.

Description of Reporting Units

Unless otherwise stated, all parameter units are shown in the US unit format (cells/µL) throughout the manuals.

GRAPHICS

All graphics, including screens and printouts, are for illustration purposes only and must not be used for any other purpose.

CYBERSECURITY

CAUTION The instrument workstation is vulnerable to malware and viruses from physical media such as CDs, DVDs, or USB drives. To reduce the risk of data corruption or unauthorized setting changes, only use physical media such as CDs, DVDs, or USB drives that are known to be free from viruses and malware. Contact your IT professional for assistance.

CONTACT US

If you have any questions, contact our Customer Support Center.

- Worldwide, find us via our website at www.beckmancoulter.com/customersupport/support.
- In the USA and Canada, call us at 1-800-369-0333.
- Outside of the USA and Canada, contact your local Beckman Coulter Representative.

The information in this section includes:

- INTENDED USE
- CYTOMETER CONTROLS AND INDICATORS
- MICROSOFT® WINDOWS® DESKTOP
- LEARNING THE BASIC OPERATING TECHNIQUES
- CXP SOFTWARE SHORTCUTS
- CREATING PROTOCOLS
- CREATING REGIONS
- CREATING GATES
- CREATING FLOWPAGES
- CREATING PANELS
- CREATING WORKLISTS
- USING THE ONLINE HELP SYSTEM
- PERFORMANCE CHARACTERISTICS

1.1 INTENDED USE

The Cytomics FC 500 is a system intended for use as an in vitro diagnostic device for the qualitative and quantitative measurement of biological and physical properties of cells and other particles. These properties are measured when the cells pass through one or two laser beams in single-file.

The instrument can simultaneously measure forward scatter, side scatter, and five fluorescent dyes using one or two lasers at 488 nm and either 635 nm (Solid-state laser) or 633 nm (HeNe laser). Therefore, the instrument can perform correlated multiparameter analyses of individual cells.

Applications for the Instrument

The FC 500 is considered an equivalent system to the COULTER EPICS XL and the COULTER EPICS XL-MCL flow cytometers when used with the forward scatter Field Stop in the factory set position (1-19°).

Table 1.1 lists the many applications for the instrument. In addition to human cells, other cell types can be analyzed, such as:

- Plant cells
- Marine plankton
- Animal cells
- Bacteria

Table 1.1 Applications for the Instrument

Applications	Cell Types	Sample Preparation (refer to the reagent's package insert)	Measurements	Parameters
Cell surface antigens	Whole blood Buffy coats Mononuclear cells Dissociated tissue Platelets Bone Marrow	ImmunoPrep reagents with the Q-PREP Workstation, the Multi-Q-Prep Workstation or the TQ-Prep Workstation Whole blood lysing reagent kit Cell gradient separation Fluorescent-labeled antibodies Thrombo Fix platelet stabilizer	Cell size and granularity FITC, RD1, ECD, PC5, PC7, APC and APC-CY7, PC7	Forward and side scatter (Log/Linear) Fluorescence one, two, three, four and five (Log/Linear) Prism Ratio Time AUX/Peak
Nucleic acids	Whole blood Dissociated tissue Frozen sections Paraffin sections Body fluids	Various staining methods, including: Ethidium bromide Propidium iodide DNA Prep reagents LeukoSure	Cell size and granularity Green, red, and orange fluorescence	Forward and side scatter Fluorescence one, two, three, four and five (Log/Linear) Ratio, AUXPeak
Kinetics	Whole blood Buffy coats Mononuclear cells Tissue culture cells	Various methods, including: Fluo 3 fluorescence	Cell size and granularity Green fluorescence Time	Forward and side scatter Fluorescence one Ratio Time
Cell function	Whole blood Buffy coats Mononuclear cells Tissue culture cells	Various methods and dyes, including: DCFH-DA $DiOC_5(3)$ FDA	Cell size and granularity Green fluorescence	Forward and side scatter Fluorescence one
Reticulocytes	Whole blood	Thiazole orange coriphosphine O (CPO) Acridine Orange	Cell size and granularity Green fluorescence Red fluorescence	Log/Linear Forward and Side Scatter Log Fluorescence one Log Fluorescence four

1.2 CYTOMETER CONTROLS AND INDICATORS

FC 500 Flow Cytometry System

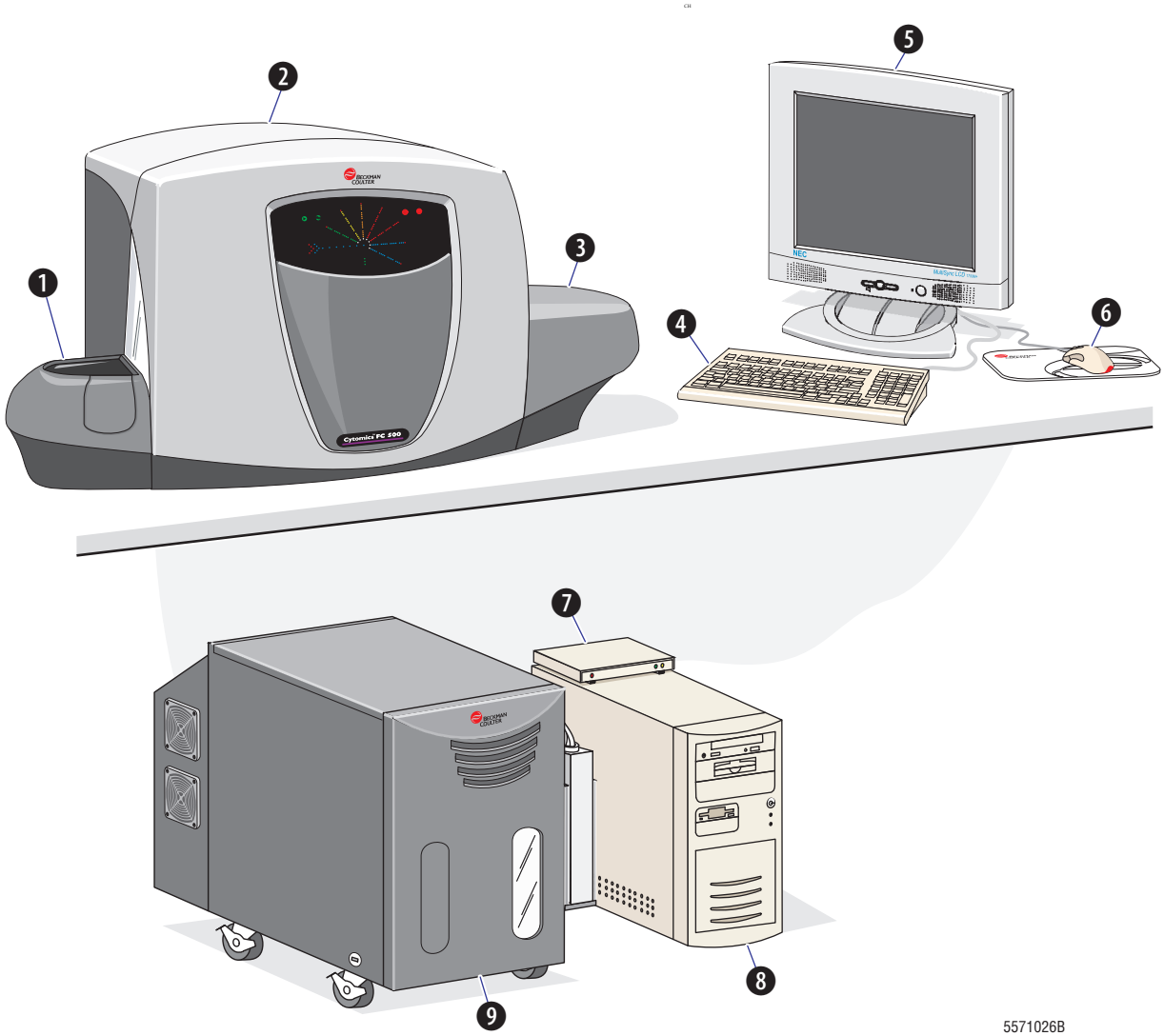

❶	MCL	❻	Mouse
❷	Cytometer	❼	USB box
❸	HeNe laser option	❽	Computer
❹	Keyboard	❾	Power Supply
❺	Monitor		

Cytometer Indicator Panel

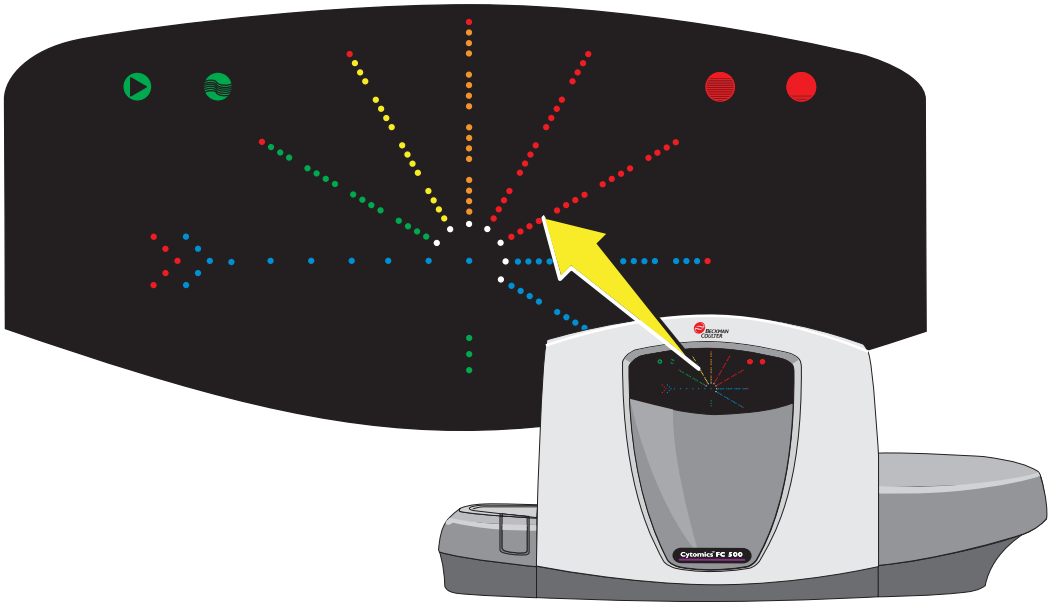

Cytometer Ready and Laser On Indicators

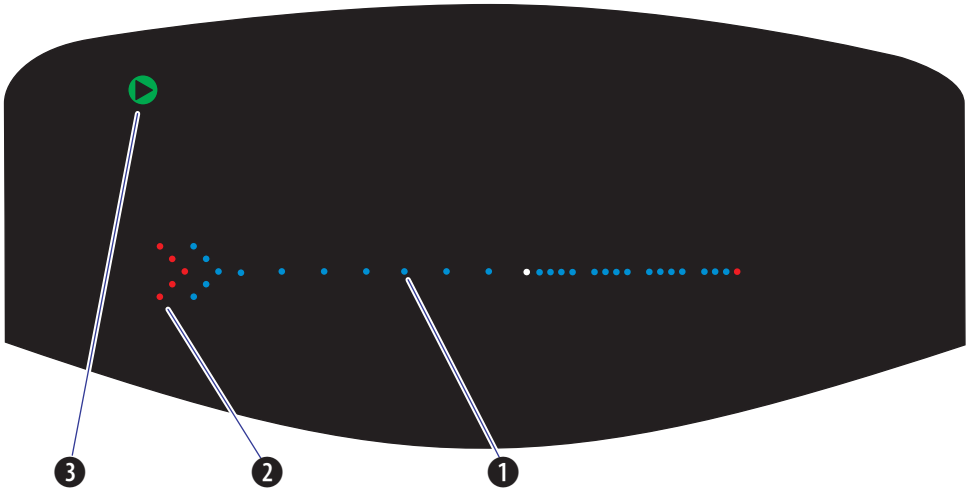

❶ Blue means the Argon laser is on.

❷ Red means the red laser shutter is open.

❸ Green means Cytometer is on and in the Ready state.

Sample Flow Rate Indicators

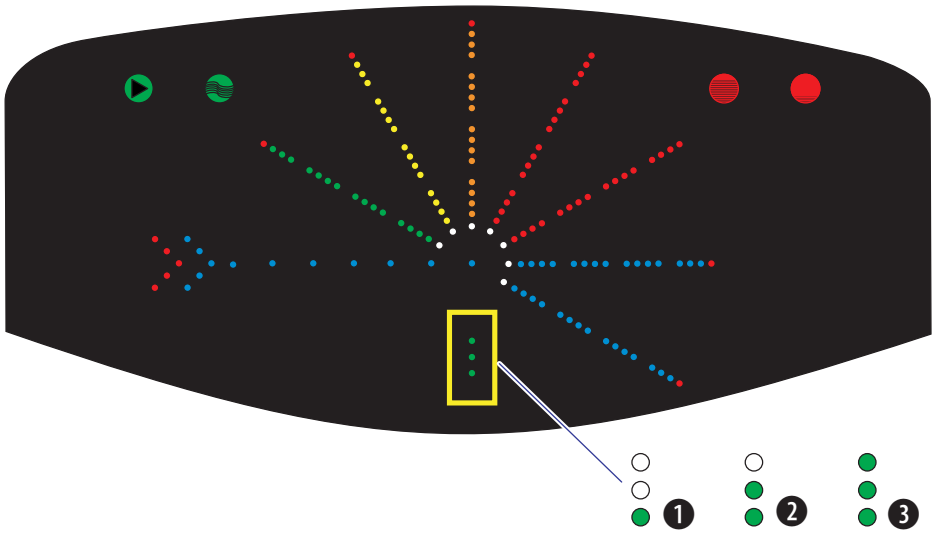

❶ Low Sample Flow

❷ Medium Sample Flow

❸ High Sample Flow

Signal Amplitude Indicators

Note: When both log and linear parameters are selected for the same sensor, the amplitude display defaults to the log signal.

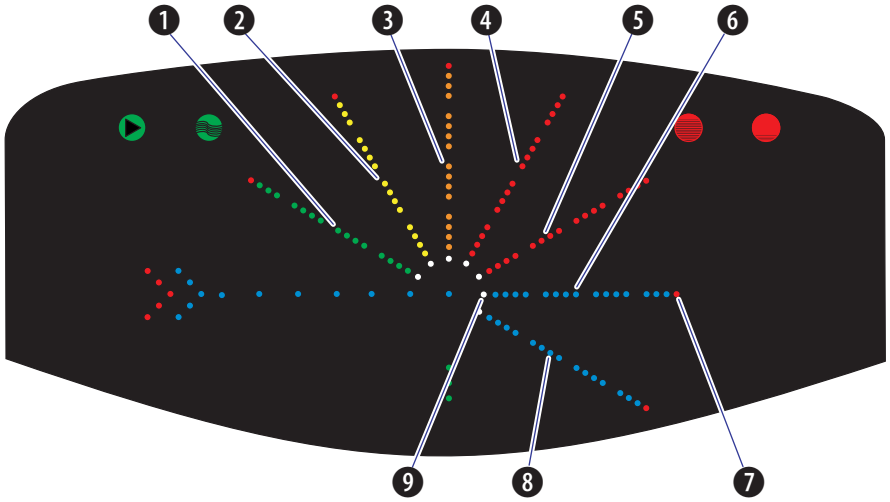

❶ FL1

❷ FL2

❸ FL3

❹ FL4

❺ FL5 or Aux

❻ FS

❼ Red means overrange

❽ SS

❾ White indicates Aux source and Aux channel (FL5)

Level Sense and Flow Indicators

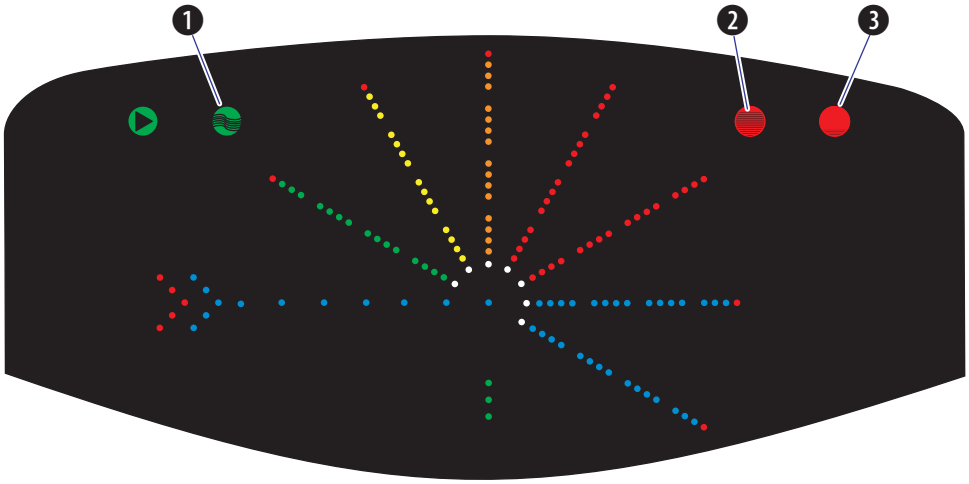

❶ Sheath Flow

❷ Waste Full

❸ Sheath Low

MCL (Multi-tube Carousel Loader)

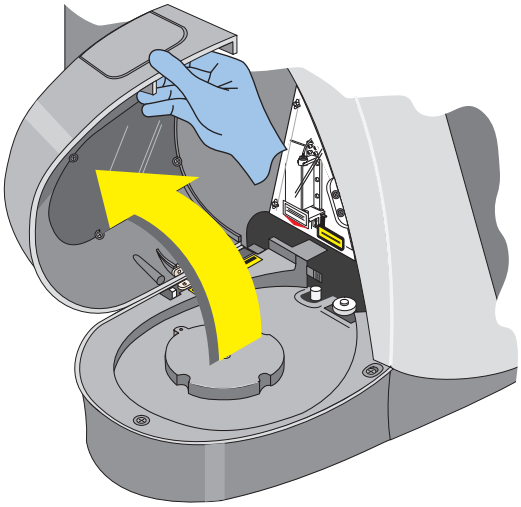

Workstation

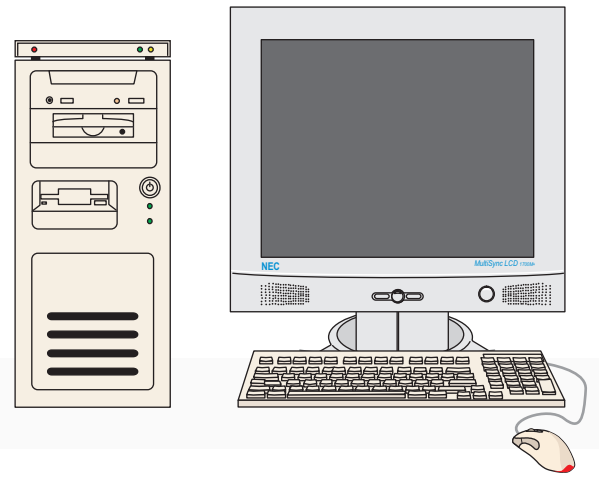

Power Supply

Your instrument has one of these configurations. Follow the procedures in the documentation that applies to your Power Supply configuration.

Universal Power Supply



Voltage-Specific Power Supply

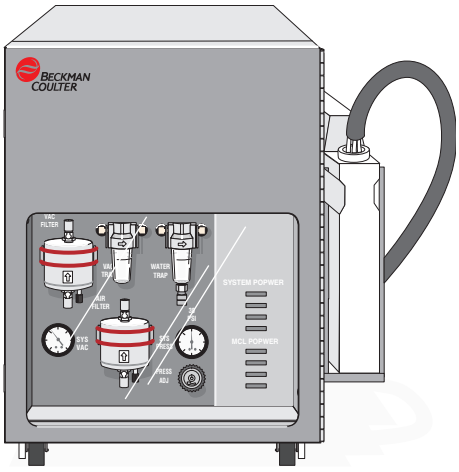

Printer (Optional)

This manual does not explain how to use the optional Printer. Operating instructions from the Printer manufacturer are included with the Printer.

1.3 MICROSOFT® WINDOWS® DESKTOP

Windows 2000 Administrator Password

Be sure to maintain your Windows 2000 Administrator password in a secure location. If you lose or forget the Windows 2000 Administrator password, you must reimage your hard drive, causing the loss of all data.

Taskbar

At the bottom of the screen is the Taskbar. It contains the Start button on the left-hand side and a clock on the right. Other icons are displayed on the Taskbar depending on the configuration of the hardware and software of your particular computer.



When a program is opened, a button for that particular program appears within the Taskbar. You can switch between programs by clicking with the mouse on these buttons.

Start Button

The Start button allows you to gain access to the computer programs and settings. When you click the mouse on 

on the Taskbar, a menu appears showing the computer system's main programs and program group icons. The following CXP software "shortcut" options are available on this Desktop Menu Bar only if they have been installed.

Other standard Windows functions are also displayed and these are briefly described below:

Programs: displays a list of programs that are installed on the computer that you can start.

Documents: lists the most recently opened documents.

Settings: displays the user-configurable system components, including the Control Panel.

Search: displays a menu, which allows you to find Files, Folders or Computers to which you are connected if Networking.

Help: opens the Windows Help, which provides guidance in operating the Windows System.

Run: displays a screen dialog box for starting or loading a program or opening a file with an MS-DOS command.

Shut Down: displays a window dialog box with the options for Shutting Down the Computer System, restarting or other specific options as displayed.

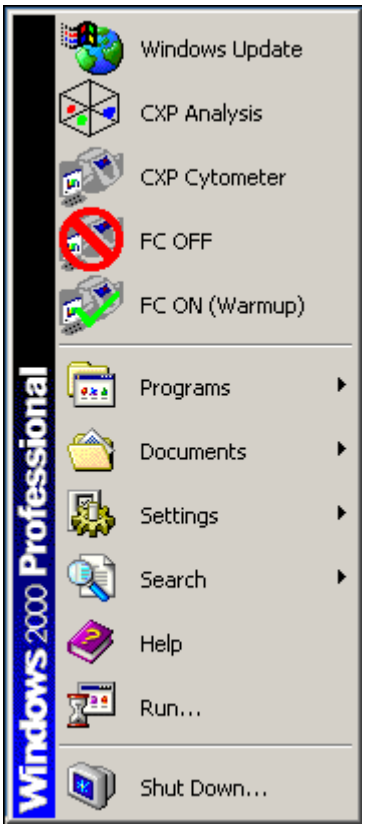

Recycle Bin

You can delete files from your computer and place them in the Recycle Bin  where you can, if necessary, retrieve them later. However, if you wish to permanently remove files, this is achieved by emptying the Recycle Bin.

My Computer

The My Computer icon  on the Windows Desktop allows access to the contents of your computer (installed drives, the Control Panel, Printers and other icons as appropriate to the way the particular computer system was configured).

If you wish to see the contents of any drive or folder, double click the mouse on its icon. For Microsoft Windows 2000, the computer hard disk is known as C drive.

The Floppy Drive is Drive A, and any CD-ROM drive is known as D Drive unless Windows assigns another suitable letter.

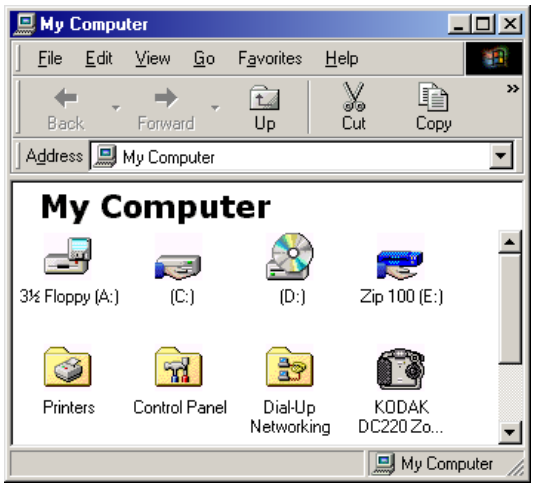

Control Panel

The **Control Panel** holds the tools that you can use to alter the way Windows looks and works.

To view the **Control Panel**:

Click on **Start** and point the mouse to Settings.

Click on the Control Panel icon.

Note: The icons in the Control Panel vary according to the particular hardware and software settings for your computer. When you click on an icon, a short description of the setting is shown.

Double click on an icon to see the setting that you can change for that item.

For a full description of the possible settings, refer to the Microsoft Windows Help text and any books or manuals supplied with your computer system.



Using a Mouse

The Mouse, a handheld input device, controls the movement of a pointer on the computer screen. As the mouse is moved, the pointer moves on the screen. When you position the pointer over an object on the screen, you can click the mouse button to do different tasks. You can click the mouse button to select files, double click to open and work in files, or click and drag to move files.

As most functions involve pointing at an object on the screen and then clicking the mouse button, the following show some of the common actions:

Click:	Press and release the left mouse button ❷ once.
Select:	Point at a particular object and click once.
Double-click:	Quickly press and release the left mouse button ❷ twice.
Right-click:	Press and release the right mouse button ❶ once.
Point:	Move the mouse until the cursor is over the desired icon or object.
Press:	Hold down a mouse button.
Drag:	Hold down the left mouse button ❷ while moving the mouse.

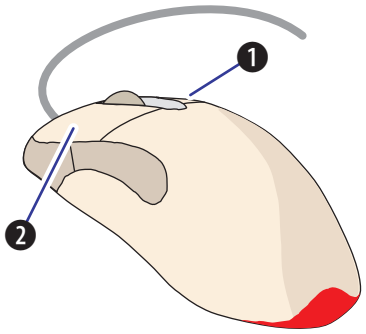

You can switch left ❷ and right ❶ mouse buttons. For more information about using a mouse, see Windows Help.

The CXP software is used with a mouse and exclusively uses the left mouse button except where specifically indicated within the Help Text.

Color Resolution

For the best results, you need to reset your computer to a color resolution of at least 1024 x 768 pixels and High Color (16 bit).

1 Close down any applications that you may have running, including any that have been minimized on the Tool Bar.

2 Select **My Computer** and then choose the Control Panel icon.

3 From the **Control Panel**, choose the **Display** option.

4 Select the **Settings** tab.

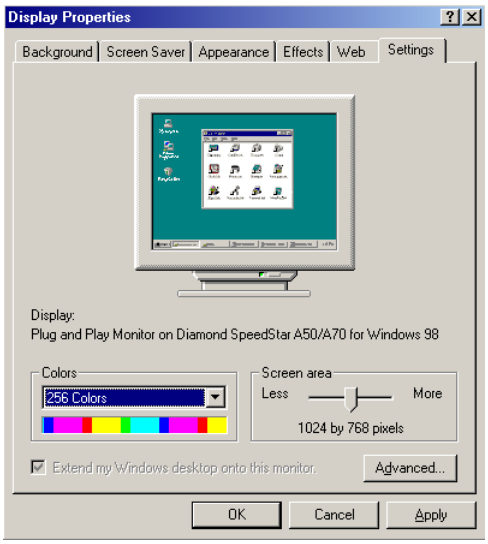

5 Move the **Screen Area** slider to set 1024 x 768 color resolution.

6 Set the **Colors** dialog box using the drop down menu to set High Color (16 bit).

7 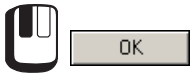 to complete the operation. You may need to restart the computer (a dialog box is displayed if this is required).

Note: 3dfx voodoo based video cards must be set to High Color (16 bit) for 3D acceleration to function correctly.

1.4 LEARNING THE BASIC OPERATING TECHNIQUES

Before reading the other chapters in this manual:

- Read about the Cytometer Control screens in the Reference manual.
- Read this chapter to become experienced with using the MCL.

Practice the basic techniques until you feel comfortable using them. If, later on, you need to use a basic technique but cannot remember how, use the Online Help Index or Search tab to look it up and get the step-by-step instructions.

MCL Carousels

The FC 500 flow Cytometer starter kit has:

- Two carousels, each with 32 tube positions.
- A sheet of bar code labels, numbered 01 to 99, for you to use to identify the carousels.

Bar Code Labels

You can put a bar code label on each sample tube. See the BAR CODE SPECIFICATIONS appendix.

IMPORTANT Sample misidentification can occur from the use of incorrect, poor quality, damaged, dirty or improperly placed bar code labels. Follow the BAR CODE SPECIFICATIONS to create your bar code labels to prevent incorrect sample identification. Risk of erroneous results if the bar code label is placed incorrectly on sample tubes. To prevent misidentified samples, affix the bar code label as shown below so the MCL can read the label.

Putting a Bar Code Label on a Sample Tube

1. Carefully align the label with the tube.
2. Press the label down securely, including edges and corners, without wrinkles or folds.
   - ❶ 25.4 mm (1.0 in.) minimum
   - ❷ 7.5 degrees.

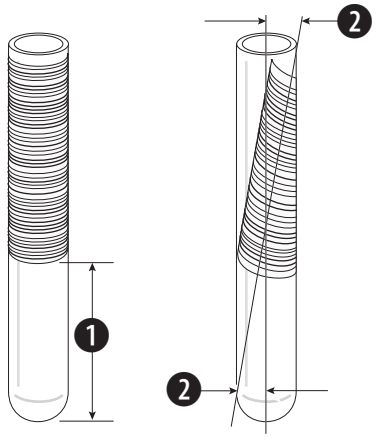

Putting Sample Tubes in a Carousel

- The orientation of a tube with a bar code label ❶ does not matter. The MCL rotates the tube to find the bar code label.
- Do not skip tube positions within a panel. The FC 500 flow cytometer does not skip a protocol in a panel when a carousel tube position is empty. If you lose a sample, delete that protocol from the panel using the Acquisition Manager.
- You can skip a single-tube position to separate two panels based on your tube location setup in Acquisition Manager.

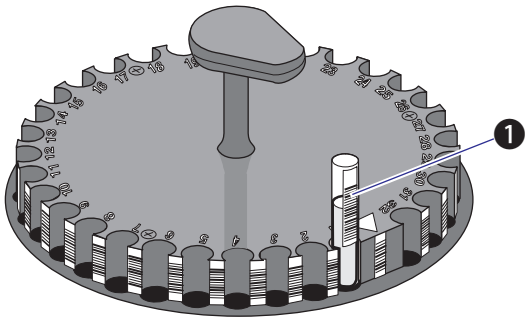

Putting a Carousel in the MCL

1 Open the MCL cover.

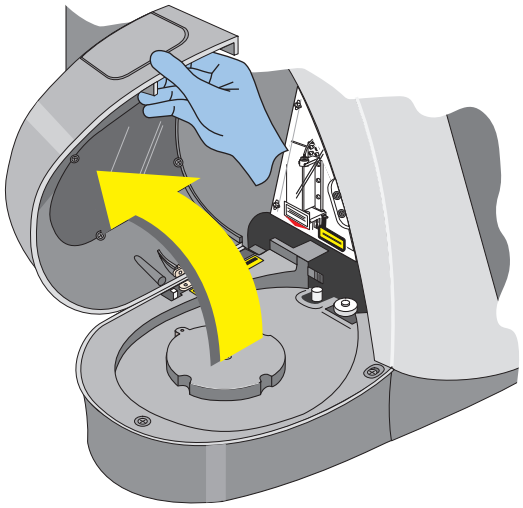

2 Pick up the carousel. Line up the carousel with its turntable, and then push down. The carousel is in home position when the handle points toward the back.

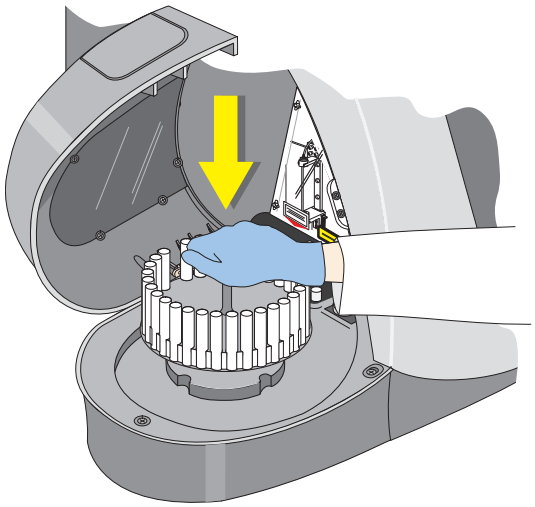

3 Close the MCL cover.

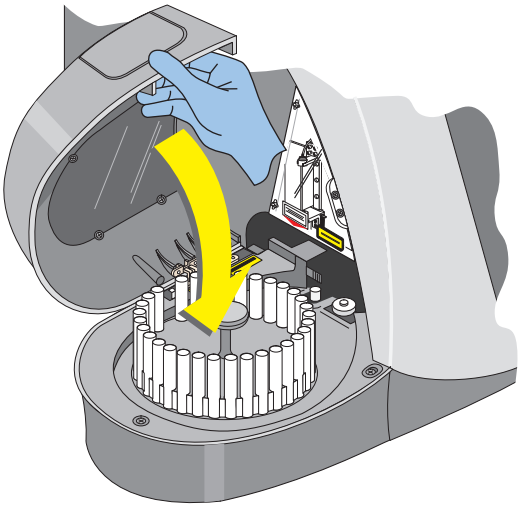

Removing a Carousel from the MCL

1 Open the MCL cover.

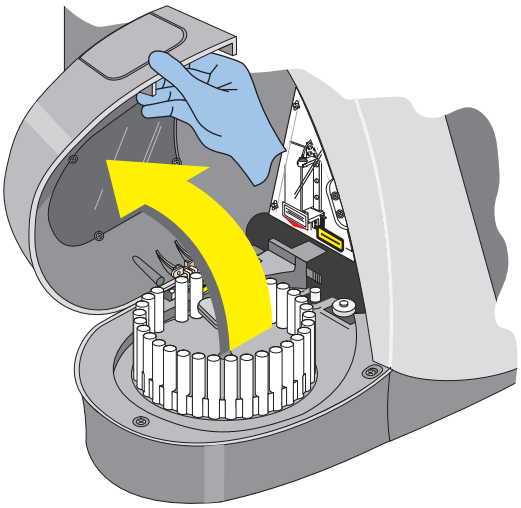

2 Remove the carousel.

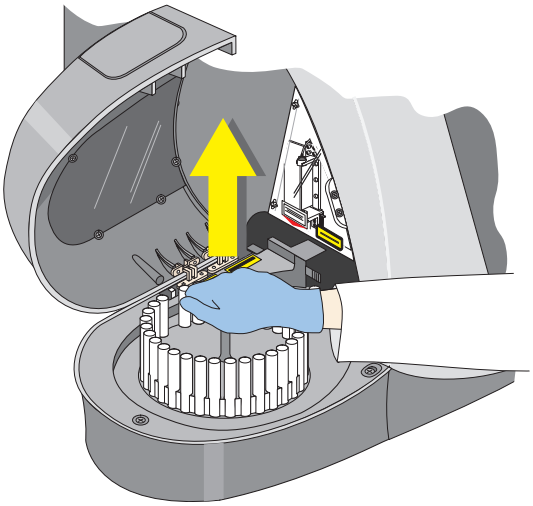

3 Close the MCL cover.

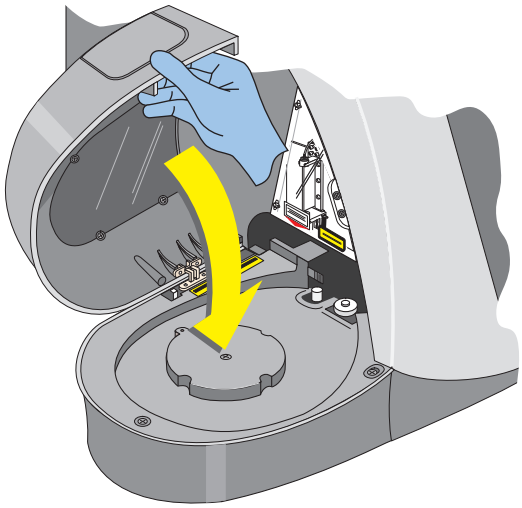

1.5 CXP SOFTWARE SHORTCUTS

CXP software uses several standard Windows techniques for providing shortcuts to functions.

Keyboard Shortcuts
Drag And Drop
Toolbar Buttons

Keyboard Shortcuts

Where Ctrl+X means hold Ctrl down and press X.

Ctrl+C	Copy
Ctrl+V	Paste
Ctrl+X	Cut
Ctrl+Z	Undo
Ctrl+Y	Redo
Ctrl+W	Workspace Preferences
Ctrl+T	Tile Special
Ctrl+P	Print
Ctrl+N	New Protocol
Ctrl+S	Save Protocol
Ctrl+O	Open Listmode File
Ctrl+F	Format Plot
Ctrl+D	Duplicate Plot
Ctrl+Q	Listmode QuickCOMP
Ctrl+L	View Cytometer Log
Ctrl+1	Create new Dot Plot
Ctrl+2	Create new Histogram Plot
Ctrl+3	Create new Contour Plot
Ctrl+4	Create new Density Plot
Ctrl+5	Create new Overlay Plot (CXP Analysis Software only)
Ctrl+6	Create new Tomogram Plot (CXP Analysis Software only)
Ctrl+7	Create new Surface Plot (CXP Analysis Software only)
Ctrl+8	Create new Prism Plot
Ctrl+9	Create new Legend Plot
Ctrl+0	Create new Info Plot
Alt+F4	Exit CXP software
F1	Context Sensitive Help
F5	Refresh Screen
F7	Publish to Excel (or text file)
F9	Start Acquisition
F10	Stop Acquisition
F11	Pause Acquisition
F12	Abort Acquisition

Drag And Drop

Dragging and dropping is a shortcut method of opening, moving and deleting files or other objects.

Within CXP software the Drag and Drop technique can be used for several functions, with some operations Ctrl can be held down to modify the default behavior.

Drag From…	Action
Resource Explorer	
Worklist	Drag a stored Worklist to Acquisition Manager.
Panels	Add a panel to the current Worklist by dragging a panel to the current Worklist.
Protocols	Drag a protocol to the Workspace or Acquisition Manager.
Listmode files	Drag a file to a series of plots, or with Ctrl pressed ONLY the current plot.
Histogram files	Drag histograms to an overlay plot.
Protocol Explorer	
Gates	Drag a gate to gate ALL plots on a region, or with Ctrl pressed ONLY the current plot.
AutoMATOR Setup	
Rearrange files	Reorder files for playback using the AutoMATOR application.
Modify Color Precedence	
Reorder Gates	Drag gates into the required precedence order.
Plots	
Regions	Drag copies of regions from one plot to another, with Ctrl pressed gate logic is also copied.
Plot Images	Drag the current plot image to a third party application (such as, MS Paint, Power Point®).
Overlay Plot	Reorder histograms in the overlay.
Statistics	Reorder the statistics under the plots.
Tile Special	
Plots	Reorder plots on the desktop.
Cytometer Control (Cytometer Only)	
Parameters	Reorder parameters in the “selected Parameter” list.
Acquisition Manager	
Worklist Columns	Reorder Worklist columns to any desired order.

Toolbar Buttons

Toolbars form an essential part of the CXP software. The application entered and the mode you are operating at the time determines whether a particular Toolbar display is available.

Toolbars can be moved using the Drag and Drop method with the mouse around the CXP software desktop or customized to suit the preferences of each user. See Toolbars - Customize Toolbars in the Reference manual.

The Toolbar elements are:

FILE OPTIONS TOOLBAR

PLOT OPTIONS TOOLBAR

REGIONS OPTIONS TOOLBAR

GATE, COLOR, STATS AND HELP TOOLBAR

FLOWPAGE TOOLBAR

ACQUISITION MANAGER TOOLBAR

AutoMATOR TOOLBAR

OVERLAY TOOLBAR (Analysis only)

CYTOMETER TOOLBAR.

1.6 CREATING PROTOCOLS

---

1 **File ▸▸ New ▸▸ New Protocol.**

---

2  and **Parameters** button on the Cytometer Control Acquisition Setup Tab.

---

3 Choose the Parameters to be acquired and 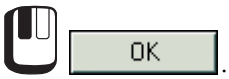

.

4 If the parameters have changed,

a. 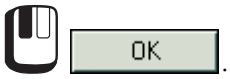

.

b. Enter the parameter name and 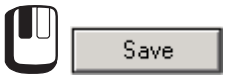

.

c. 

on the Cytometer Control screen.

5 Create the Plots required for acquisition.

6 If analysis is to be performed during acquisition, create the required Regions and Gates, and also select the required statistics from the **Analysis ▸▸ Select Results** option.

7 **File ▸▸ Save Protocol As** to save the protocol.

8 Enter the sample information into the correct position in the Acquisition Manager Worklist. See Acquisition Manager in the Reference manual to modify the Acquisition Manager display.

9 Set the listmode file name options from the Workspace Preferences - LMD File Name tab.

10 Set the acquisition options from the Workspace Preferences - Acquisition Options tab.

11 Set up the Worklist and run samples.

12  Setup Mode on the Cytometer Control Acquisition Setup Tab and adjust the instrument settings on the Cytometer Control Detector Tab.

13 When satisfied with the data, , deselect Setup Mode and continue acquisition.

14 Once sufficient data is collected,  **File ▸▸ Save Protocol** to update the protocol with the new instrument settings.

1.7 CREATING REGIONS

Create Polygonal Regions
Create Rectangular Regions
Create Quadrant Regions
Create Linear Regions

Create Polygonal Regions

See also: Interactive Polygonal Region Editing in the Reference manual.

---

1 Highlight a dual parameter plot (click on the title bar).

---

2 .

---

3 A Polygonal Region cursor is displayed on screen.

---

4 Place the cursor at the point where you want the Region to begin.

---

5 Click and release the mouse button, to fix the point (a start box is displayed on screen).

---

6 Continue in this manner until the desired number of points has been chosen.

When drawing a Region, if you decide that it is not the one you want, press Esc before the region is completed. The Region is deleted.

To change the Region type, and stay in the current window, choose from the Region menu or click a Region shortcut button for whatever Dual Parameter Region type you wish.

7 Close the Region by returning the cursor to the starting box and clicking to conclude Region creation.

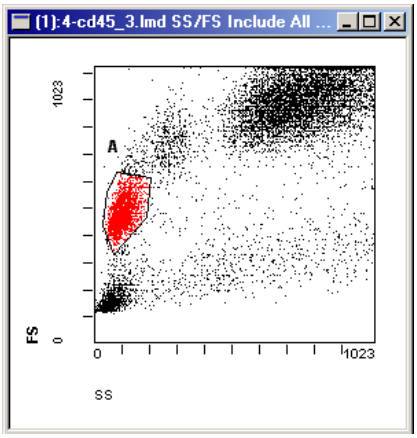

8 The Region Name appears on the plot.

9 See Dot Plot Data Source to display percentages with the Region name.

Create Rectangular Regions

See also: Interactive Rectangular Region Editing in the Reference manual.

---

1 Highlight a dual parameter plot.

---

2 .

---

3 A Rectangular Region cursor  appears in the highlighted plot.

---

4 Position the cursor to the point where you want the Region to begin.

---

5 Click and release the mouse button. A Rectangular Region start box is displayed on screen. By moving the mouse you can increase and decrease the size of the Rectangular Region. When the desired Rectangular Region appears, click the mouse button to complete the Region.

---

6 The Region Name appears on the plot.

Create Quadrant Regions

1 Highlight a dual parameter plot.

2 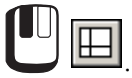.

3 A crosshair cursor ⊞ is displayed in the current window.

4 Position the cursor on the plot where you want the intersection point of the region and  to show the quadrant lines (cross hair).

5 Move the regions to the required position, if needed, then  to set this position.

6 CXP software shows the Quadrant's name in each of its four Regions.

When drawing a Region, if you decide that it is not the one you want, press Esc before the Region is completed. The Region is deleted.

Note: Quadrant Region is a special case of rectangular Regions - four Rectangular Regions are simultaneously created with one mouse click and exist thereafter as four independent Rectangular Regions (with the exception that they do not satisfy Automatic Gate Creation). Deleting one or more still leaves remaining Regions intact if using Region/View/Modify Delete. If you use the graphical quadrant delete, then all four Quadrant Regions are deleted as a group.

Repositioning a Quadrant Region

1 Mouse over the Quadrant region lines to get the ↔, ↕ or ✥ cursor.

2 Reposition the region.

a.  + hold and drag ↔ to move the vertical divider.

b.  + hold and drag ↕ to move the horizontal divider.

c.  + hold and drag ✥ to move the Quadrant region.

3 Release the mouse button.

See also: Interactive Quadrant Region Editing in the Reference manual.

Create Linear Regions

This option requires two points to be set giving an upper and lower channel boundary for every Region.

---

1 Highlight a single parameter histogram.

---

2  .

A Linear Region cursor appears in the current window.

---

3 Position the cursor on the chosen plot to the point where you want the Region to begin. Click, two vertical lines with a horizontal bar appears.

---

4 Move the cursor left or right, up or down until the desired end point of the Region is reached.  to accept the settings and anchor the region.

When drawing a Region, if you decide that it is not the one you want, press Esc before the Region is completed. The Region is deleted.

After setting the Region position, the long vertical lines are replaced by short channel markers to prevent cluttering of the plot display.

The horizontal bar is positioned approximately at the horizontal cursor position when the region is set.

See also (in the Reference manual):
Interactive Linear Region Editing
Status Bar (Linear)
X Coordinate
Integral

Create Multiple Linear Regions

1 Highlight a single parameter histogram and .

2 A Parallel cursor appears in the current window.

3 Position the cursor on the chosen plot to the point where you want the Region to begin. Click, two vertical lines with a horizontal bar is displayed. A stop box appears in the right hand top corner or the window.

4 Move the cursor left or right, up or down until the desired end point of the Region is reached.  to accept the settings and anchor the region.

5 Repeat this procedure until all Regions are set.

6 When you have drawn all of your Multi-Linear Regions, press Esc or move the cursor onto the stop box in the right hand top corner, click. This ends the Multi-Linear sequence.

See also: Interactive Multi-Linear Region Editing in the Reference manual.

1.8 CREATING GATES

Create AutoGate

Note: If a stop count is used on a plot that contains an AutoGate region, the stop count is not exact.

---

1 in the plot you want to create an AutoGate on.

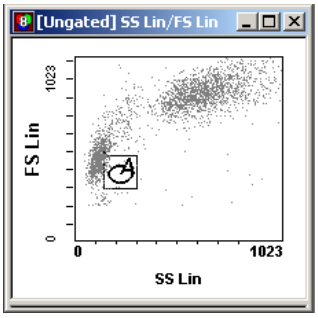

---

2 or .

---

3 on the population to AutoGate.

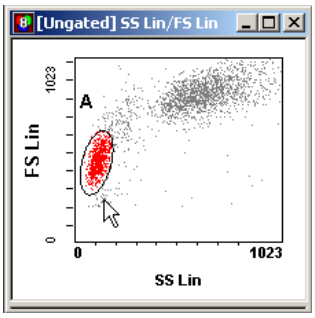

4 To specify the AutoGate Sensitivity and Travel,

a. the region.

b. Click the right mouse button on the region and **Region Properties**.

c. Specify the AutoGating Sensitivity and Contour Travel, if necessary, and OK.

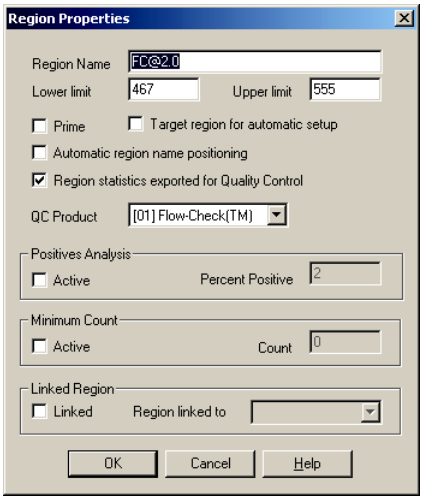

5 Right mouse click on the plot you want to assign the AutoGate to and select Format to display the Plot Properties dialog.

6 the gating drop down list and select the AutoGate to gate the plot on the AutoGate.

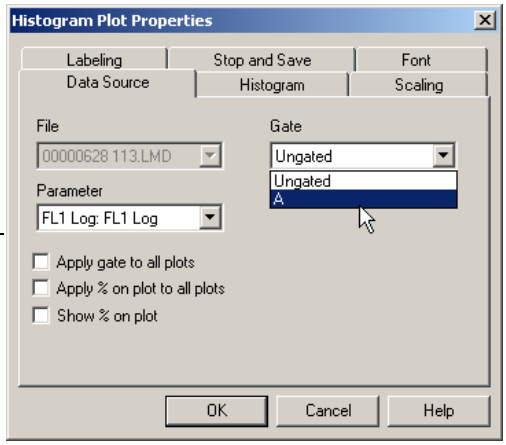

7 Repeat steps 5 and 6 to assign the AutoGate to other plots or **Apply gate to all plots**.

Note: If you select **Apply gate to all plots** you must go back to the plot that contains the AutoGate and unassign the AutoGate from the plot.

Convert a Polygonal Region to an AutoGate Region

1 region to make it active.

2 Click the right mouse button on the region and **Region Properties**.

3 either **Elliptical** or **Contour in** the Polygonal Region Properties screen.

Automatic Gate Creation

This option allows you to create a new gate automatically when a new Region is drawn. If this option is not selected you must use **Analysis ▸▸ Create Modify Gates** to create gating logic.

Regions copied using Ctrl+Drag and Drop into a plot assign the region as a gate.

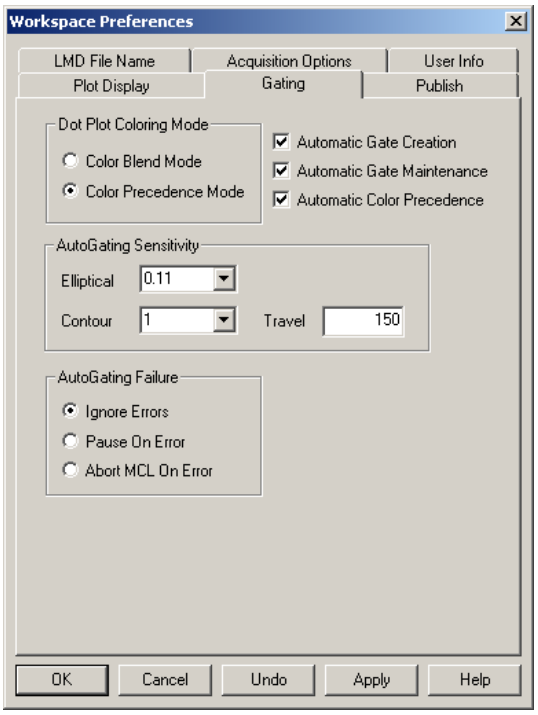

1.9 CREATING FLOWPAGES

FlowPAGE Example

Below is a typical example of a FlowPAGE. This is a screen view only. A full printed page outputs at a much higher resolution. See also: FlowPAGE Menu in the Using CXP Software chapter in the Reference manual.

1  to create a blank FlowPAGE.

2  to insert a picture.

3 Insert Flowpage Plots.

4 Insert a FlowPAGE Statistics Table.

5 Insert a FlowPAGE Textbox.

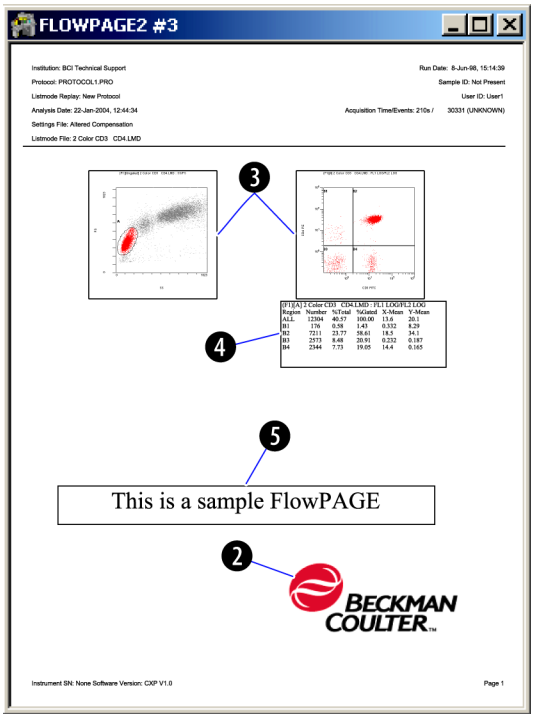

6 Click the right mouse button on any object on the FlowPAGE to select additional formatting options.

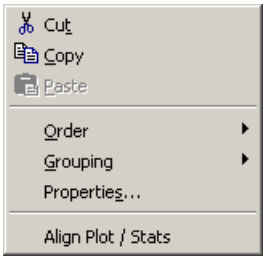

Delete FlowPAGES

1 in the upper left corner of the FlowPAGE window to be deleted and **Close**.

Note: FlowPAGES in a locked protocol can not be inserted, deleted or edited.

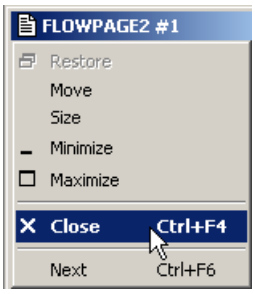

1.10 CREATING PANELS

The Panel Wizard allows you to create a Panel for use in the Acquisition Manager.

Remarque : The default protocol (Ctrl N) must be saved prior to being used in the construction of a panel. If the default protocol is not saved with a specific name prior to using it in a panel, the protocol name will default to "setup.def" in the panel template with no associated regions.

1 **File ▸▸ New Panel** to start the Panel Wizard.

2 Enter the New Panel name.

3 Select the Number of Tests required. The default value is 1 and the maximum is 32.

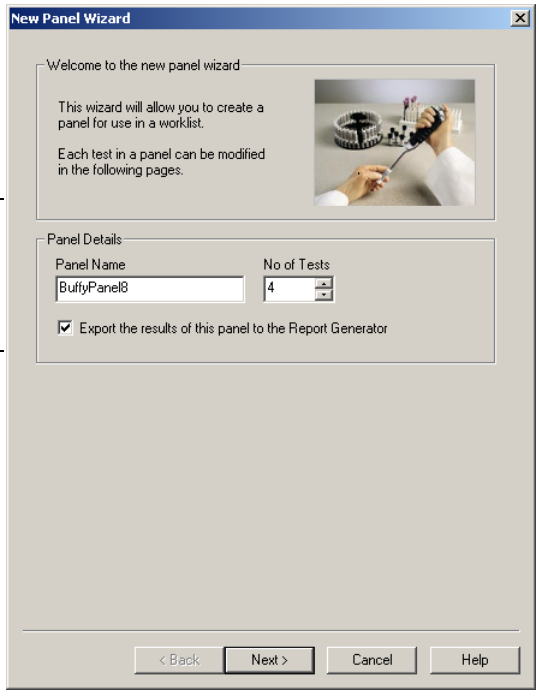

4 **Export the results of this panel to the Report Generator** if you want a Patient Panel Report generated when you run this panel. See Panel Report in the Reference manual.

5 Next >.

6 Choose your Protocol Settings.

Use Plots and Gates from Previous Test
Use Plots and Gates from Protocol
Use Instrument Settings

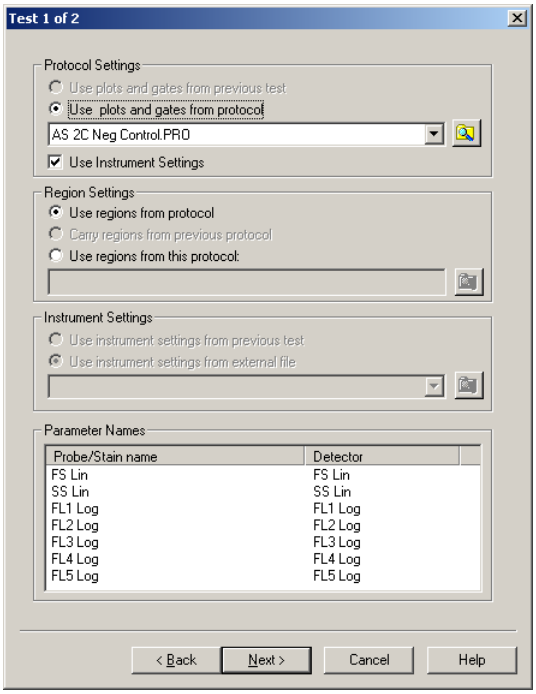

7 Choose your Region Settings.

Use Regions from Protocol
Carry Regions from Previous Protocol
Use Regions from This Protocol

Next >.

8 Choose your Instrument Settings.

Use Instrument Settings from Previous Test
Use Instrument Settings from External File

9 Double on parameter names under **Probe/Stain name** to assign the Parameter Names.

10 Repeat steps 6 through 9 for each test.

11 

.

Use Plots and Gates from Previous Test

Allows you to use Gates and Plots from a previous Test but is not active for the first Test within a Panel.

This option is not available if **Use plots and gates from protocol** is chosen.

Use Plots and Gates from Protocol

Allows you to select Plots and Gates from a specific Protocol, chosen from the drop down list box.

This option is not available if **Use plots and gates from previous test** is chosen.

Use Instrument Settings

Uses the instrument settings from the selected Protocol. If the checkbox is disabled, this allows the **Instrument Settings** below to be active.

Use Regions from Protocol

This option loads all regions stored within the current protocol.

Carry Regions from Previous Protocol

Selecting this option allows region positions to be carried from the previous test in a panel. Any regions of the same type and drawn on the same parameters are carried.

Use Regions from This Protocol

This option loads the regions and region positions from the selected protocol.

Use Instrument Settings from Previous Test

Uses the Instrument settings from the previous Test but is not active for the first Test within a Panel.

This option is not available if **Use instrument settings from external file** is selected.

Use Instrument Settings from External File

Use Instrument Settings from an External File such as Listmode or Protocol [Settings] files that you choose from the drop down list box.

This option is not available if **Use instrument settings from previous test** is selected.

Parameter Names

Allows you to choose the Parameter Names for each tube within a Panel.

1.11 CREATING WORKLISTS

Before Creating Worklists

- If no Worklist is visible, **View ▸▸ Acquisition Manager** to display the Worklist panel.
- Unless the current Worklist has been saved using the **Save Worklist** button within the ACQUISITION MANAGER TOOLBAR, current Worklist settings are not available.
- Do not save scheduled AutoSetup Applications as a Worklist. Applications are intended to be "scheduled." Do not add any protocols or panels to Acquisition Manager that has scheduled Applications or AutoSetup II protocols. Always select **New Worklist** after scheduled QC Applications or AutoSetup protocols are run.
- Modifications to a multi-tube panel may impact any associated panel templates or Worklists. Beckman Coulter recommends that all templates and Worklists containing a panel that has been modified be validated before use.

IMPORTANT Risk of erroneous results if a protocol or panel is edited and saved or deleted. Any Worklist containing the edited and saved or deleted protocol or panel must be recreated. If the Worklist is not recreated, the protocol or panel in the Worklist may not match the newer version of the protocol or panel.

---

1 to create a new Worklist or to clear current Worklist from the Acquisition Manager screen.

---

2 Drag And Drop panels and protocols from the Resource Explorer to the Acquisition Manager. Information added in this way always appears at the end of the Worklist.

---

3 After all the information has been added, you can use Drag And Drop to change the order.

Worklist Panel

1 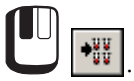.

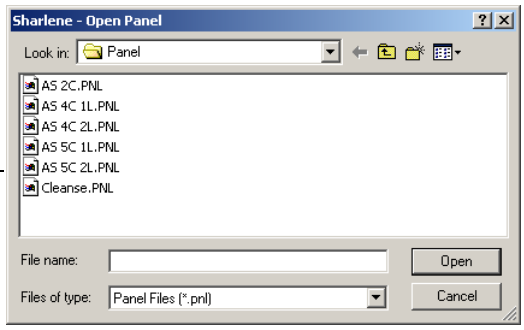

2 Select which panel you wish to open and .

3 After all the information has been added, you can use Drag And Drop to change the order.

You can use this option to add another Panel to an existing Worklist.

Worklist Test

 to insert a single Row at the end of the current Panel.

External Worklist Files (EWL)

1 . from the Acquisition Manager toolbar.

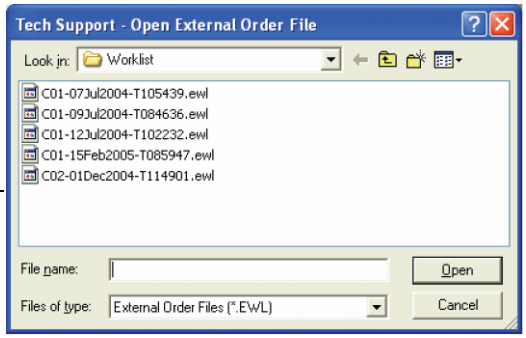

IMPORTANT When running EWL files, do not edit Sample ID1 for any multi-tube panels. If a Sample ID1 needs to be edited, delete the panel from the EWL file and add it to a new Worklist in the CXP software. Always verify Sample IDs before reporting results.

2 Select which EWL file you wish to open and then .

1.12 VERIFYING A WORKLIST

Always verify carousel and tube location fields before starting acquisition and ensure that the Acquisition Manager information accurately reflects the tubes in the carousel being run. The order of the tubes in the carousel must match the order of the tubes in the Worklist.

The default protocol (Ctrl N) must be saved prior to being used in the Worklist. If the default protocol is not saved with a specific name prior to using it, that tube may be run with unexpected protocol settings depending on the Save Protocol selection in Workspace Preferences. Also, the default protocol name will default to "setup.def" in any associated panel template and have no regions.

1.13 USING THE ONLINE HELP SYSTEM

Your Cytomics FC 500 system provides an online Help system that allows you to search for information on specific system-related topics through the **Contents, Index,** and **Search** options.

The Help system is an electronic version of the Instructions For Use Manual, Reference Manual, and Special Procedures Manual. It includes a table of contents, an index for finding information quickly, and a glossary of definitions.

When you access the Help menu, there are three options available: **CXP Help**, **About…,** and **Online Support**.

Access Online Help

Use one of these options to access the online Help system.

.

 **Help** ▸▸ **CXP Help**.

F1.

Note: If you cannot access the online Help system, contact your Beckman Coulter Representative.

How to Use Help

 on the Help Navigation Bar.

Information about the Help window and instructions for using help are displayed in the navigation pane.

❶ Toolbar
❷ Navigation Bar
❸ Topic Pane
❹ Navigation Pane

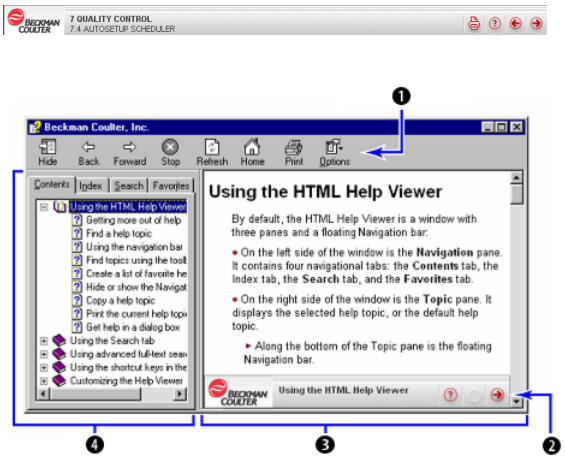

Help Menu

CXP Help

Opens the FC 500 CXP online help.

About…

Displays:

- CXP software copyright
- CXP software version information
- Runtime Protocol or New Protocol (when listmode file is replayed) or Locked Protocols.
- Algorithms... that takes you to a list of current analysis algorithms and their descriptions.

If you are asking for technical support by telephone, fax, or email, please quote the CXP software build number, which is accessible from menu **Help ▸▸ About…**, and ensure you know the Romlock number which is written on the body of the Romlock.

Online Support

Beckman Coulter Web Site

If you have an Internet connection and click the mouse on http://www.beckmancoulter.com, you can access the Beckman Coulter Web Site through your Web Browser program.

You can then access the latest information concerning the up-to-date software releases and other items of interest.

1.14 PERFORMANCE CHARACTERISTICS

Refer to the package insert of the Quality Control Materials listed in the Reference manual for the performance characteristics for the preparation method you are using.

2.1 BEFORE YOU BEGIN

This chapter explains the daily startup procedures. Before doing these procedures:

---

1 Read the OPERATION PRINCIPLES chapter. Using your system is easier if you have a general understanding of how it works.

---

2 Read the SYSTEM OVERVIEW chapter. It contains instructions for

- CYTOMETER CONTROLS AND INDICATORS
- LEARNING THE BASIC OPERATING TECHNIQUES.

---

3 Read each procedure entirely.

---

4 If conditions cause static charge to exist in your lab, be sure to properly ground yourself before touching the instrument.

---

5 Shutdown and restart the system computer once per day to allow the virus protection program to run. See Power the Computer and Cytometer OFF and Power the Computer and Cytometer ON. Do not start a full disk virus scan while running CXP software.

2.2 DAILY STARTUP

Perform the following steps to start up the system. If you have set up CYTOMETER AUTO STARTUP and the Cytometer is running, skip ahead to Check the Power Supply.

Check Waste and Reagent Levels

1 Empty the waste container and verify tubing is connected to the cap.

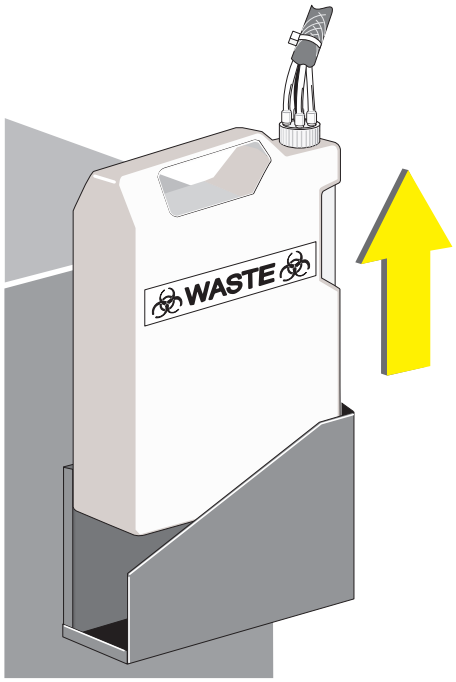

2 Check the sheath fluid level and fill the sheath container if necessary.

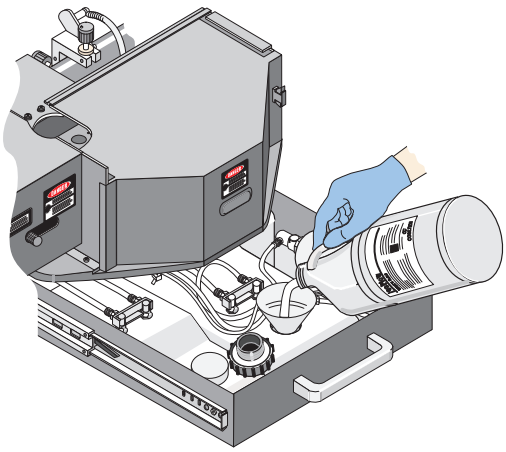

3 Check the cleaning agent fill level ❶ and fill the cleaning agent container if necessary.

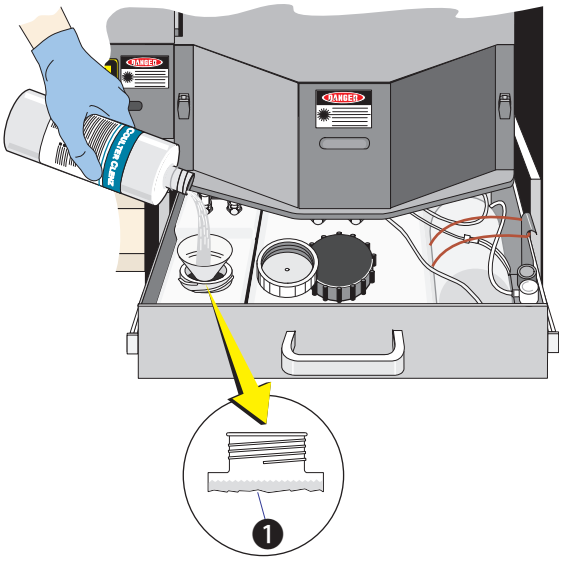

Power the Computer and Cytometer ON

Turning On Power

Turn on the system at the computer.

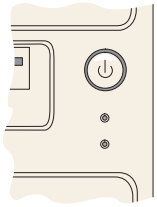

Logging Onto Windows Software

When the **Log on to Windows** screen appears,

a. Check that the **User name** field displays `Administrator` or your Windows log-in user name. If not, type in your user name.

   Note: When first installing the software, the **User name** field must display `Administrator`.

b. Ensure the checkbox is unchecked.

c. Enter your Password and

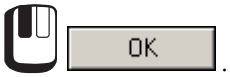

.

Note: If your computer is part of a network, you may need to enter the User name and Password assigned by your network manager.



Logging Onto CXP Software

1 

to start the software and power up the Cytometer.

Allow about 40 minutes to warm up the system before performing QC or running samples.

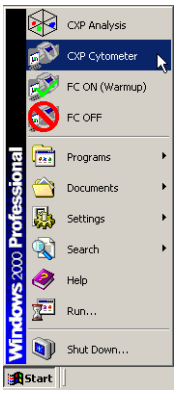

2 At the **CXP Cytometer Startup Wizard [Page 1 of 2]** screen:

a. Highlight your User ID.

b. Enter your Password.

c. 

.

Note: For additional information about this screen, see MULTI-USER SIGN ON. If you need to set up User IDs, see User Administration.

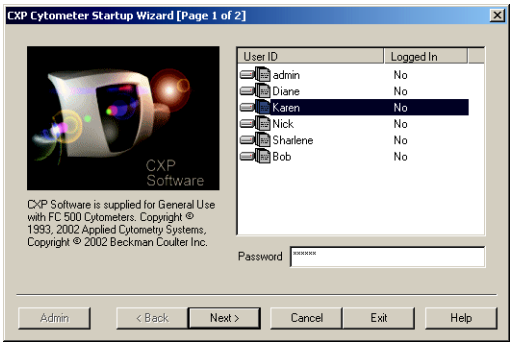

3 Select a protocol, if needed.

4 

.

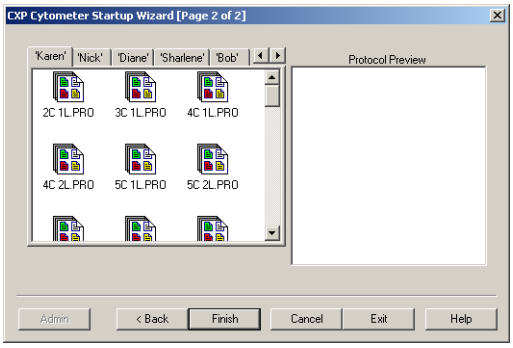

5 During system startup, the following series of Cytometer status messages are displayed. The startup cycle includes a prime cycle.

Startup in Process
Verification
Initialization
Awaiting Sample

Check the Power Supply

1 Open the Power Supply door and check the WATER TRAP, AIR FILTER, and VACuum FILTER.

Contact your Beckman Coulter Representative if:

- The TRAP is >1/3 full.
- The FILTERS have any fluid.

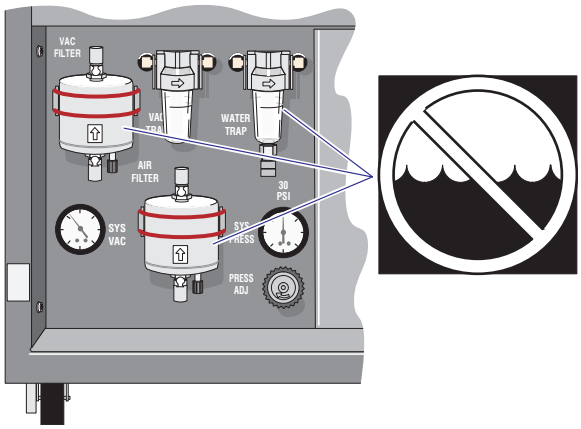

2 Check the SYStem VACuum gauge. If it reads ≥–17 in. Hg, contact your Beckman Coulter Representative.

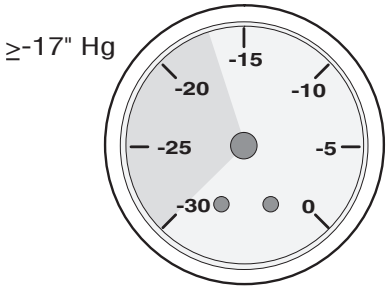

3 Check the SYStem PRESSure gauge. If it does not read between 28 and 32 psi, do the following:

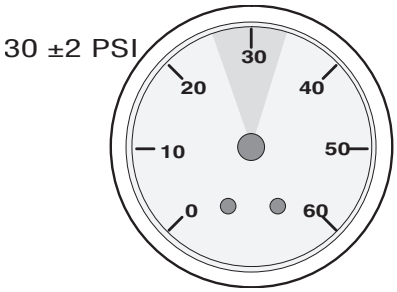

a. Pull the PRESSure ADJuster knob out toward you.

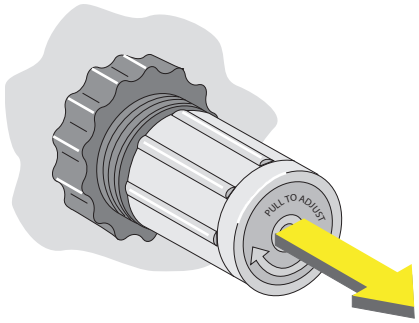

b. Adjust the pressure to 30 ±2 psi.

❶ To decrease, turn to the left.

❷ To increase, turn to the right.

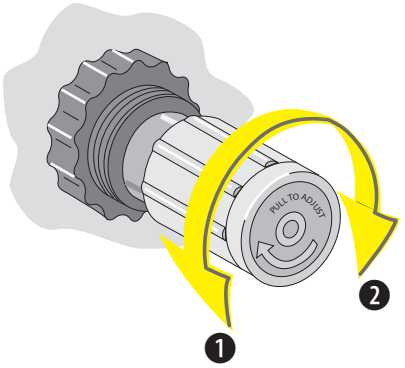

c. Push in on the knob to lock it into place.

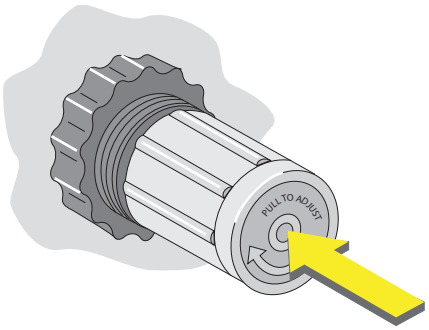

4 Check the VACuum TRAP.

If it is >1/4 full of fluid CLEAN THE VACUUM TRAP.

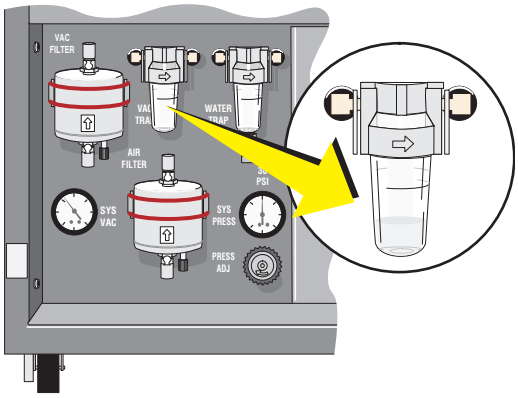

5 Close the Power Supply door.

6 Record the startup checks on the Maintenance Log or on the Action Log Sheet.

Additional Start Up Checks

1 Check that the MCL vortex function mixes samples by running a blank sample.

2 Refer to the manuals that came with your Printer to:

- Perform Printer diagnostics.
- Check that there is an adequate paper supply in the Printer.
- Check ink cartridges if you have a color Printer and replace if necessary.

2.3 DAILY SHUTDOWN

When to Shut Down the Cytometer

- Shut down the instrument at least once a day, even if it is intended for use 24 hours per day.
- Leave the instrument shut down for at least 30 minutes before restarting.
- Shutdown and restart the system computer once per day to allow the virus protection program to run. See Power the Computer and Cytometer OFF and Power the Computer and Cytometer ON. Do not start a full disk virus scan while running CXP software.

Before Performing Shut Down

1 Perform the Routine Cleaning Procedure in the Special Procedures Manual.

2 Perform the Vacuum Line Cleaning Procedure in the Special Procedures Manual.

Power the Computer and Cytometer OFF

1  to put the Cytometer in the Idle mode.

2  in all open windows.

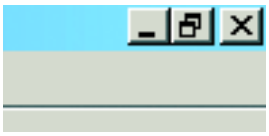

3 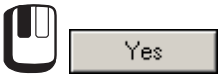 or 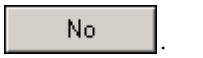.

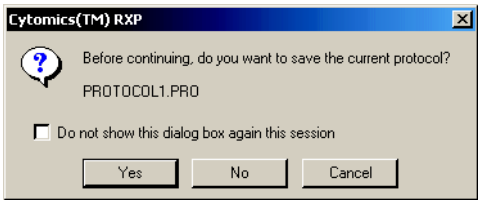

4  to turn off the Cytometer.

5  to shutdown the Workstation.

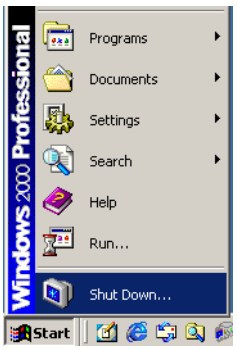

6 When the **Shut Down Windows** screen appears:

Ensure **Shut down or Standby** appears below **What do you want the computer to do?**



7 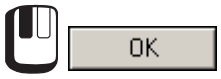

.

The Cytometer automatically turns off.

8 Turn off the monitor and Printer separately.

After Instrument Shut Down

WARNING Risk of chemical injury from bleach. To avoid contact with the bleach, use barrier protection, including protective eyewear, gloves, and suitable laboratory attire. Refer to the Safety Data Sheet for details about chemical exposure before using the chemical.

1 Wipe down all exposed surfaces (and the 40 tube holder if used) with 10% bleach solution and then 70% ethanol. Pay special attention to the Sampling area.

2 Keep the system shut down for 30 minutes. Before running samples, do the daily startup and quality control procedures.

Reminder:

Clean the air filters once a week.

Clean the sample probe and sample head once a week.

Clean the sheath fluid container once a month.

Clean the cleaning agent container every 60 days.

3 Record daily shutdown and cleaning on the Maintenance Log or on the Action Log Sheet.

2.4 EXTENDED SHUTDOWN

If you intend to leave the instrument in the shutdown state for an extended amount of time:

---

1 Remove the cleaning agent and sheath fluid containers.

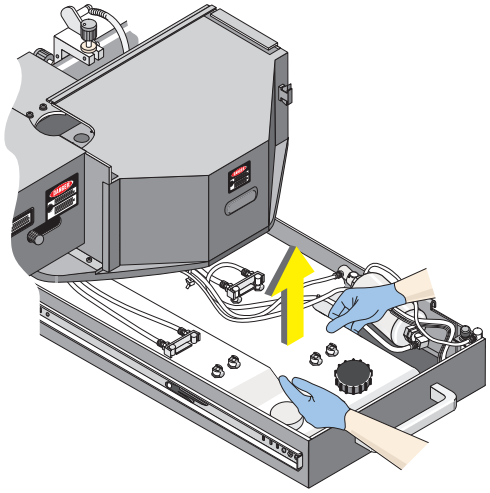

---

2 Rinse the inside of both containers with water.

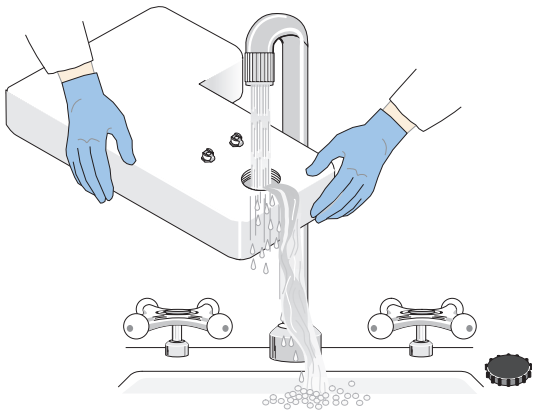

3 Replace the cleaning agent and internal sheath fluid containers. Fill both containers with water instead of reagent.

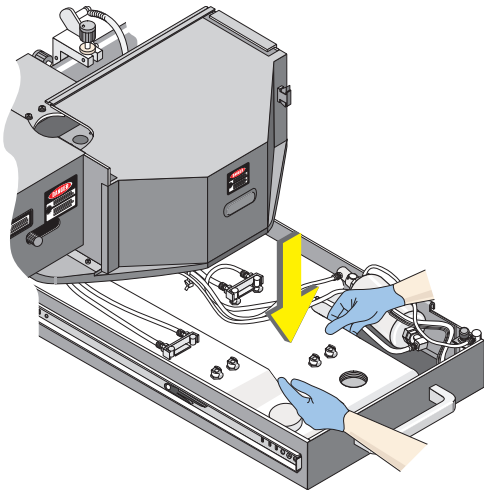

4 Perform the Routine Cleaning Procedure. Use tap water in tubes 1-4 instead of bleach in tube 1 and IsoFlow sheath fluid in tubes 2-4.

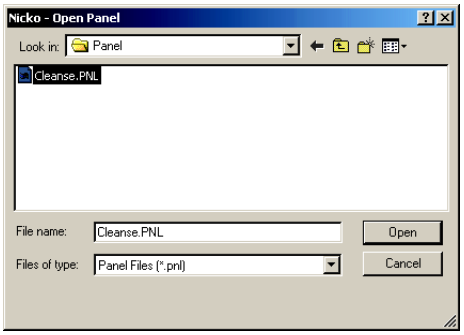

5 When you start up the instrument for the first time after the extended shutdown,

- Clean the sheath fluid container
- Clean the cleaning agent container
- Fill the sheath fluid container
- Fill the cleaning agent container
- Perform the Routine Cleaning Procedure
- Perform DAILY QC before running samples.

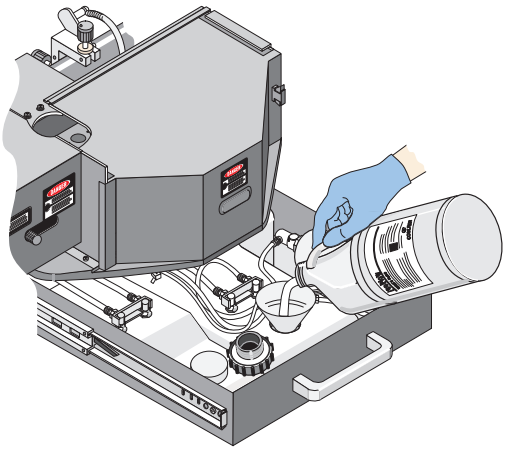

2.5 CYTOMETER AUTO STARTUP

You can set up the system to automatically Startup or Shutdown the Cytometer. The computer must be on with Windows running to allow Auto Startup to run.

1 Using Windows Explorer, double click on C:\CXP\Tasks.exe.

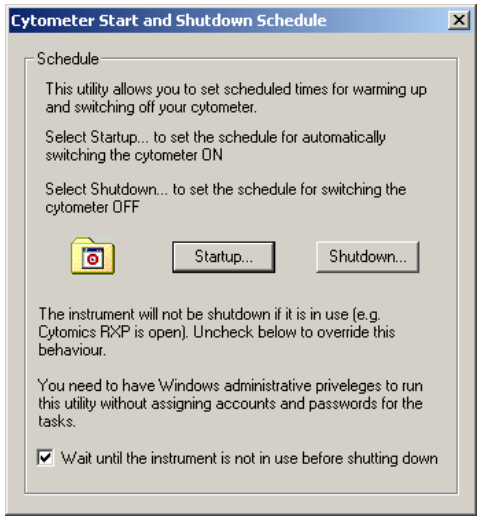

2 

.

3 On the Task screen, enter C:\CXP in the **Start in:** field.

You can also enter comments and set a password, although they are not required.

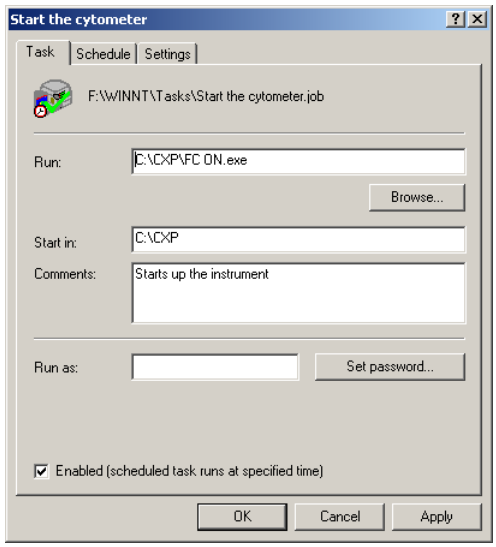

4 Schedule to schedule when you want the Startup or Shutdown task to occur.

New and enter your settings.

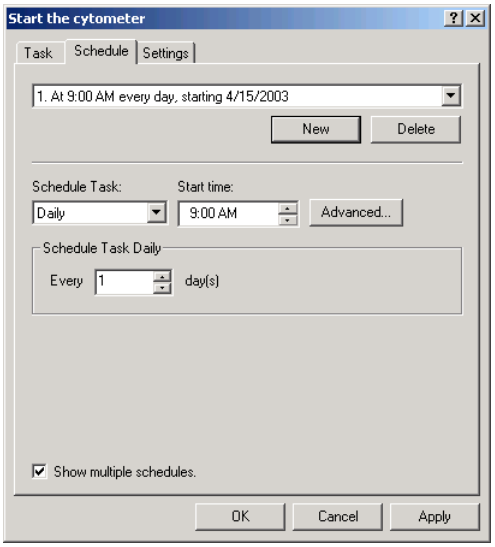

5 Settings to specify additional settings.

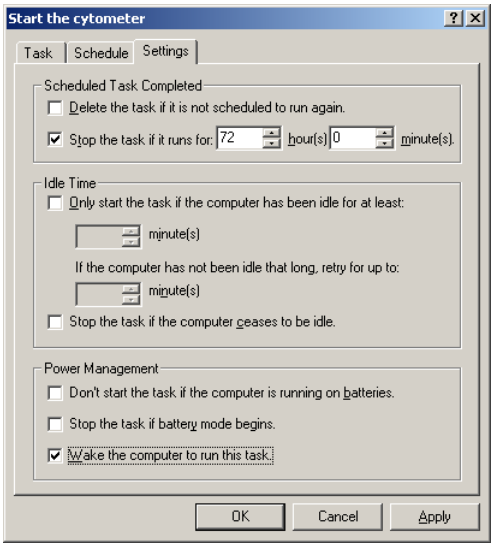

6 If you want to set up automatic Cytometer shutdown, Shutdown... and perform steps 3 through 5.

3.1 INTRODUCTION

Perform the following quality control checks to ensure that your system is working accurately and precisely. The protocols needed for these quality control (QC) procedures are included with your system Software. The package inserts for your Quality Control Materials have instructions for establishing your laboratory's normal ranges for daily use.

You must re-establish your laboratory's ranges:

- When you use a new lot of fluorospheres.
- Whenever a major part of the system has been serviced or replaced (for example, laser alignment or replacement, PMT replacement).

In addition to doing the daily quality control procedure in this chapter, you should make a quality control check for the specific applications you are running.

3.2 INSTRUMENT SETUP

To obtain consistent and reliable results, there are basic instrument configuration settings that you should select and optimize for your application. These include:

Parameters

Angle of Forward Light Scatter

Discrimination Parameter

Discriminator Value

Flow Rate

Voltages and Gains

Plot Selection

Regions and Gating

Parameters

Parameters are the signals generated by the instrument sensors. See SIGNAL PROCESSING. Also see Cytometer Control Parameter Setup in the Reference manual for additional information about the available parameters.

Angle of Forward Light Scatter

The size of the particle of interest should be taken into account when making a choice of forward scatter collection angles. See Forward Scatter Collection for additional information on forward scatter collection angle. Also see POSITION THE FIELD STOP in the Special Procedures manual for instructions on selecting the appropriate forward scatter collection angle.

Discrimination Parameter

The various parameters produce differences in signals ranging from robust to weak signals which in turn affect the amount of noise in the baseline. The discriminator is applied to the parameter of your choice, based on your application.

Discriminator Value

A threshold value is applied to the selected parameter signal to control the amount of background that is measured. Setting the discriminator too low could include a higher amount of debris while a setting that is too high might eliminate the desired events. See Discriminators in the Reference manual for information on selecting and modifying discriminators.

Flow Rate

The flow rate governs the events per second that pass through the flow cell. The concentration of the particle of interest should be considered when selecting a flow rate so that coincidence (doublets) is minimized. Generally, the faster the flow rate, the higher the probability for creating coincidence and higher CVs (broadening of the peak). See Flow Rate in the Reference manual for instructions on changing the flow rate.

Voltages and Gains

These settings are used to position the signal for each parameter in the desired position. See Cytometer Control Acquisition Setup Tab in the Reference manual for instructions on changing signal voltages and gains.

Plot Selection

There are several plot types available to view data: bivariate (dot plots/density plots) and histograms. Ability to view data to affirm appropriate cytosettings (including voltage, gain, and discriminator assignment) is determined by parameter assignments to the selected plots. See PLOTS MENU in the Reference manual for instructions on creating plots.

Regions and Gating

Regions and gates allow for statistical information to be generated from the data set. Creation and placement or regions and gate assignments must be verified for the dataset. See ANALYSIS MENU in the Reference manual for instructions on creating and modifying regions and gates.

3.3 QC PROCESSES

The chart below shows which QC materials are needed for each QC process.

QC Process	QC Material Used
Verify fluidics and laser alignment	Flow-Check Fluorospheres (Flow-Check 675 Fluorospheres, Flow-Check 770 Fluorospheres). Verify HPCV versus expected value. Export results to the QC Database and review the QC data.
Adjust high voltage and gain for a given application	Flow-Set Fluorospheres (Flow-Set 675 Fluorospheres, Flow-Set 770 Fluorospheres). Ascertain target mean position based upon application and adjust high voltage and gain daily to that target. Export results to the QC Database and review the QC data.
Monitor instrument linearity	Immuno-Brite Fluorospheres.
Perform absolute counts	Flow-Count Fluorospheres.
Adjust color compensation for a given application	For AutoSetup applications, Cyto-Comp Cells or whole blood stained with QuickCOMP 2 or QuickCOMP 4 kit. Use single color stained samples with each fluorochrome used in your application. For example: CD45-FITC, CD45-PE, CD45-ECD, CD45-PC5 or CD45-PC7.
Verify correct settings with an application Control	Update the control protocol with the settings derived from above. Run a biological control equivalent to the application, such as Immuno-Trol Cells, Immuno-Trol Low Cells, Cyto-trol Control Cells, Stem-Trol Control Cells, or a normal whole blood. Export results to the QC Database and review the QC data.

3.4 DAILY QC

Daily QC consists of:

- Preparing AutoSetup Samples
- Running the AutoSetup Scheduler
- Running the AutoSetup II Wizard

IMPORTANT Risk of erroneous results if the Cytometer has been idle for an extended period of time or you have just performed Daily Startup. To ensure correct results, perform a prime after:

- Daily Startup.
- The Cytometer has been idle for an extended period of time.
- You place a new carousel on the MCL and light scatter signals appear abnormal.

Preparing AutoSetup Samples

1 Prepare the appropriate Flow-Check fluorospheres for the applications you need to run. The fluorospheres you use to perform alignment verification depend upon which application you are using, as shown in the chart below. Follow the package insert instructions for mixing and handling fluorospheres.

Application	Flow-Check	Flow-Check 770	Flow-Check 675
FS-SS-FITC-PE-ECD-PC5	✓		
FS-SS-FITC-PE-ECD-PC5-PC7	✓	✓	
FS-SS-FITC-PE-ECD-APC	✓		✓
FS-SS-FITC-PE-ECD-APC-PC7	✓	✓	✓

2 Prepare the appropriate Flow-Set fluorospheres for the applications you need to run. The Flow-Set fluorospheres tube is used to set the detector gains and voltages to the required level. The fluorospheres you use to perform standardization depend upon which application you are using, as shown in the chart below. Follow the package insert instructions for mixing and handling these fluorospheres.

Application	Flow-Set	Flow-Set 770	Flow-Set 675
FS-SS-FITC-PE-ECD-PC5	✓		
FS-SS-FITC-PE-ECD-PC5-PC7	✓	✓	
FS-SS-FITC-PE-ECD-APC	✓		✓
FS-SS-FITC-PE-ECD-APC-PC7	✓	✓	✓

3 Prepare AutoSetup compensation tubes for each fluorochrome in the application you need to run.

Stain with appropriate single color reagents, such as CD45, in each fluorochrome.



4 Prepare an AutoSetup verification tube.

a. Use the appropriate amount of Immuno-Trol Cells or Immuno-Trol Low Cells according to the instructions on the package insert or reconstitute the Cyto-trol Control Cells according to the instructions on the package insert.

b. Stain the cells with the monoclonal antibodies you use for the protocol or panel.

5 Run the AutoSetup Scheduler.

3.5 AUTOSETUP SCHEDULER

Use the AutoSetup Scheduler to select the applications that you need to run on the instrument in a given day or "shift". AutoSetup Scheduler groups the selected applications and provides the carousel load report to facilitate setting up and loading samples for daily QC.

---

1 **Tools ▸▸ AutoSetup Scheduler.**

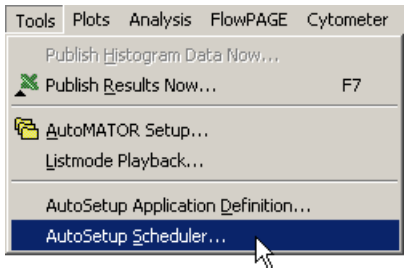

---

2 the applications you want to schedule for a given day or shift.

If you want to schedule an application that does not appear in the list, use the Application Definition Wizard to define the application.

Note: Using the descriptor QC in front of any protocol name appends the results of multiple Flow-Check runs to a single spreadsheet. See Workspace Preferences - Acquisition Options to automatically export data to MS Excel for Quality Control monitoring or basic spreadsheet data entry.

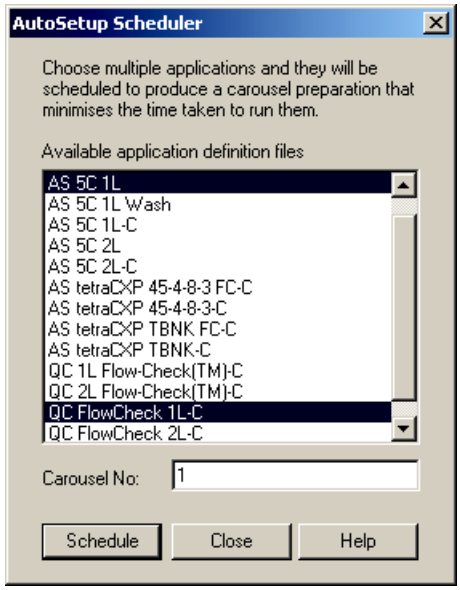

---

3 Enter the Carousel number and Schedule.

PN 624923BF

4 Print to print the Carousel Load Report.

Note: If absolute counts are required, Close and use the Acquisition Manager to enter the CAL Factor.

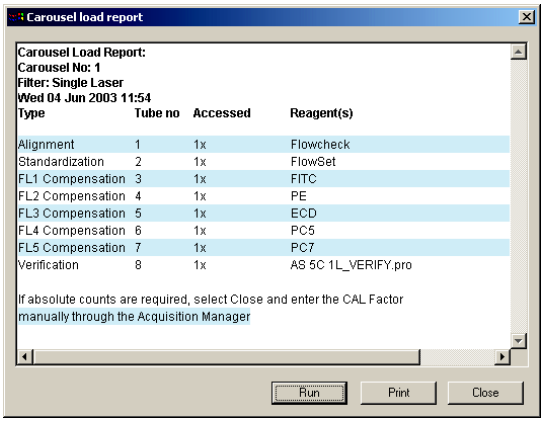

5 Place tubes in the carousel in the order shown on the Carousel Load Report.

Run on the Carousel Load Report screen to run AutoSetup II.

3.6 AUTOSETUP II WIZARD

AutoSetup II simplifies and automates application setup and QC monitoring for multiple applications simultaneously. You can perform a QC setup for all of your multicolor applications that you run during a single day or shift at the same time for common instrument optical configurations using the Application Definition Wizard and the AutoSetup Scheduler.

IMPORTANT Risk of erroneous results if the Cytometer has been idle for an extended period of time or you have just performed Daily Startup. To ensure correct results, perform a prime after:

- Daily Startup.
- The Cytometer has been idle for an extended period of time.
- You place a new carousel on the MCL and light scatter signals appear abnormal.

Before Running the AutoSetup II Wizard

- Check that the DAILY STARTUP procedure was performed.
- Allow about 40 minutes to warm up the system.
- Check the Cytometer status message. Start this procedure when the Cytometer status message *Awaiting Sample* appears. Record any error messages in your instrument's logbook.
- Set up Workspace Preferences - Acquisition Options to print results.
- Set up Workspace Preferences - LMD File Name to specify listmode file names.
- Follow the directions in the Flow-Check Fluorospheres package insert for proper handling of the Flow-Check fluorospheres.
- Establish Flow-Set fluorospheres target channels for your laboratory and modify the default application definitions if necessary. Follow the directions in the Flow-Set fluorospheres package insert.
- Set up the QC Products that you need to use with AutoSetup applications.
- Set up region statistics exporting and assign QC products to regions.
- If acquisition ends as a result of duration (not stop count) while running AutoSetup II, select  on the Cytometer Control toolbar to continue.
- Before using a negative control sample with AutoSetup, you must Modify A Standardization Protocol for use in the AutoSetup panel. See Using Negative Controls with AutoSetup in the Reference Manual.

1 Run on the Carousel Load Report screen in the AutoSetup Scheduler.

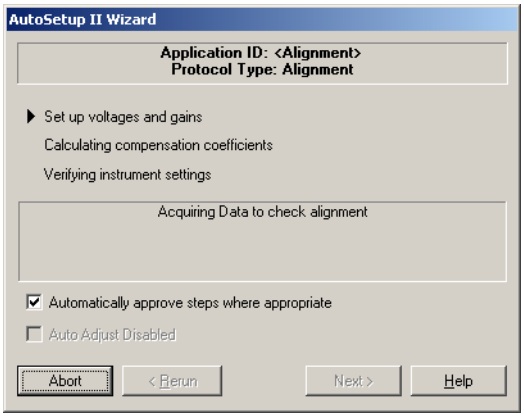

2 ALIGNMENT APPLICATIONS

After data acquisition for the Alignment Application starts, view all histograms to ensure peaks fall within regions.

a. Setup Mode on the Cytometer Control Acquisition Setup Tab.

b. Adjust voltages to place peaks within regions

c. Uncheck Setup Mode.

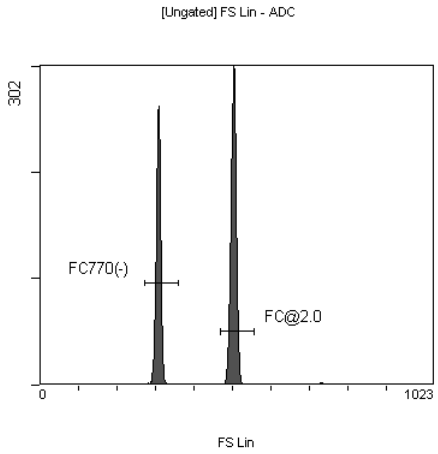

3 When acquisition of the Alignment stops, check the HPCV status displayed on the AutoSetup II Wizard dialog.

- If HPCVs pass:

  1)  Finish on the AutoSetup II Wizard.

  or

  2)  Next > to continue with another scheduled QC application.

- If QC Failed is displayed, one or more HPCVs are not within the upper limits identified in the protocol's region name.

  1) Perform one or more of the following troubleshooting steps:

     Note: Refer to online Help if detailed instructions are needed.

     - Ensure the Flow Rate is LOW.
     - Prime the system.
     - Vent air bubbles (from the sheath tank/sheath filter).
     - Run a Cleanse Cycle.
     - Run a Cleaning Panel.

  2)  < Rerun.

4 STANDARDIZATION APPLICATONS

When the _STAND protocol's data acquisition starts, view all histograms to ensure peaks fall within the targeted regions.

Note: When running a negative control verify that the AutoGate is around the population of interest in the FS vs SS dotplot. If you need to, adjust populations.

a.  **Auto Adjust Disabled** as soon as the AutoSetup wizard displays.

b. adjust voltages to place the lymphocytes in a suitable position.

c. adjust voltages to place the fluorescence populations within the first log decade.

d.  Acquire.

The Wizard adjusts Volts and Gains to place the Flow-Set fluorospheres within the regions. The Wizard dialog box displays a list of the parameters remaining to be adjusted. If the Wizard cannot adjust peaks to the regions within 60 seconds, AutoSetup aborts and the parameters that failed are listed.

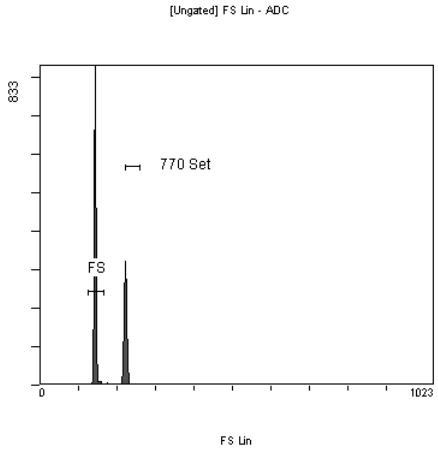

The compensation tubes are used to calculate the compensation coefficients required, all these tubes are run in the same way.

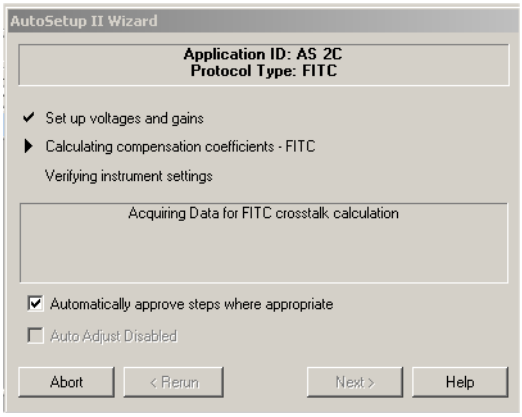

This process is repeated for each of the compensation tubes (for example: FL2, FL3, FL4, and FL5).

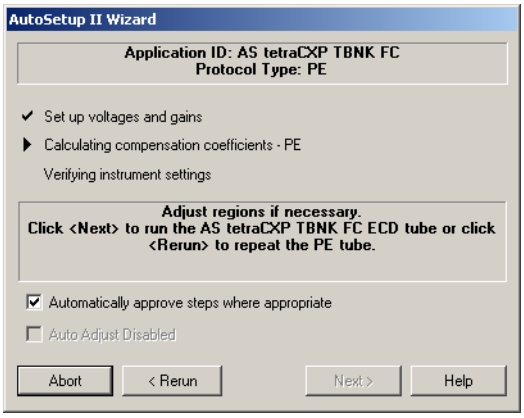

Verification samples are run to ensure the calculated coefficients are satisfactory for the samples and antibodies being used in your tests. The QuickCOMP slider bars are automatically enabled and the AutoSETUP Wizard is displaying *Adjust Compensation setting if necessary then click <Acquire> to continue*. Manual compensation adjustments are allowed, if desired. Compensation settings cannot be adjusted in Locked Protocols.

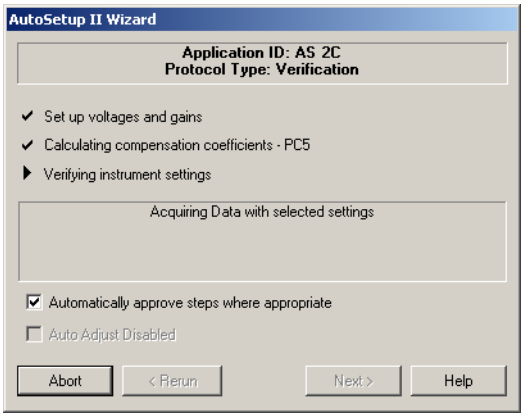

Note: If multiple applications are scheduled together, samples common to the applications are processed in tandem without dropping the tube. The protocol is displayed during processing.

Note: When running AutoSetup with verification protocol(s) that contain Locked Protocols, do not select **Rerun**. (**Rerun** is only available when the **Automatically approve steps where appropriate** option is not selected.)

5 Finish to print verification tube results and advance to the approve screen.

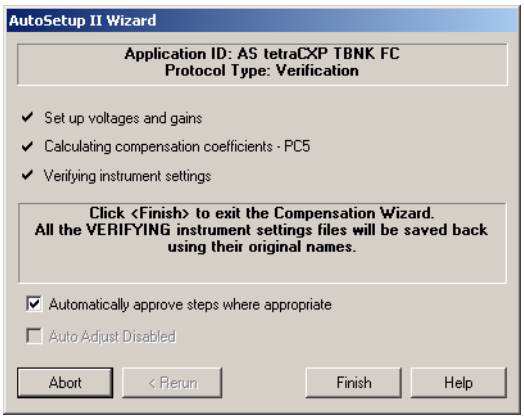

6 Check the printed verification tube results to ensure instrument settings are correct and  Approve.

Note: Due to differences between individual instruments, settings files should not be transferred from one instrument to another. If you attempt to use settings files from another instrument, the software displays *Incorrect Cytometer Serial Number.*

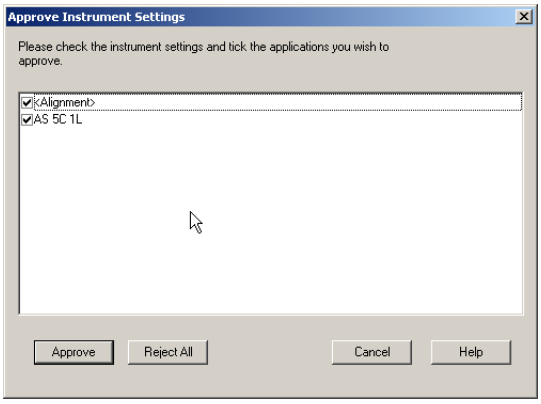

7 Review QC Results in the QC Database.

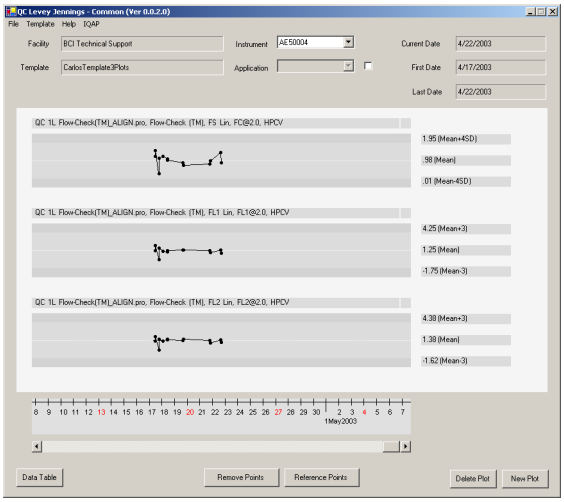

3.7 APPLICATION DEFINITION WIZARD

Use the Application Definition Wizard to define your applications and save the definitions for use by the AutoSetup Scheduler. The application definition captures the instrument setup, lasers, parameters, fluorochromes, target channels, verification and alignment requirements of a particular application.

Before Running the Application Definition Wizard

- Establish Flow-Set fluorospheres target channels for your laboratory. Follow the directions in the Flow-Set fluorospheres package insert.
- Ensure that the base protocol you use to define an application contains only the parameters that you use in the application. If it contains extra unused parameters, the compensation matrix will be incorrect.

ATTENTION: If a base protocol with Side Scatter/Forward Scatter Log Scale is used to create a new protocol using the Application Definition Wizard, the protocol is created using a Side Scatter/Forward Scatter Linear Scale.

---

1 **Tools ▸▸ AutoSetup Application Definition.**

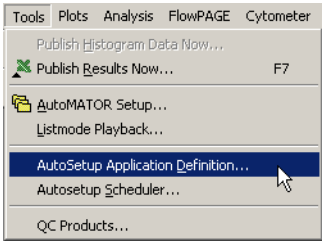

---

2 one of the following options:

Application available only to current user
Application available to all users (common).

---

3 one of the following options:

Create a new application definition
Modify an application definition

and then Next >.

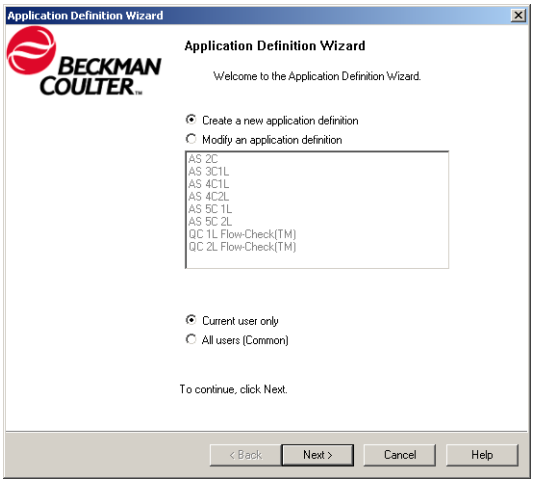

4 Browse... and select the protocol to use as the base protocol for the application.

The Protocol Summary displays a description of the parameters and laser setup for the selected protocol.

Next >.

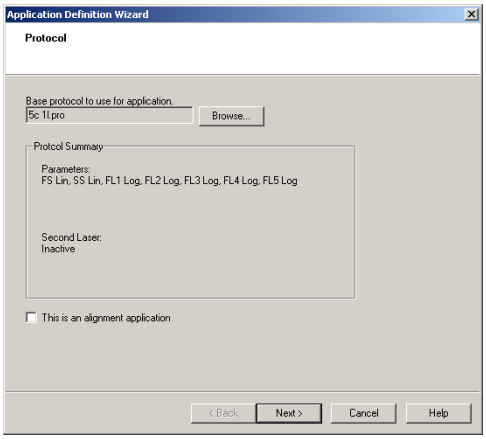

5 the filter block to use for the application and Next >.

Note: An alignment application may not have a User defined Filter Block selected. Alignment applications must have either a 1-Laser Filter Block or 2-Laser Filter Block selected.

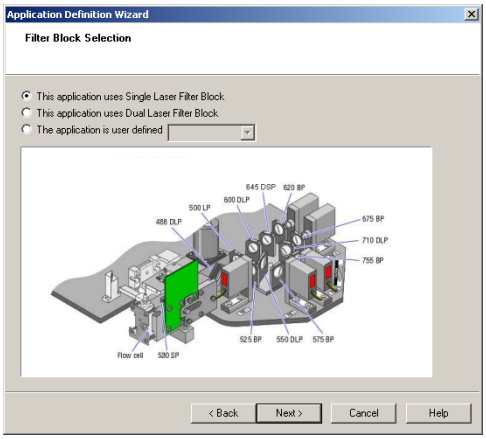

6 the forward scatter collection angle to use for the application and Next >.

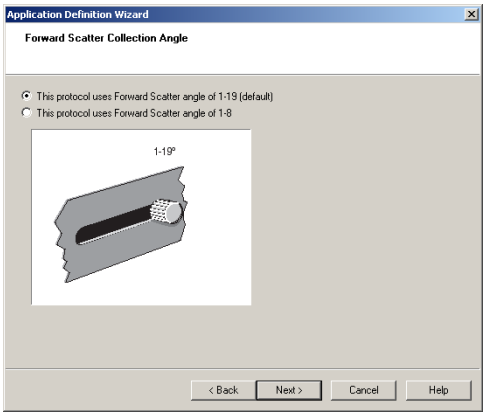

7 the dyes you use for each fluorescence detector and Next >.

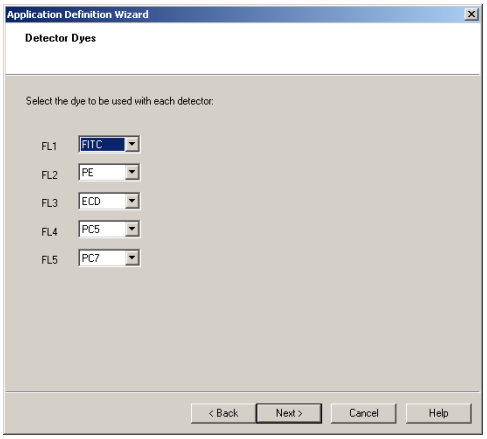

8 Select a QC product and enter a target channel for Forward Scatter, Side Scatter and each fluorescence detector.

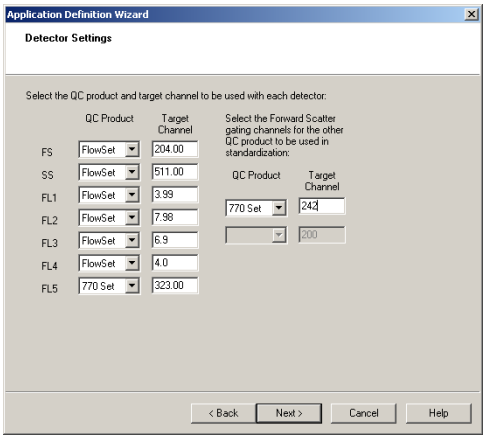

Note: If you are running a 5 color 2 laser application, enter Fluorescence and Forward Scatter target channels for the Flow-Set 675 and Flow-Set 770 Fluorospheres.

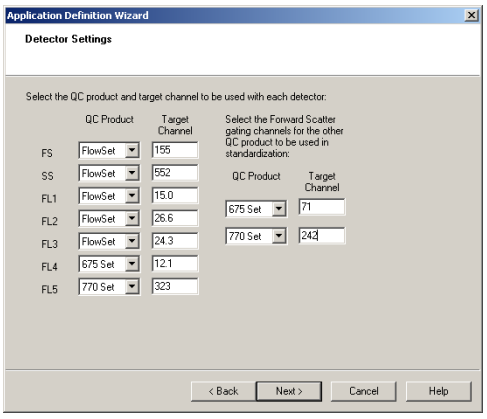

9 Enter names for the application and the instrument settings file and

Next >.

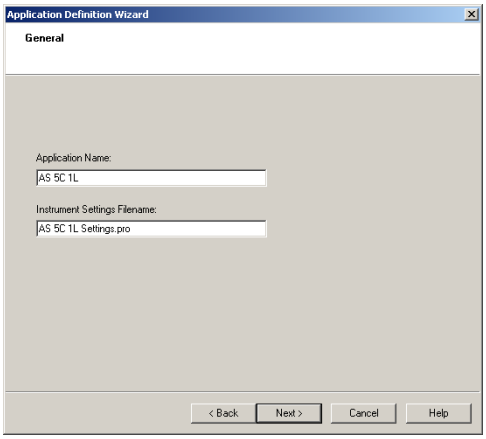

10 Choose to have the wizard create a verification protocol or add a saved verification protocol or panel. Use the buttons to add, remove and reorder multiple verification protocols.

Next >.

Note: Any panels used for Quality Control must be constructed with unique individual protocols.

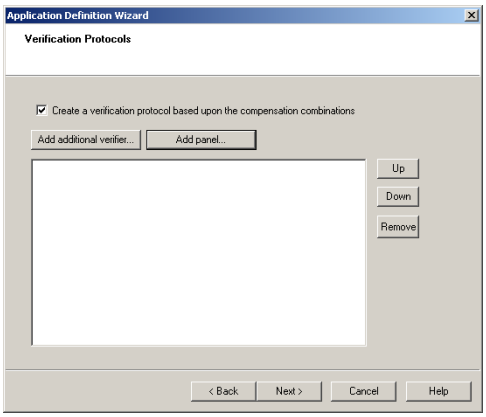

11 A summary report is displayed for the application you just defined. The application definition is available for use with the AutoSetup Scheduler.

Next > to print the summary report and Finish to exit the wizard.

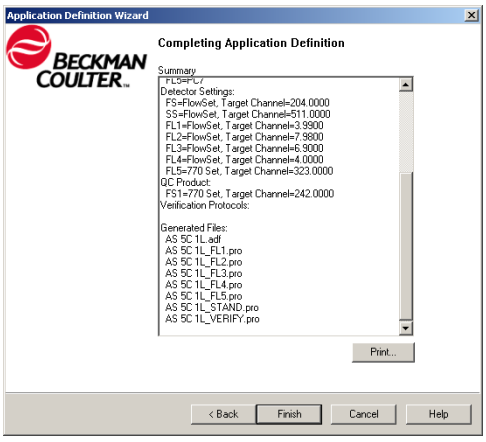

Setting Up QC Products

1 

to display the Report Generator toolbar.

2  on the Report Generator toolbar to display the Edit Products screen.

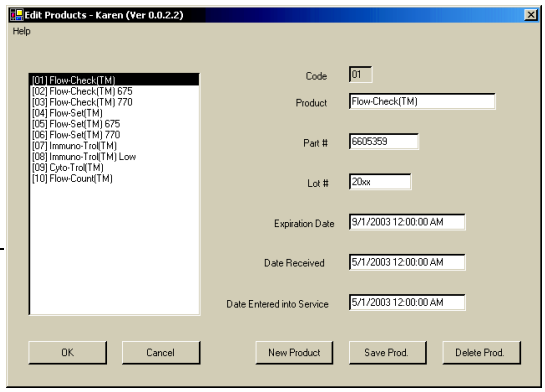

3 Create or update a QC product:

- 

to create a new QC product.

Or

- Select a product from the QC Product list to modify an existing product.

4 Refer to the package insert and enter, or change, the information about the QC Product in the appropriate fields.

5 To save a new QC product:

a. Save Prod. to save the new QC product information.

b. Yes when prompted to confirm the creation of the new QC product.

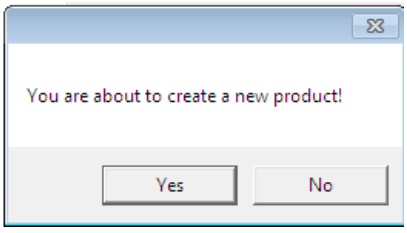

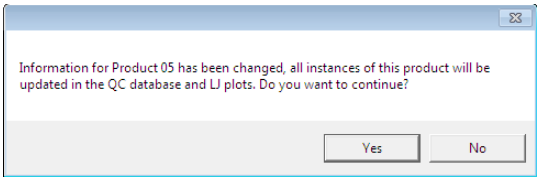

c. Save Prod. again.

d. Yes when prompted to confirm changes.

Or

To save changes to an existing product:

a. Save Prod. to save the updates to the QC product information.

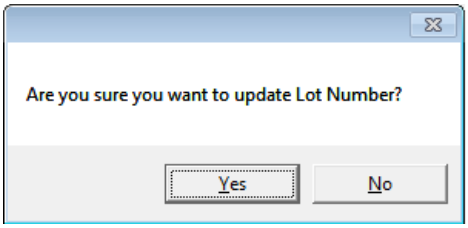

b. Yes when prompted to confirm the updates to the Lot Number.

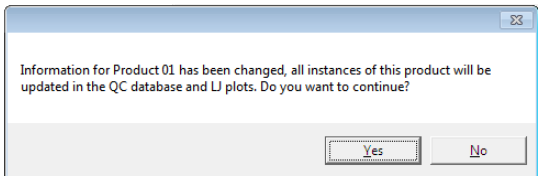

c. Save Prod. again.

d. Yes when prompted to confirm changes.

6 OK

Exporting Region Results To QC Database and Assigning QC Products

1 on a region to make it active.

2 Right mouse click on the region and **Region Properties**.



3 Ensure that ☑ **Region Statistics exported for Quality Control**.

4 next to **QC Product** and select the QC Product to assign to the region.

5 OK and save the protocol.

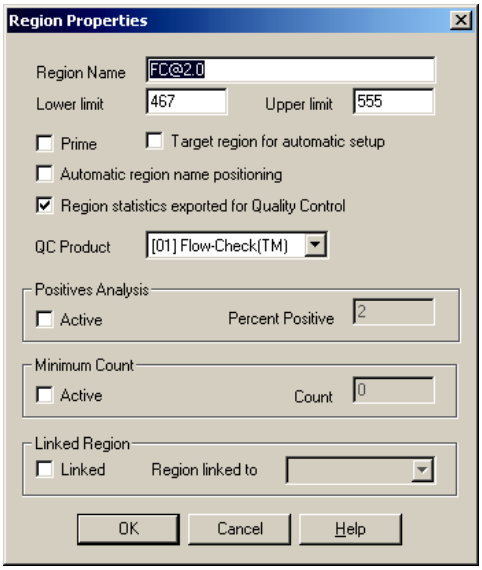

Review QC Results

1 Report Generator Karen... to display the Report Generator toolbar.

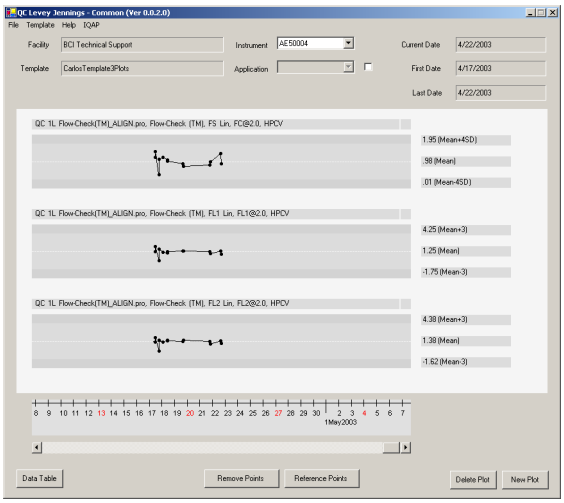

2 on the Report Generator toolbar to display the QC Levey Jennings screen.

3 next to **Application** and to select an application.

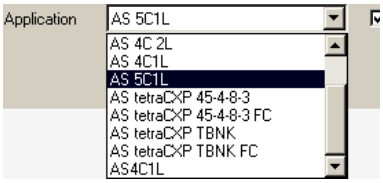

4 **Template ▸▸ Open Template.**

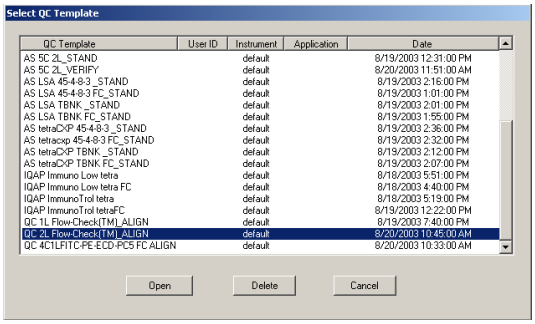

5 the desired template and Open.

6 Repeat steps 3 - 5 to view other QC data plots.

See QC Levey Jennings Screen in the Reference manual for information about creating and editing QC plots.

4.1 SAMPLE REQUIREMENTS

At least 0.5 mL of prepared sample is needed. It must be in a 12- x 75-mm test tube. Samples analyzed on the instrument must be in a single-cell suspension. Typically, cells are prepared before they are analyzed. The method used to prepare a specimen depends on the sample type and the assay desired. For example, a TQ-Prep workstation combined with a PrepPlus or PrepPlus 2 lets you prepare antibody-labeled cells from an anticoagulated whole-blood specimen for surface marker analysis.

In general, the optimum concentration for analysis is 5×10^6 cells/mL. When this concentration is not possible, refer to the package insert for the preparation method you are using.

The instrument can measure cells that are between 0.5 µm and 40 µm in diameter.

4.2 BEFORE RUNNING SAMPLES

1 Check that the DAILY STARTUP procedures were done.

2 Check that the DAILY QC procedures were done.

3 Ensure Acquisition Options and LMD file name are set up in Workspace Preferences.

4 Ensure there is sufficient space on your hard drive for sample processing and data acquisition.

5 Read the Important Information on the Support tab in the Resource Explorer.

IMPORTANT Risk of erroneous results if the Cytometer has been idle for an extended period of time or you have just performed Daily Startup. To ensure correct results, perform a prime after:

- Daily Startup.
- The Cytometer has been idle for an extended period of time.
- You place a new carousel on the MCL and light scatter signals appear abnormal

IMPORTANT Risk of sample misidentification if a power failure occurs during sample processing. In the event of a power failure, discard any in-process samples.

IMPORTANT Risk of erroneous results if you modify a protocol containing data by making changes to cytosettings, regions, or gates. Whenever a protocol containing data is modified by making changes to cytosettings, regions, or gates, refresh data before reporting results. Perform this refresh using any of the following actions, as applicable.

In Acquisition mode,

- Make all changes while in Setup Mode.

  or

- Select  if acquiring (and not in Setup Mode).

In Analysis mode,

- Edit a gate (size, shape, or position).

  or

- Select  and OK.

  or

- Select  and OK.

Review all data plots and results before reporting. Any uncharacteristic patterns in the data or unexpected results must be verified by running Quality Control and, if necessary, preparing new samples.

Note: Acquisition counters do not update when any menu or dialog (except the Cytometer Controls dialog) is opened while acquiring. Although acquisition continues until the specified stop criteria are met, the system will not acquire data from the next sample until the menu or dialog is closed.

4.3 RUNNING SAMPLES - MCL AUTOMATIC MODE

SHOW ME an example of MCL Automatic Mode sample processing.

Verifying A Worklist

Always verify carousel and tube location fields before starting acquisition and ensure that the Acquisition Manager information accurately reflects the tubes in the carousel being run. The order of the tubes in the carousel must match the order of the tubes in the Worklist.

The default protocol (Ctrl N) must be saved prior to being used in the Worklist. If the default protocol is not saved with a specific name prior to using it, that tube may be run with unexpected protocol settings depending on the Save Protocol selection in Workspace Preferences. Also, the default protocol name will default to "setup.def" in any associated panel template and have no regions.

CAUTION Possible flow cell damage. To avoid clogging the sample probe, sample tubing or flow cell, ensure that 12-mm x 75-mm test tubes are free of debris before you use them.

---

1 Prepare samples according to the reagent package insert.

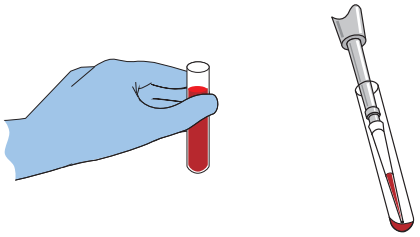

---

2 Place the sample tubes in a carousel.

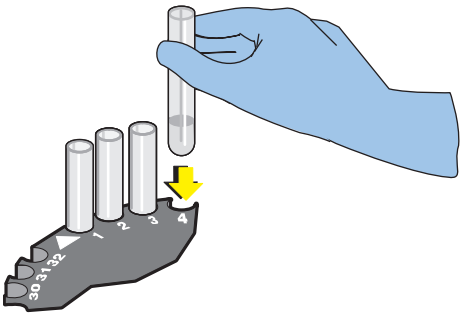

WARNING Risk of injury. Do not open the MCL cover while the MCL is moving. To avoid injury, wait until the MCL stops moving before opening the MCL cover.

3 Open the MCL cover and place the carousel on the MCL.

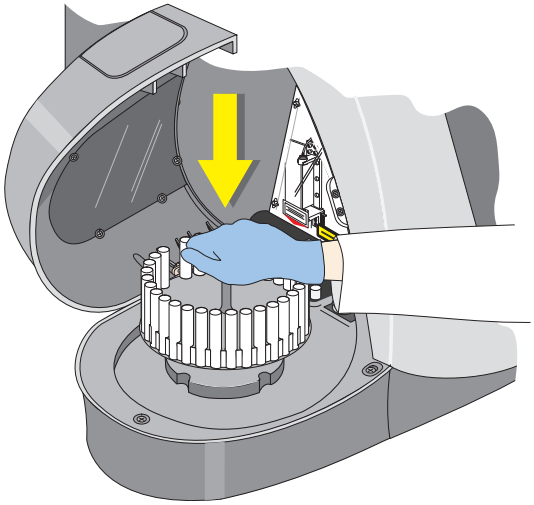

4 Close the MCL cover.

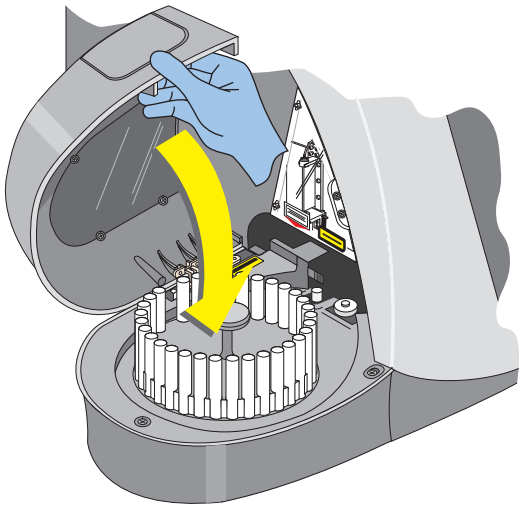

5 Use the Acquisition Manager Toolbar or Drag And Drop to select the Worklist, Panel or Protocol you want to use.

Note: If you load a Panel that contains a deleted Protocol, the software prompts you to use the New Panel Wizard to correct the problem.



6 Enter the carousel ID number in the Acquisition Manager.

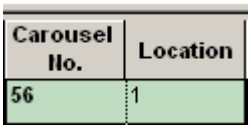

IMPORTANT Risk of erroneous results if the sample becomes diluted. When operating the Cytometer, if the MCL cover is opened, an audible alarm sounds and a warning message is displayed. If acquisition completes while the MCL cover is opened, do not use the sample for subsequent processing. Under this condition, the current sample may be diluted at the end of acquisition.

7  to begin processing samples.

During the sample cycle the following series of Cytometer status messages appears:

Awaiting Sample

Preparing Sample

Acquiring

Stopping.

8 Observe the Events/Sec counter on the Status Bar to monitor data acquisition.

Note: While running a Worklist and using bar codes on your sample tubes, if the Tube ID in the Worklist does not match the bar code on the tube, a system message appears. After you acknowledge the message, the mismatched tube is aborted and the processing stops for the rest of the carousel.

9 Verify all sample IDs before reporting results.

IMPORTANT Risk of reporting incorrect results. Data displays for light scatter patterns, antibody staining profiles, and all gates and boundaries used to arrive at the test result should be reviewed by a laboratory professional when interpreting the data.

10 Print Patient Panel Report, if needed. See Panel Report in the Reference manual.

4.4 RUNNING SAMPLES - MCL MANUAL MODE

MCL Manual Mode operates the same as MCL Automatic Mode except the MCL stops after processing each tube to allow you to edit the Sample ID.

CAUTION Possible flow cell damage. To avoid clogging the sample probe, sample tubing or flow cell, ensure that 12-mm x 75-mm test tubes are free of debris before you use them.

1 Prepare samples according to the reagent package insert.

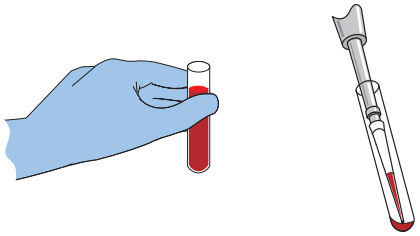

2 Place the sample tubes in a carousel.

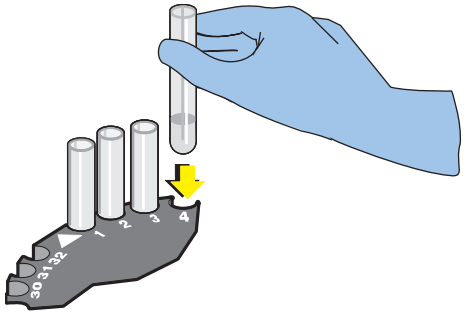

WARNING Risk of injury. Do not open the MCL cover while the MCL is moving. To avoid injury, wait until the MCL stops moving before opening the MCL cover.

3 Open the MCL cover and place the carousel on the MCL.

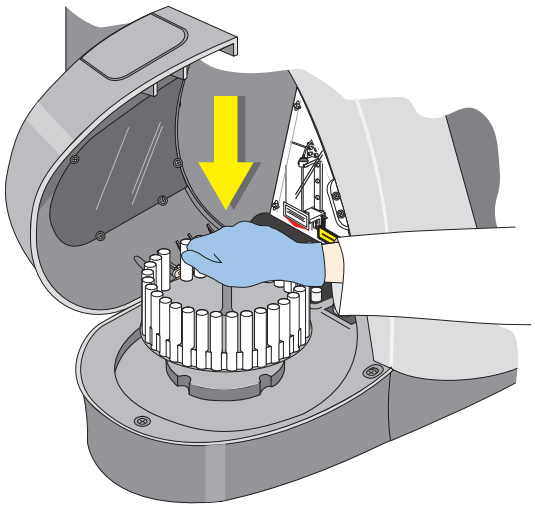

4 Close the MCL cover.

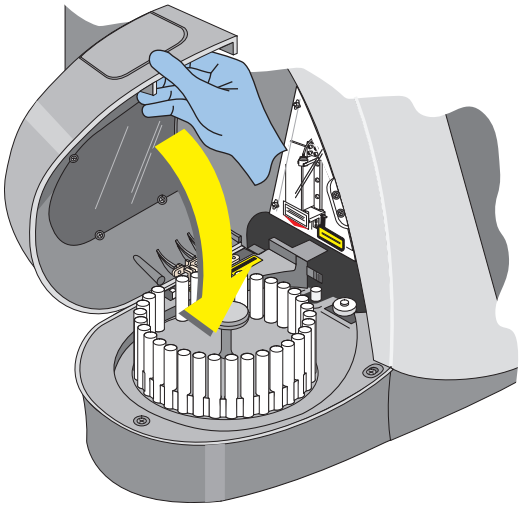

5 To stop after processing each tube and edit the Sample ID,



 **Edit Sample IDs** on Workspace Preferences - Acquisition Options.

6 Use the Acquisition Manager Toolbar or Drag And Drop to select the Worklist, Panel or Protocol you want to use.



Note: If you load a Panel that contains a deleted Protocol, the software prompts you to use the New Panel Wizard to correct the problem.

7 Enter the carousel ID number in the Acquisition Manager.

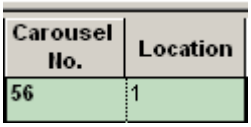

Carousel No.	Location
56	1

8  to place the Cytometer in MCL Manual Mode.

IMPORTANT Risk of erroneous results if the sample becomes diluted. When operating the Cytometer, if the MCL cover is opened, an audible alarm sounds and a warning message is displayed. If acquisition completes while the MCL cover is opened, do not use the sample for subsequent processing. Under this condition, the current sample may be diluted at the end of acquisition.

9  to begin processing samples.

10 Enter the tube location to process and .

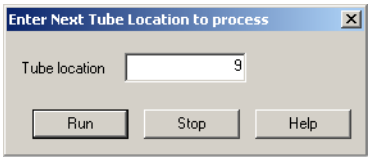

During the sample cycle the following series of Cytometer status messages appears:

Awaiting Sample

Preparing Sample

Acquiring

Stopping.

11 Observe the Events/Sec counter on the Status Bar to monitor data acquisition.

Note: While running a Worklist, if the Tube ID in the Worklist does not match the bar code on the tube, a system message appears. After you acknowledge the message, the mismatched tube is aborted and the processing stops for the rest of the carousel.

12 If you enabled **Edit Sample IDs** on Workspace Preferences - Acquisition Options, edit the sample ID after the tube finishes processing and 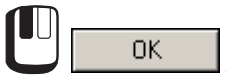.

Note: After the first tube in a panel, Sample ID 1 cannot be changed.

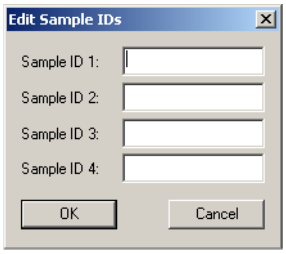

13 Enter the location of the next tube to process and .

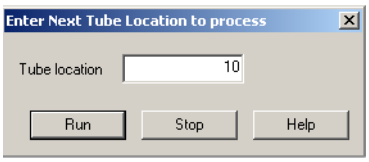

14 Repeat steps 12 and 13 to process additional tubes.

15 Verify all sample IDs before reporting results.

IMPORTANT Risk of reporting incorrect results. Data displays for light scatter patterns, antibody staining profiles, and all gates and boundaries used to arrive at the test result should be reviewed by a laboratory professional when interpreting the data.

16 Print Patient Panel Report, if needed. See Panel Report in the Reference manual.

4.5 RUNNING SAMPLES - SINGLE TUBE MODE

The Single Tube Mode operates by introducing tubes individually into the MCL through the MCL Tube Access door. ***SHOW ME*** an example of Single Tube Mode sample processing.

Note: When operating in the Single Tube Mode, the Prime function is not available when the system is between samples, even though the toolbar is active.

CAUTION Possible flow cell damage. To avoid clogging the sample probe, sample tubing or flow cell, ensure that 12-mm x 75-mm test tubes are free of debris before you use them.

---

1 Prepare samples according to the reagent package insert.

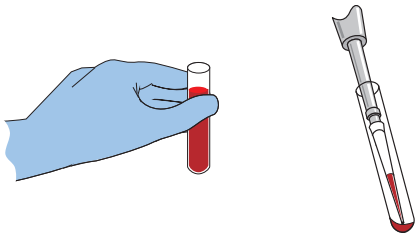

---

2 If you want the MCL to stop after processing each tube to allow you to edit the Sample ID,   **Edit Sample IDs** on Workspace Preferences - Acquisition Options.



---

3 Use the Acquisition Manager Toolbar or Drag And Drop to select the Worklist, Panel or Protocol you want to use.

Note: If you load a Panel that contains a deleted Protocol, the software prompts you to use the New Panel Wizard to correct the problem.



4  to place the Cytometer in Single Tube Mode. The MCL moves to put carousel position 10 under the Tube Access door.

WARNING Risk of injury. Do not open the MCL cover while the MCL is moving. To avoid injury, wait until the MCL stops moving before opening the MCL cover.

5 Open the MCL Tube Access door and place the sample tube in carousel position 10.

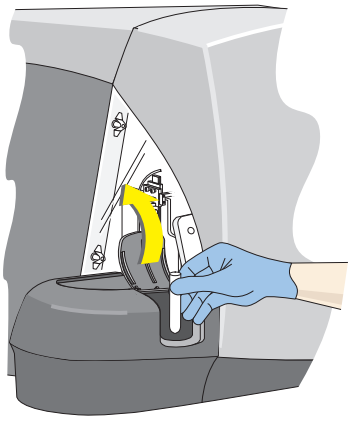

IMPORTANT Risk of erroneous results if the sample becomes diluted. When operating the Cytometer, if the MCL cover is opened, an audible alarm sounds and a warning message is displayed. If acquisition completes while the MCL cover is opened, do not use the sample for subsequent processing. Under this condition, the current sample may be diluted at the end of acquisition.

6 Close the MCL Tube Access door and  to begin processing samples.

During the sample cycle the following series of Cytometer status messages appears:

Awaiting Sample

Preparing Sample

Acquiring

Stopping.

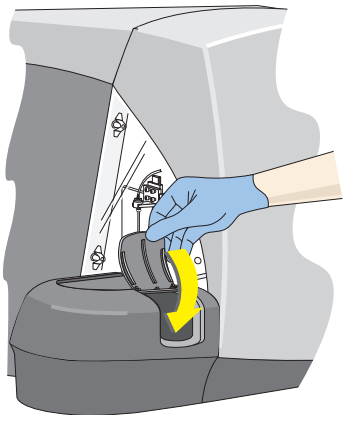

7 Observe the Events/Sec counter on the Status Bar to monitor data acquisition.

Note: While running a Worklist, if the Tube ID in the Worklist does not match the bar code on the tube, a system message appears. After you acknowledge the message, the mismatched tube is aborted and the processing stops for the rest of the carousel.

8 Verify all sample IDs before reporting results.

IMPORTANT Risk of reporting incorrect results. Data displays for light scatter patterns, antibody staining profiles, and all gates and boundaries used to arrive at the test result should be reviewed by a laboratory professional when interpreting the data.

9 If you enabled **Edit Sample IDs** on Workspace Preferences - Acquisition Options, edit the sample ID and



.

Note: After the first tube in a panel, Sample ID 1 cannot be changed.

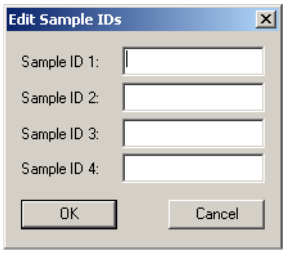

10 Repeat steps 5 through 9 to process additional tubes.



to exit Single Tube Mode and return to Automatic Mode.

11 Print Patient Panel Report, if needed. See Panel Report in the Reference manual.

4.6 DATA REVIEW

IMPORTANT Risk of reporting incorrect results. Data displays used to arrive at the test result for light scatter patterns, antibody staining profiles, as well as all gates and boundaries should be reviewed by a laboratory professional when interpreting the data. If results are suspect, follow your laboratory's procedures to resolve.

Data review should include the following:

- Review the light scatter patterns.
  - Verify any population of interest is above the discriminator to ensure no cell loss.
  - Verify any population of interest is separated as much as possible from other populations that are present (within biological constraints).
- Review the antibody staining patterns.
  - Verify overall expected staining patterns are observed; in other words, verify the fluorescence staining correlates to the antibody used in sample preparation.
  - Verify abnormally dim or negative sample staining patterns are in agreement with clinical presentation and other diagnostic data.
- Review Gate and Region boundaries.
  - Verify gates and regions encompass any population of interest while at the same time exclude undesired events.

5.1 WHAT THIS CHAPTER EXPLAINS

This chapter explains how the Cytometer measures scattered light and fluorescence as cells pass through the laser beam.

The illustrations in this chapter are not exact representations of the inside of the Cytometer. They are for explanatory purposes only.

5.2 SAMPLE FLOW

CAUTION Possible flow cell damage. To avoid clogging the sample probe, sample tubing or flow cell, ensure that 12-mm x 75-mm test tubes are free of debris before you use them.

Sample Loading

The sample carousel has bar code labels that identify the carousel and the tube position number. Also, you can put bar code labels on the sample tubes. See Appendix B, BAR CODE SPECIFICATIONS.

The MCL has a bar code reader that reads the carousel number, the sample tube position, and the sample tube bar code labels as the carousel rotates. The MCL handles a sample tube as follows:

- It lifts the tube out of the carousel into a centering cup.
- It moves the bottom of the tube in a circular orbit for 3 seconds to mix the sample.
- It lowers its sample probe into the tube and the tube is pressurized. Sample flow begins.

The sample probe is cleaned automatically when sample flow ends.

Hydrodynamic Focusing

If the cells were to move through the laser beam in different ways during sample flow, sample analysis could be distorted. The instrument uses a process called hydrodynamic focusing to ensure that the cells move through the laser beam one at a time, along the same path. Hydrodynamic focusing occurs in the flow cell.

The flow cell (Figure 5.1) contains a rectangular channel. A pressurized stream of sheath fluid enters the channel at the lower end and flows upward. The sensing area of the flow cell is at the center of the channel.

While the sheath stream is flowing through the channel, a stream of sample is injected into the middle of the sheath stream. As shown in Figure 5.1, the sheath stream surrounds, but does not mix with, the sample stream. The pressure of the sheath stream focuses the sample stream so that the cells flow through the laser beam single file.

Figure 5.1 Flow Cell (Hydrodynamic Focusing)

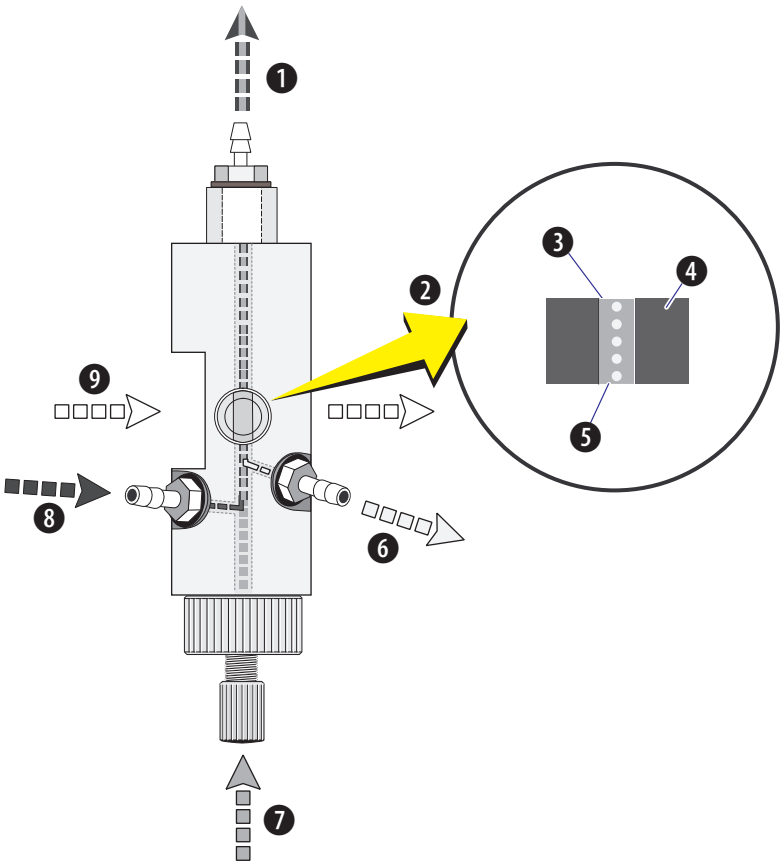

❶ To waste
❷ Sensing area has rectangular channel
❸ Sample stream
❹ Sheath stream
❺ Cells
❻ To waste
❼ Sample stream enters here
❽ Sheath stream enters here
❾ Direction of laser beam

5.3 LASER BEAM SHAPING

Before the laser beam reaches the sample stream, cross-cylindrical lenses focus the beam (see Figure 5.2). Focusing keeps the beam perpendicular to the sample stream flow while making the beam small enough to illuminate only one cell at a time.

The first lens controls the width of the beam; the second, the height. The resulting elliptical beam is focused on the sensing area of the flow cell.

Figure 5.2 Laser Beam Shaping

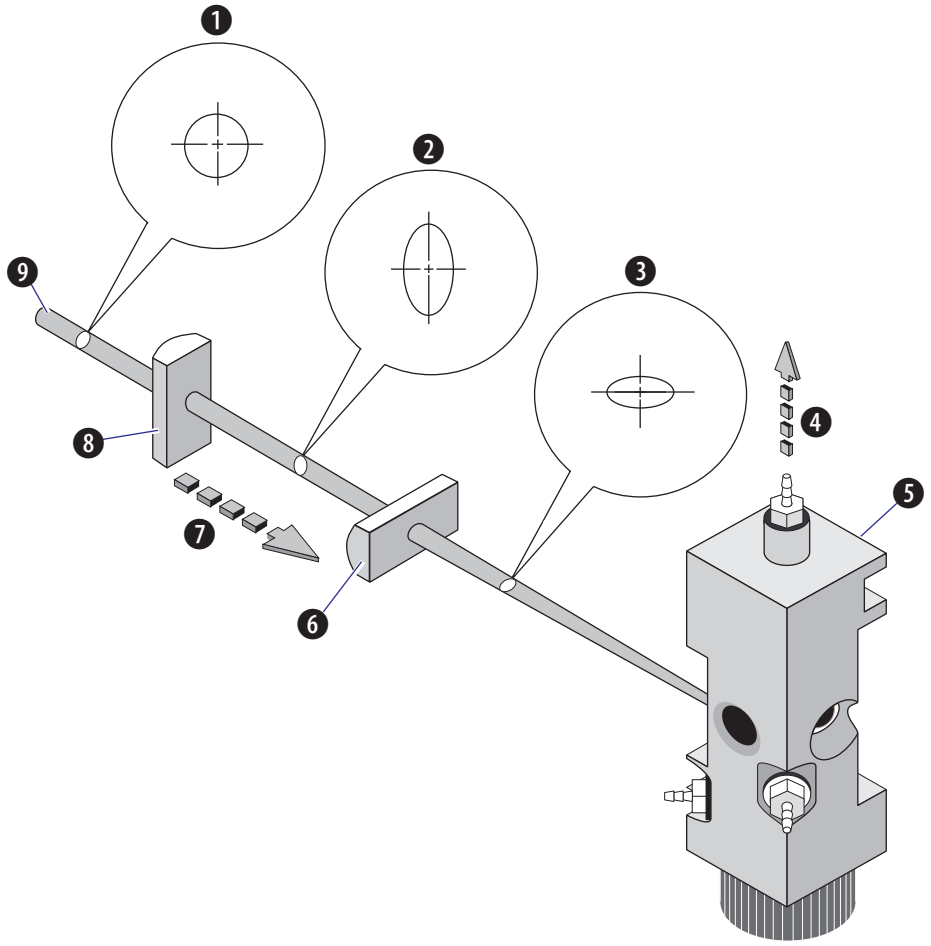

❶ Cross section before lenses
❷ Cross section before vertical lens
❸ Cross section before horizontal lens
❹ To waste
❺ Flow cell
❻ Vertical beam shaping lens
❼ Laser beam direction
❽ Horizontal beam shaping lens
❾ Laser beam

5.4 CELL ILLUMINATION

As cells in the sample stream go through the sensing area of the flow cell, the elliptical laser beam illuminates them. The cells scatter the laser light and emit fluorescent light from fluorescent dyes attached to them.

Forward Scatter

The amount of laser light scattered at narrow angles to the axis of the laser beam is called forward scatter (FS). The amount of FS is proportional to the size of the cell that scattered the laser light.

Side Scatter and Fluorescent Light

The amount of laser light scattered at about a 90° angle to the axis of the laser beam is called side scatter (SS). The amount of SS is proportional to the granularity of the cell that scattered the laser light. For example, SS is used to differentiate between lymphocytes, monocytes, and granulocytes.

In addition to the SS, the cells emit fluorescent light (FL) at all angles to the axis of the laser beam. The amount of FL enables the instrument to measure characteristics of the cells emitting that light, depending on the reagents used. For example, FL is used to identify molecules, such as cell surface antigens.

5.5 LIGHT COLLECTION, SEPARATION AND MEASUREMENT

IMPORTANT Risk of incorrect results. If the optical area cover is removed while running samples on the instrument. When the optical area cover is removed, the photomultiplier tubes (PMTs) go to a low voltage state which will decrease all signals if running a sample. Do not remove the optical area cover while running samples on the instrument.

Forward Scatter Collection

The FS sensor (see Figure 5.3 and Figure 5.4) collects the forward scatter—the laser light that is scattered at narrow angles to the axis of the laser beam. When light reaches the FS sensor, the sensor generates voltage pulse signals. These signals are proportional to the amount of light the sensor receives. As explained in Heading 5.6, SIGNAL PROCESSING, the signals are processed to measure the characteristics of the cells that scattered the light.

The FS sensor contains a Field Stop that allows you to collect different angles of Forward Scatter. The standard (factory set) position collects FS angles of 1 to 19°. The second position allows you to collect a lower angle of FS, 1 to 8°. See POSITION THE FIELD STOP.

Figure 5.3 Optical System with Optional Red Solid-State Laser

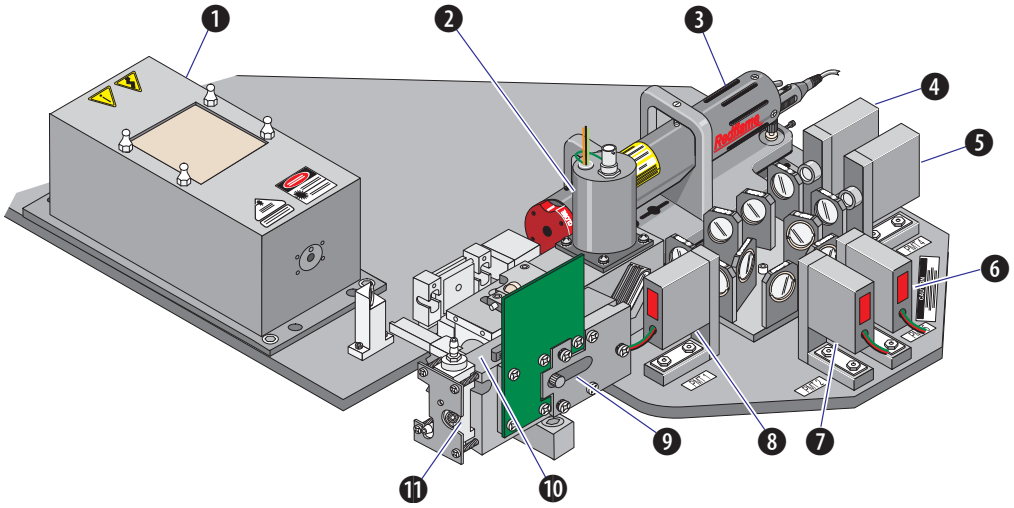

❶	Argon (488) laser	❺	FL4	❾	Field stop
❷	SS sensor	❻	FL5	❿	FS sensor
❸	Solid-state (635) laser (optional)	❼	FL2	⓫	Flow cell
❹	FL3	❽	FL1		

Figure 5.4 Optical System with Optional HeNe Laser

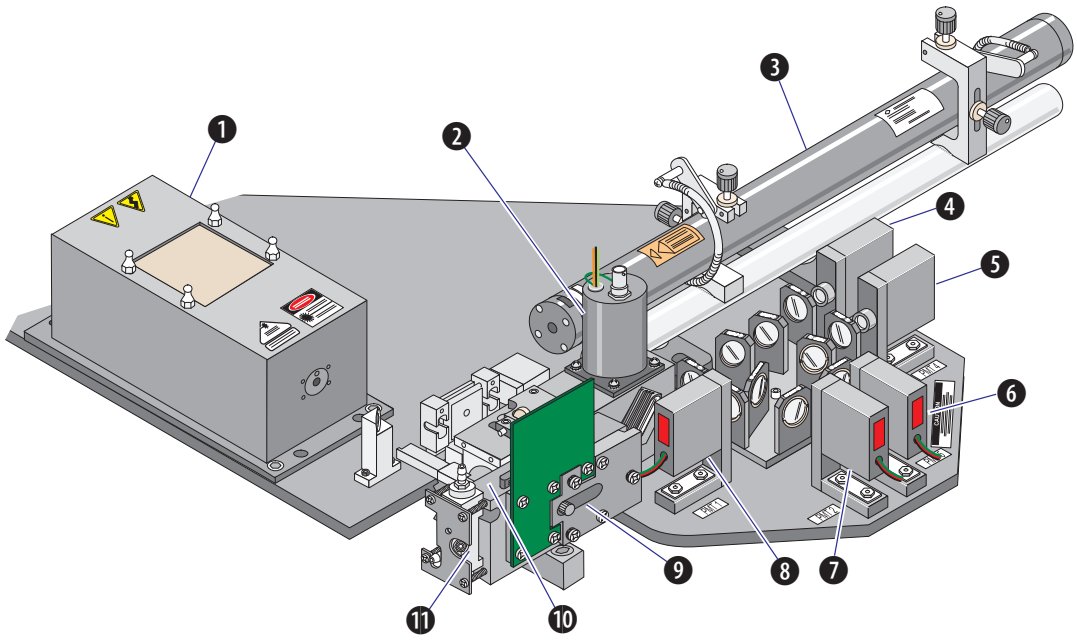

❶	Argon (488) laser	❺	FL4	❾	Field stop
❷	SS sensor	❻	FL5	❿	FS sensor
❸	HeNe (633) laser (optional)	❼	FL2	⓫	Flow cell
❹	FL3	❽	FL1		

Side Scatter and Fluorescent Light Collection

In order for the sensors to measure SS and FL, the light must be collected and the SS and fluorescent light must be separated.

The pickup lens/spatial filter assembly collects SS and FL from only the sensing area of the flow cell, and collimates it. This light then goes toward the SS sensor.

Side Scatter

The wavelength of SS is 488 nm. It is much more intense than FL. SS is the first light separated from the output of the pickup lens/spatial filter assembly.

SS is separated using a 488 nm dichroic long-pass (488 DL) filter at a 45-degree angle to the light path (see Figure 5.3, Figure 5.4, Figure 5.6, and Figure 5.5). The 488 DL filter reflects the SS to the SS sensor but transmits fluorescent light of longer wavelengths.

Figure 5.5 Single Laser Filter Block Configuration

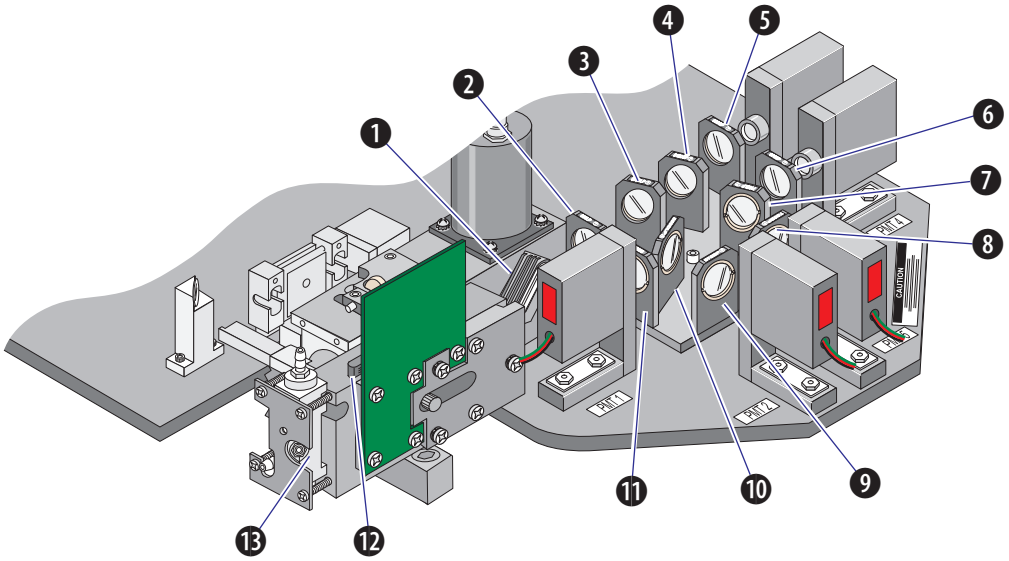

❶	488 DLP	❻	675 BP	⓫	525 BP
❷	500 LP	❼	710 DLP	⓬	530 SP
❸	600 DLP	❽	755 BP	⓭	Flow cell
❹	645 DSP	❾	575 BP		
❺	620 BP	❿	550 DLP		

Figure 5.6 Dual Laser Filter Block Configuration

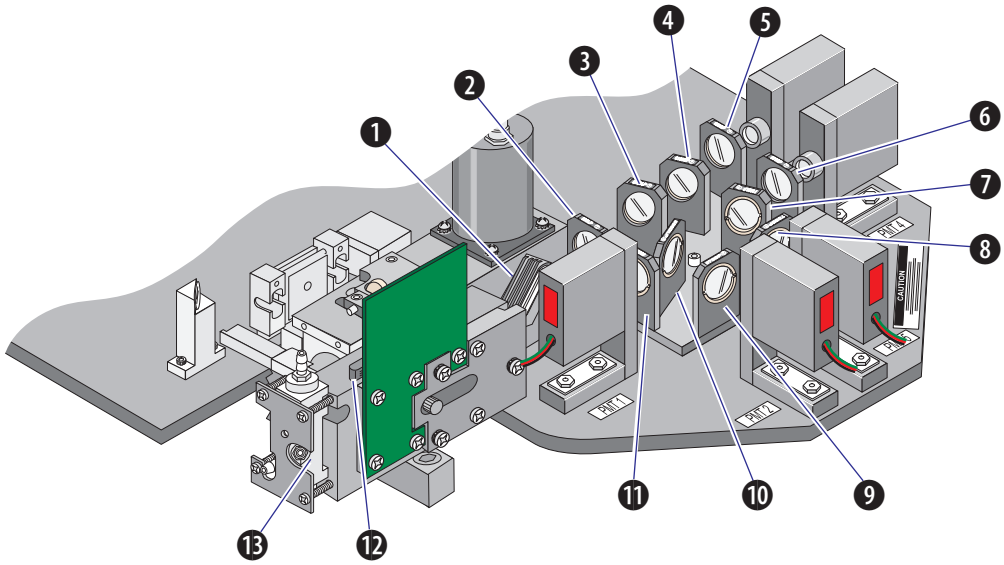

❶	488 DLP	❻	675 BP	⓫	525 BP
❷	500 LP	❼	710 DLP	⓬	530 SP
❸	600 DLP	❽	755 BP	⓭	Flow cell
❹	615 DSP	❾	575 BP		
❺	620 SP	❿	550 DLP		

An additional 655 LP filter has been added to the second laser filter configuration as shown in the illustration below:

Figure 5.7 Second Laser Optional Filter Configuration

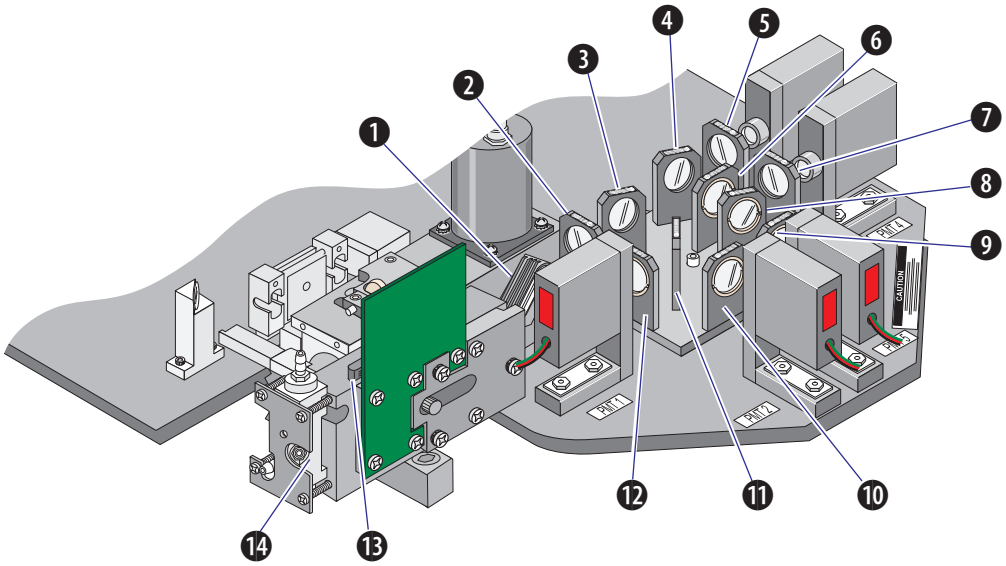

❶	488 DLP	❻	655 LP	⓫	550 DLP
❷	500 LP	❼	675 BP	⓬	525 BP
❸	600 DLP	❽	710 DLP	⓭	530 SP
❹	615 DSP	❾	755 BP	⓮	Flow cell
❺	620 SP	❿	575 BP		

Fluorescent Light

The light the 488 DLP filter transmits goes to a 500 nm long pass filter. This filter blocks any remaining laser light, transmitting only fluorescent light. The remaining optical filters separate the light for the five FL sensors.

Note: This fluorescent light collection description applies to the Dual Laser Filter Block Configuration only.

The first filter in the light path (500 LP) blocks the side scatter light from the Argon laser and transmits all the fluorescence colors and the side scatter light from the red laser. This assembly separates the collected fluorescence signal into five color bands. PMTs 1 to 4 collect signals centered approximately at 525, 575, 610 and 675 nm. PMT5 collects a signal centered approximately at 755 nm. Long pass filters are used to transmit these color bands, block the side scatter light from the optional red laser and provide additional blocking of the side scatter light from the Argon laser. The color bands are designed to measure fluorescence light from the fluorochromes such as FITC, PE, ECD, PC5 or APC, PC7 excited by illumination from the Argon and the optional red lasers. Dichroic filters are used to split colors at 550, 600, 645 and 710 nm. Positions of the dichroic filters have been efficiently designed to reduce the number of optical surfaces fluorescence light must pass to reach the photo sensors. Their locations relative to the optical axis have also been optimized for light to pass symmetrically through each filter. You can individually interchange the optical filters. A small plate holds all the optical filters used to separate fluorescence signals allowing for easy interchange of groups of filters. The filters are precisely mounted in their housing and the filter plate is precisely mounted on the optical plate. There is no need to realign the optical system when the filters or the filter plate are changed.

5.6 SIGNAL PROCESSING

Voltage Pulse Signals

The Cytometer has seven sensors, each generating a voltage pulse signal as each cell passes through the laser beam. A voltage pulse signal is proportional to the intensity of light the sensor received. The Cytometer electronics amplifies, conditions, integrates, and analyzes these pulses.

Peak Signal

Figure 5.8 shows how a peak voltage pulse signal forms as a cell crosses the laser beam.

- Part I of Figure 5.8 shows when the cell enters the laser beam and some light is scattered.
- Part II of Figure 5.8 shows when the cell is in the center of the laser beam and the scattered light, and therefore, the pulse height, reaches a maximum.
- Part III of Figure 5.8 shows when the cell leaves the laser beam and the scattered light decreases.

The intensity of light scatter or fluorescence determines the height of the peak pulse (see Figure 5.8). The time the particle is in the laser beam determines the width of the pulse. Therefore, the total fluorescence (intensity and time) determines the area under the pulse. Figure 5.9 shows how three cells with the same amount of total fluorescence but with different fluorescence intensities, produce different peak pulses.

Figure 5.8 Voltage Pulse Formation, Peak Signal

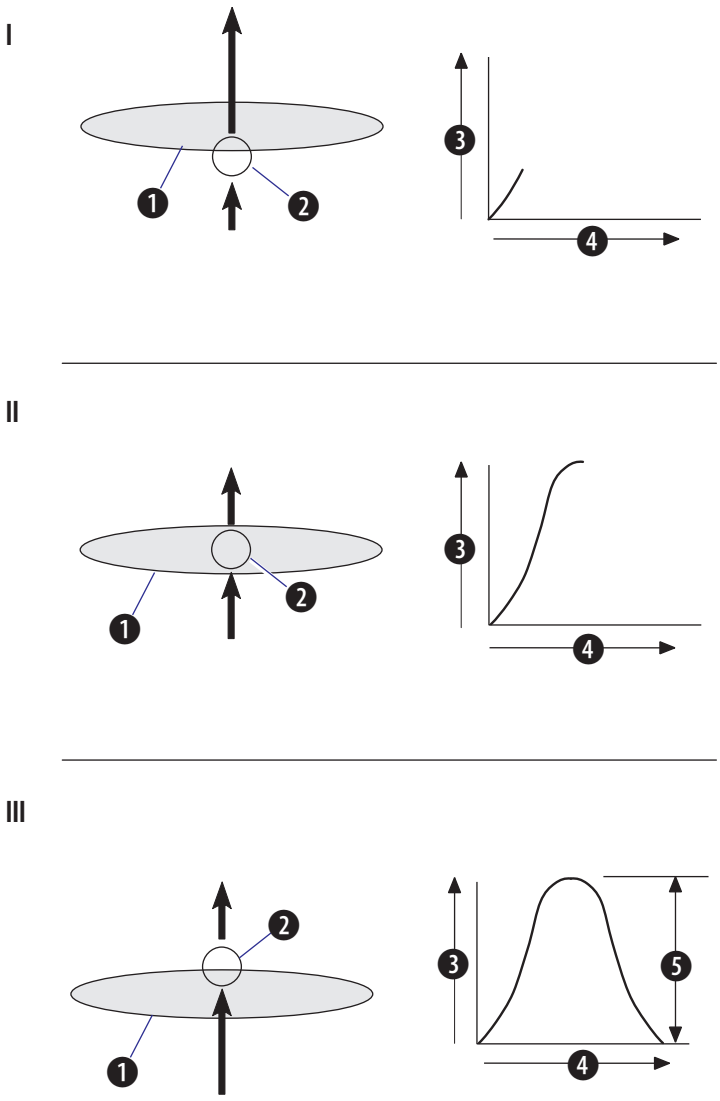

❶ Laser beam
❷ Cell
❸ Volts
❹ Time
❺ Pulse height

Integral Signal

Because the total fluorescence in all three cells is the same, but the distribution is different, the pulse can be integrated to produce an integral signal (see Figure 5.9).

The height of the integral pulse is proportional to the total fluorescence and is obtained when the cell exits the laser beam. The pulse height, however, represents the most intense amount of fluorescence produced. The area under the pulse is proportional to the total fluorescence.

Figure 5.9 Integral and Peak Pulses

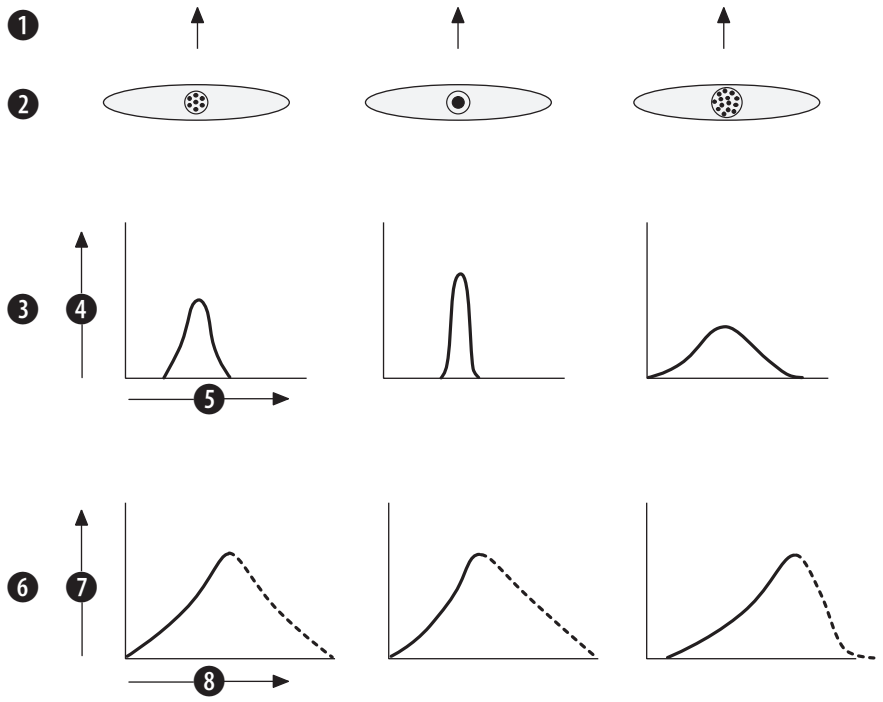

❶	Direction of sample flow	❹	Volts	❼	Volts
❷	Cell in laser beam	❺	Time	❽	Time
❸	Peak pulses	❻	Integral pulses		

Amplification

Some voltage pulses must be amplified so that the characteristics of the cells can be measured.

The system lets you:

- Increase the gain to linearly amplify the integral and peak signals.
- Logarithmically transform the linear data.

A logarithmic transformation accentuates the differences between the smaller pulses and reduces the differences between the larger pulses.

Signals Generated

The instrument sensors can generate these signals (integral unless stated otherwise; LOG stands for logarithmic):

- FS, FS LOG, FS PEAK
- SS, SS LOG, SS PEAK
- FL1, FL1 LOG, FL1 PEAK
- FL2, FL2 LOG, FL2 PEAK
- FL3, FL3 LOG, FL3 PEAK
- FL4, FL4 LOG, FL4 PEAK
- FL5, FL5 LOG, (FL5 uses the AUX signal pathway).

For any given sample, the instrument can create up to eight of these signals, plus the Prism, TIME, and RATIO parameters.

5.7 PROTOCOLS

A Protocol is a collection of information about how the Cytometer and CXP software is set up. Protocols can be created for acquiring samples or analyzing stored data.

It contains the following information:

- Display configuration
- Parameter names and configuration
- Regions
- Gates
- Color definitions
- Statistics
- Instrument settings
- Reporting Templates

Special Protocols and Panels

There are three categories of special Protocols: QC, Cleanse, and AS.

QC Protocols (Export): Any Protocol name beginning with the characters “QC” (upper case only) over-rides the current Export Data Format setting on the Workspace Preferences / Publish tab causing Published data to be formatted as a single row of values. In the case that the Publish Data to MS Excel option is selected, this progressively builds a table on a single spreadsheet.

Cleanse Protocols: Any Protocol name beginning with the word “Cleanse” overrides the Output Options setting for Save LMD on the Workspace Preferences - Acquisition Options tab. This allows you to create protocols that do not write a listmode file to disk on completion.

AS Protocols: There is a series of special protocols which include “AS” in their names. These are components of the AutoSetup applications which operate with the Auto Setup Wizard to set up Volts, Gains and Compensation.

Special Panels

The cleanse panel utilizes two cleanse protocols ('cleanse bleach.PRO' and 'cleanse di water.PRO) that you should use at the end of the working day or shift on your FC 500.

5.8 AUTOMATED SOFTWARE FEATURES

CXP software contains the following automated software features.

- AutoSetup Wizard
- QuickCOMP
- QuickSET
- Automatic Gate Creation
- Automatic Gate Maintenance
- Elliptical and Contour AutoGating
- AutoMATOR Analysis

5.9 PARAMETERS

AUXiliary Parameter

The AUX signal is available to collect a Peak signal from any of the detected parameters when analyzing up to four colors. When using FL5 or analyzing five colors the AUX signal is not available. For any given sample, only one of the following signals can be assigned to AUX:

- FS, FS PEAK
- SS, SS PEAK
- FL1, FL1 PEAK
- FL2, FL2 PEAK
- FL3, FL3 PEAK
- FL4, FL4 PEAK

When to Use the AUX Parameter

When you specify both linear and logarithmic amplification of the same signal, the gain for the linear amplification is also applied to the logarithmic amplification. However, when you specify only logarithmic amplification of a signal, the instrument automatically sets the gain for that signal to 1.0, and you cannot change it.

Use the AUX parameter when you want to:

- Amplify a signal at two different gains.
- Observe a peak signal or integral signal at the same time as the log signal.
- Observe a peak signal at the same time as the integral signal.

Also, the AUX parameter may be used for doublet discrimination. Assign a peak fluorescence signal to AUX so you can measure peak vs. integral fluorescence.

TIME Parameter

The TIME parameter is the amount of time, in seconds, the instrument acquires data. It is displayed on the plot axis in 1-second resolution. The axis labels vary, depending on plot resolution and stop time (duration).

The minimum stop time is 10 seconds, the maximum stop time (maximum duration) is 99,999 seconds and the default stop time is 300 seconds (5 minutes).

When you assign the TIME parameter to a plot axis, the divisions on the axis change accordingly.

To find the time (in seconds) per channel in a one-parameter histogram, divide the stop time (in seconds) by 1,024 (0.001 second = 1.0 ms).

For a two-parameter plot, divide by 64, 128, 256 or 512 depending upon the plot resolution you are using.

RATIO Parameter

The RATIO parameter is calculated, not acquired directly. When you select a parameter, you specify which signal is the numerator and which is the denominator.

$$\text{RATIO} = \frac{\text{Numerator}}{\text{Denominator}} \times 1024$$

A ratio of 1 is at channel 1,023. If you assign RATIO to a plot axis, RATIO events appear at a lower channel if the intensity of the numerator signal is less than the denominator signal.

To calculate the actual ratio at a particular intensity for a one-parameter histogram, divide the intensity by 1,024. For a two-parameter plot, divide by 64, 128, 256 or 512 depending upon the plot resolution you are using.

5.10 PLOT DISPLAY

The results of sample analysis appear on the Workstation screen as graphs called plots. You assign the parameters to the plot axes. Plots can be displayed in black and white or color as:

- Single-parameter histogram plot
- Dual-parameter dot plot
- Dual-parameter contour plot (CXP Analysis Software only)
- Dual-parameter density plot
- Dual-parameter surface plot
- Single-parameter Prism plot
- Overlayed histogram plots (CXP Analysis Software only)
- 3-D tomogram plot (CXP Analysis Software only).

Dual-parameter plots can be displayed in 64 x 64, 128 x 128, 256 x 256, or 512 x 512 resolution. Plots can be displayed on a black or white background.

PRISM

Prism is used to analyze multicolor immunofluorescence samples. With multicolor immunofluorescence a cell is either positive or negative for each of two, three, four or five cell surface markers. A particular combination is called a phenotype. Prism allows you to display percentages on all phenotypic populations in a single plot. It is software derived and can be acquired in either run time or listmode.

Prism is available on up to five parameters. TIME, RATIO, and Prism itself cannot be used for Prism. All other signals can be used for Prism. Generally, FL1, FL2, FL3, FL4, and FL5 are used.

A Prism plot shows a spike or population for each antibody combination with a percent of the total that represents the percent of the total events in the Prism plot. See Figure 5.10.

Figure 5.10 Prism Plot

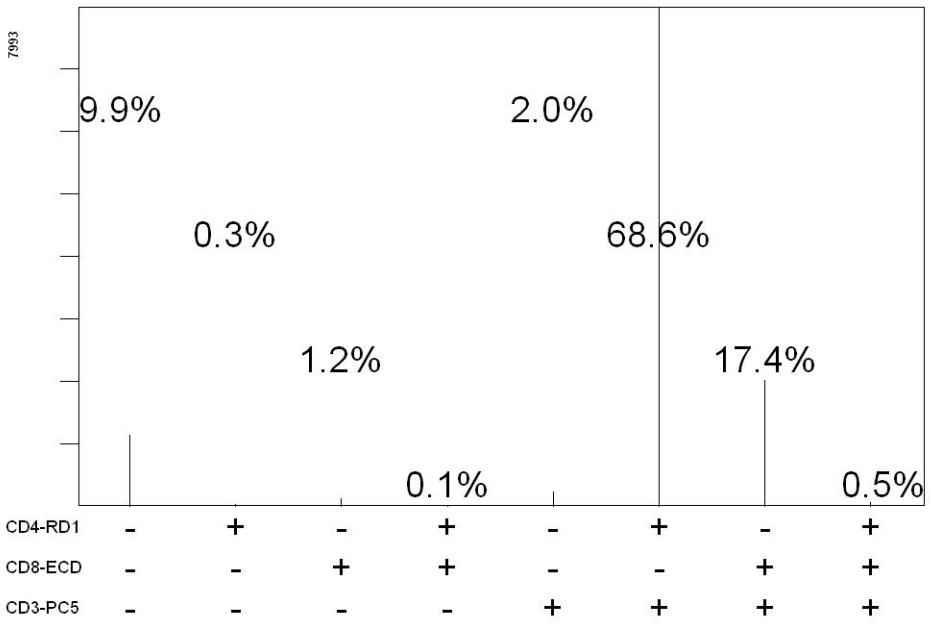

See Prism Plot for instructions on using Prism.

Regions

To analyze data or gate plots, you must first create and assign regions to these tasks. You can create five different types of regions (see Regions Introduction).

The region types are:

- Linear
- Rectangular
- Quadrant
- Polygonal
- Elliptical
- Contour
- On Overlayed histograms only
    - Linked marker
    - Non-linked marker

Once a region is created it can be assigned to function in a specific way. The functions that are available include:

- Analysis
- Prime
- CAL (calibration)
- Gating
- Listmode gating (LIVEGATE)
- Contour AutoGate
- Elliptical AutoGate
- Positives analysis
- Minimum Count.

These functions are not available for all region types.

Gating

The software lets you use gating to specify that only certain cells are to be analyzed. A gate can be defined as the cells that are inside or out of one or more regions.

Data Storage

Sample results can be printed out, saved to a diskette or other removable media, saved to a local hard drive or saved to a network drive. You can store sample results in the form of a list of the measurements from each cell, called listmode data. Listmode data can be replayed into plots or archived for analysis later. Plots can also be saved to a file.

Histogram Statistics

Linear Region Statistics

For linear signals, statistics for histogram regions are calculated as follows:

$$\text{total} = \frac{\text{Number of events in region}}{\text{Total number of events in the gated display}} \times 100$$

$$\text{total} = \frac{\text{Number of cells in region}}{\text{Total number of cells in the file}} \times 100$$

Number = Number of cells in the region

Mode = Intensity containing the largest number of cells within the region.

$$\text{Mean} = \sum_{ML}^{MH} \left(\frac{Cn * Cch}{N} \right)$$

$$\text{SD} = \sqrt{\sum_{ML}^{MH} \frac{(Cn - \overline{X})^2}{N}}$$

$$\text{CV} = \frac{\delta}{\overline{X}} \times 100$$

Where δ = Standard deviation
CV = Coefficient of Variation
M_H = High region marker channel
M_L = Low region marker channel
C_n = Raw digital channel number
C_{ch} = Channel count
N = Integral of all counts between & including marker channels
$\overline{X}$ = Mean channel number (rounded to nearest whole channel)

For Mean and SD, the summations are performed over all the channels that lie within the region.

$$\text{Mean} = \text{median intensity} + 0.5 - \frac{\left[\text{sum(median intensity)} - \frac{\text{area}}{2} \right]}{\text{count in median intensity}}$$

Median intensity = the smallest intensity such that sum (intensity) $\geq \frac{\text{area}}{2}$

Sum (intensity) = sum of events from the lower edge of the region to the intensity

$$\text{Half Peak CV} = \frac{\text{FWHM}}{2.354}$$

Where FWHM=the Full Width Half Max value of a Normal or Gaussian peak.

Log Region Statistics

The method of geometric calculations of Means depends on your Advanced Statistics Configuration.

Log-Log Mean Method

Weighting each channel according to its face value as given by the log scale performs this calculation of Mean.

Example:

When using a four-decade uncalibrated logarithmic display reporting output as Channels, you might give channel zero (the lowest channel) a value $10^{-1} = 0.1$ and on a 1024 channel display, channel 1023 is given the value $10^{-3} = 1000$. All raw digital channel values are converted to an absolute value (Relative Channel Number) in the range 0.1 to 1000 before calculations are performed for the mean.

The mean can then be reported in Channel numbers in the range 0 to 1023 thus:

$$\overline{X}channels = Cd * LOG10\left(\sum_{ML}^{Mh} \frac{10\left(\frac{C_n}{C_d}\right) * Cch}{N}\right)$$

Where:
C_n = Raw digital channel number
C_{ch} = Channel count
C_d = Channels per decade
N = Integral of all counts between & including marker channels
$\overline{X}$ = Mean channel number (rounded to nearest whole channel)

For Calibrated values, the calculation is reported as the calibrated value in the range Log Offset to

$$\overline{X} = Log_Offset * 10\left(\frac{\overline{X}Channels}{Cd}\right)$$

The log offset cannot be zero since a log offset of zero is 10 (minus infinity), which is not possible to represent on paper or on screen. CXP software does not allow log offset values of less than 0.1. Numbers entered in the logarithmic offset are clamped at 0.1 if a number less than this is entered.

Lin-Log Mean Method

This method of Mean calculation is worked out by performing a simple arithmetic mean channel calculation on raw data according to its channel value in the range 0 to 1023 (for 1024 channel data). The Mean value can then be reported as channels (in the range 0 to 1023) or converted to the Relative Channel value.

Using the same data as in the previous example…

Lin-Log Mean method reported in Channel numbers in the range 0-1023 thus:

$$\overline{X}channels = \sum_{ML}^{MH}\left(\frac{Cn * Cch}{N}\right)$$

Where:
C_n = Raw digital channel number
C_{ch} = Channel count
C_d = Channels per decade
N = Integral of all counts between & including marker channels
$\overline{X}$ = Mean channel number (rounded to nearest whole channel)

For calibrated values, the Mean calculation is reported as a value in the range Log Offset to (Log offset* 10 $^{\text{Decades Full Scale}}$) thus:

$$\overline{X} = Log_Offset * 10\left(\frac{\overline{X}Channels}{Cd}\right)$$

The log offset cannot be zero since a log offset of zero is 10 (minus infinity). Since the graphical scale is actually proportional to the exponent, it is not possible to represent this on paper or on screen. Because of this problem, CXP software does not allow log offset values of less than 0.1. Numbers entered in the Logarithmic Offset edit window are clamped at 0.1 if a number less than 0.1 is entered.

6.1 PRECAUTIONS/HAZARDS

Laser/Radiation Precautions

The Cytometer and the MCL bar code reader each contain a laser. The Cytometer can also include an optional second laser. Beckman Coulter's design and manufacture of the instrument complies with the requirements governing the use and application of a laser as specified in regulatory documents issued by the:

- U.S. Department of Health and Human Services and
- Center for Devices and Radiological Health (CDRH).

In compliance with these regulatory documents, every measure has been taken to ensure the health and safety of users and laboratory personnel from the possible dangers of laser use.

Use the instrument according to the information in the manuals.

Use of controls or adjustments or performance of procedures other than those specified herein might result in hazardous radiation exposure.

To ensure your safety, the Cytometer lasers are covered with protective shields. Do not remove these shields.

No user-serviceable assemblies are accessible. Do not attempt to remove the laser or open it.

The instrument has components that are dangerous to the operator. If any attempt has been made to defeat a safety feature, or if the instrument fails to perform as described in its manuals, disconnect the power and contact your Beckman Coulter Representative.

Laser Warning Labels

CDRH-required warning labels are placed near or on covers that, if removed, might expose laser radiation. They are also placed near openings that, if looked into, might expose you to laser radiation.

CDRH-required warning labels are located:

See Figure 6.1 for the Sensing Compartment cover warning label.

See Figure 6.2 for the Optical Area (front view) warning labels.

See Figure 6.3 for the Optical Area (interior view) warning labels.

See Figure 6.4 for the Argon Laser Head warning labels.

See Figure 6.5 for the optional red Solid-State Laser warning labels.

See Figure 6.6 for the location of the optional red Solid-State Laser in the instrument.

See Figure 6.7 for the optional red Helium-Neon Laser warning labels.

See Figure 6.8 for the location of the optional red Helium-Neon Laser in the instrument.

See Figure 6.9 for the Cytometer back panel laser labels.

See Figure 6.10 for the MCL probe housing warning labels.

See Figure 6.11 for the MCL bar code reader warning labels.

Figure 6.1 Laser Labels on the Sensing Compartment Cover

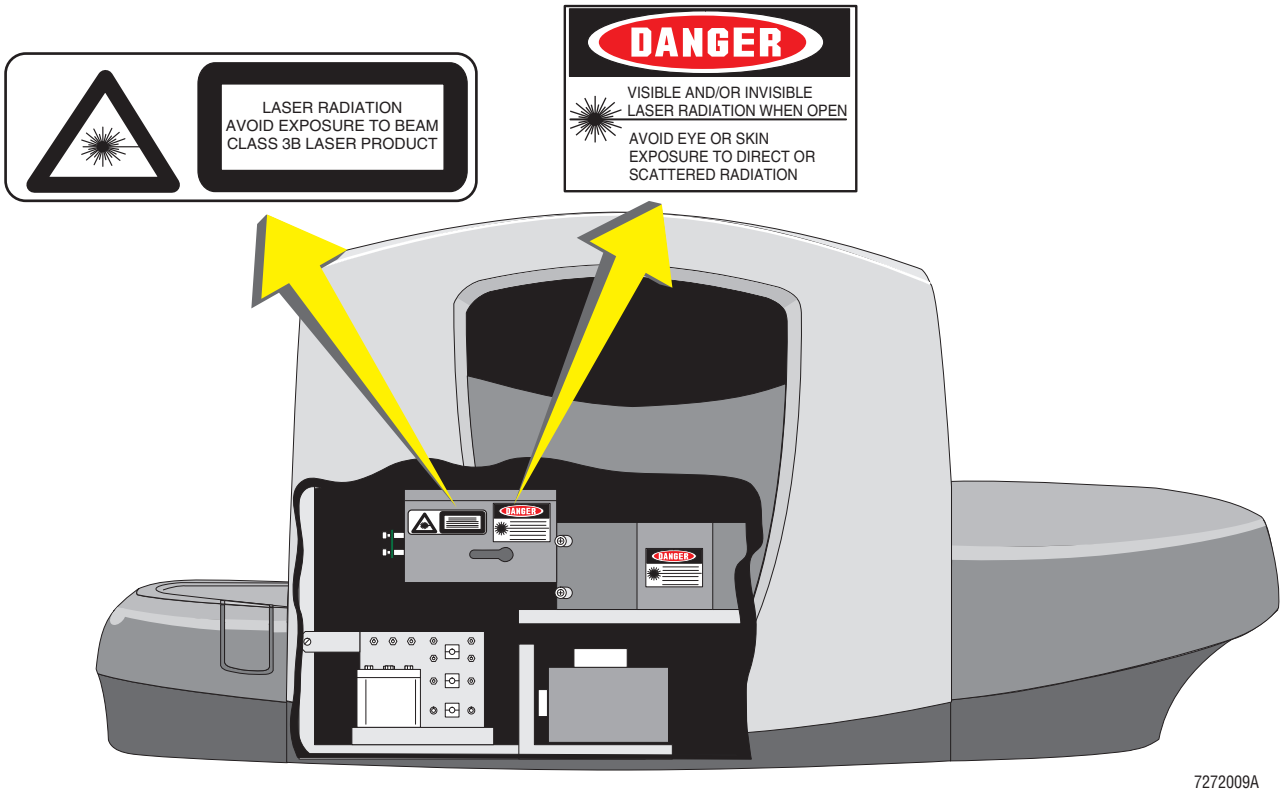

Figure 6.2 Laser Labels in the Optical Area, Front View

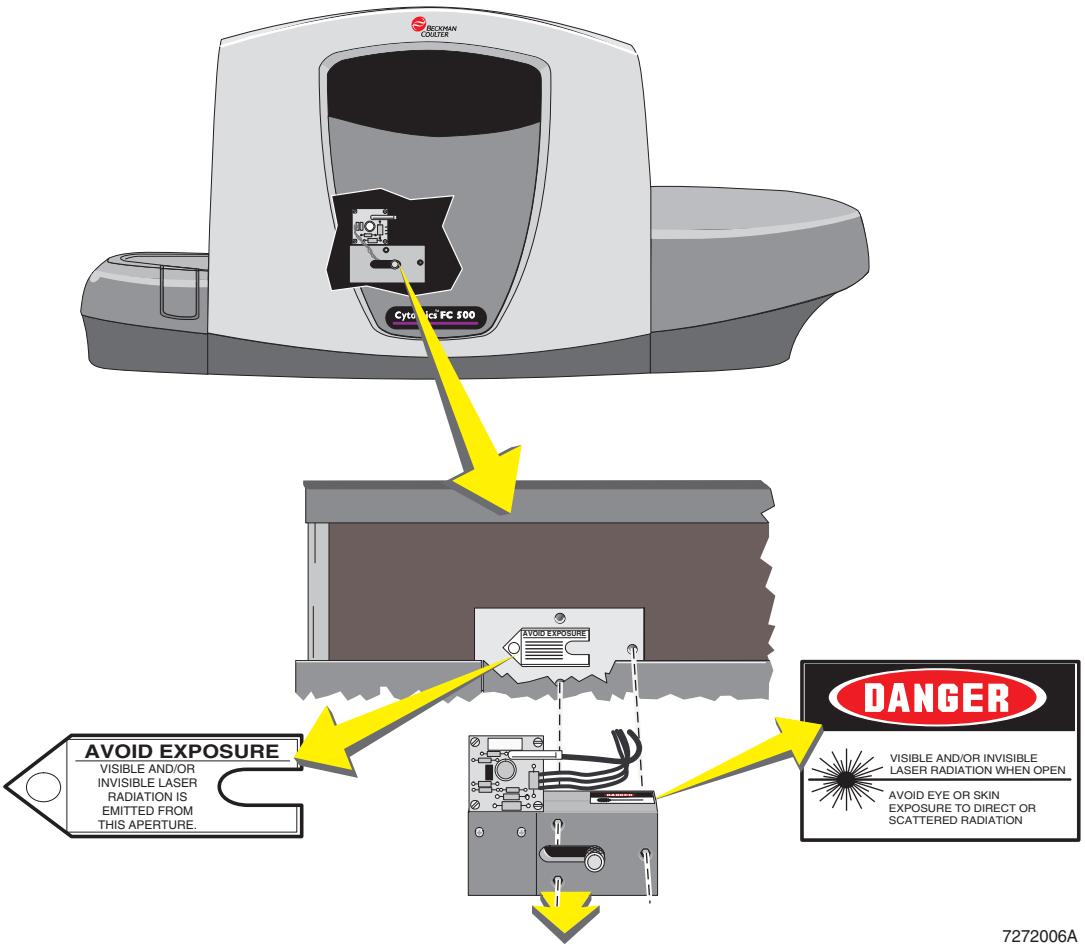

Figure 6.3 Laser Labels in the Optical Area, Interior View

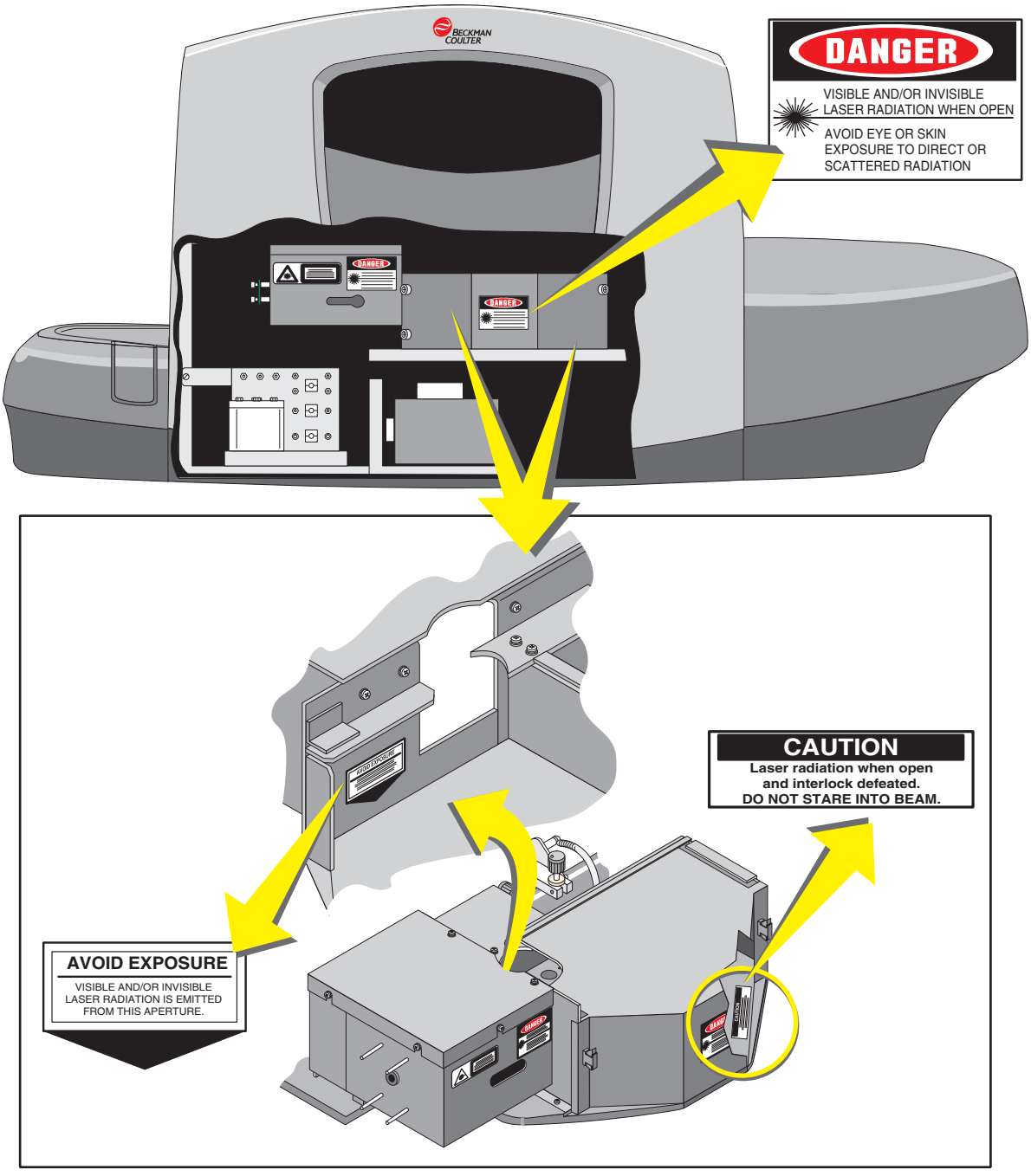

Figure 6.4 Laser Labels on the Argon Laser Head

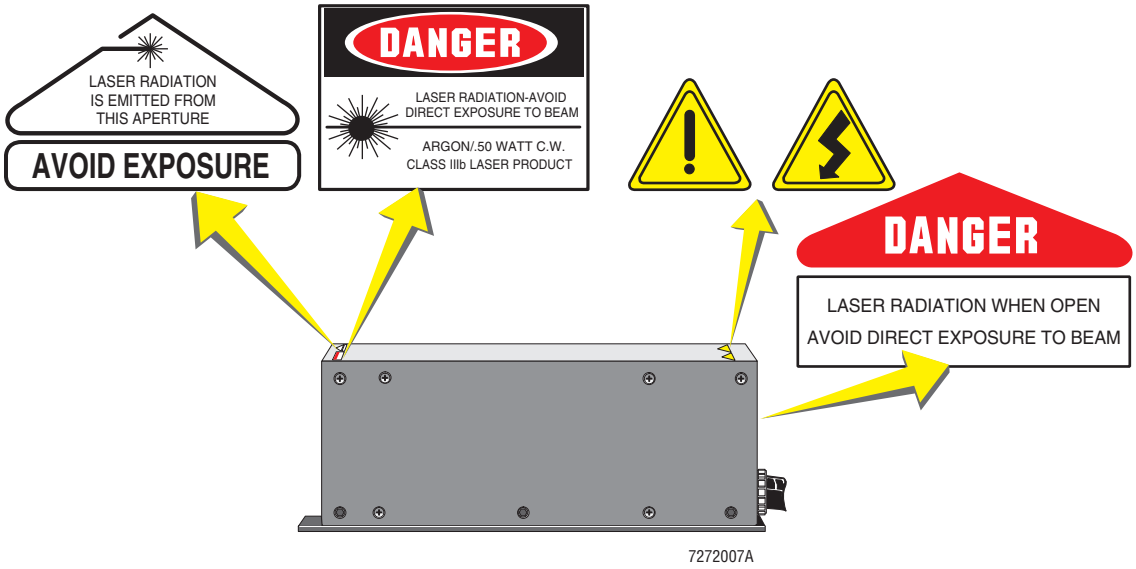

Figure 6.5 Laser Labels for Optional Red Solid-State Laser

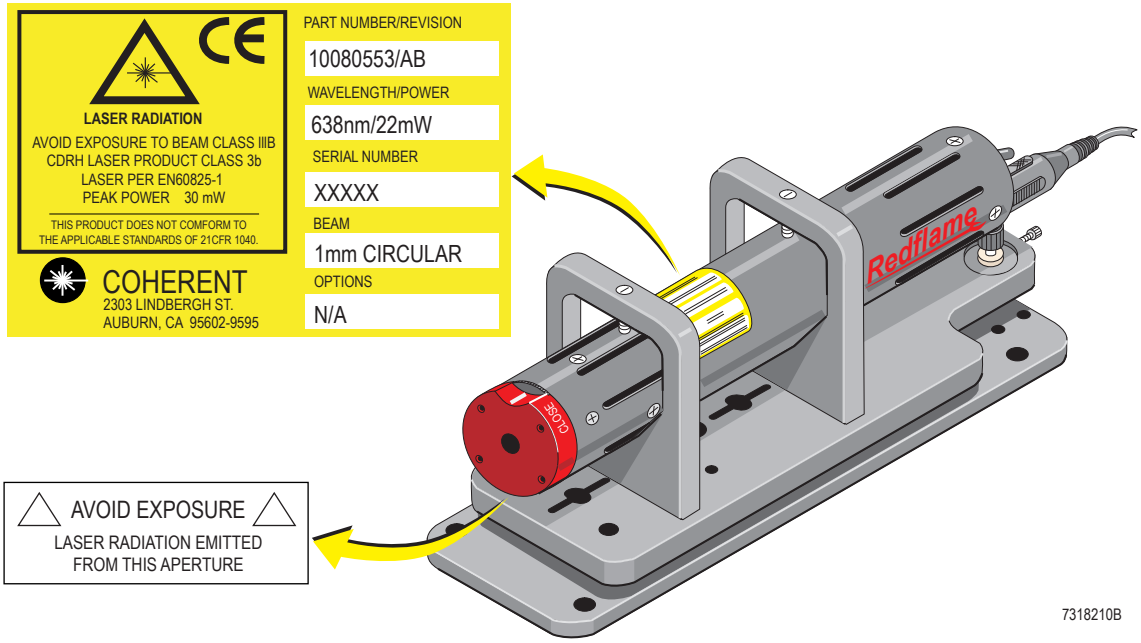

Figure 6.6 Location of the Optional Red Solid-State Laser in the Instrument, Rear View

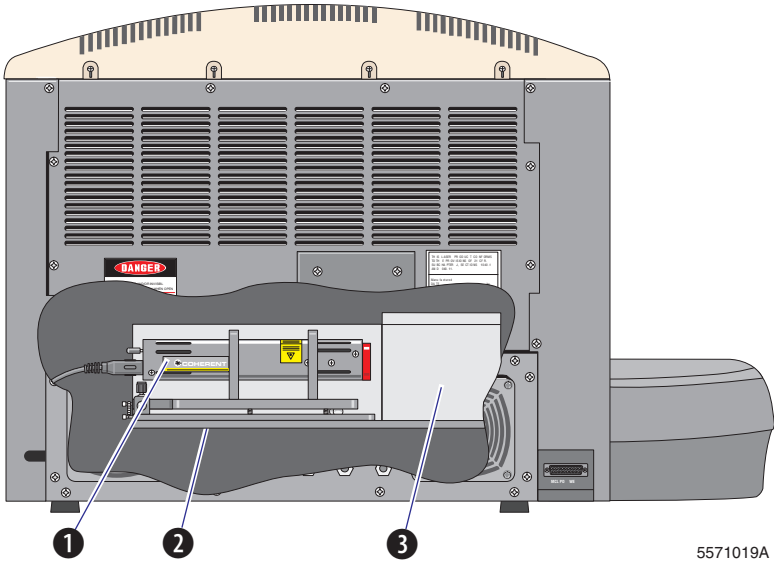

❶ Solid-state laser head	❷ Mounting plate	❸ Protective housing

Figure 6.7 Laser Labels for Optional Red Helium-Neon Laser

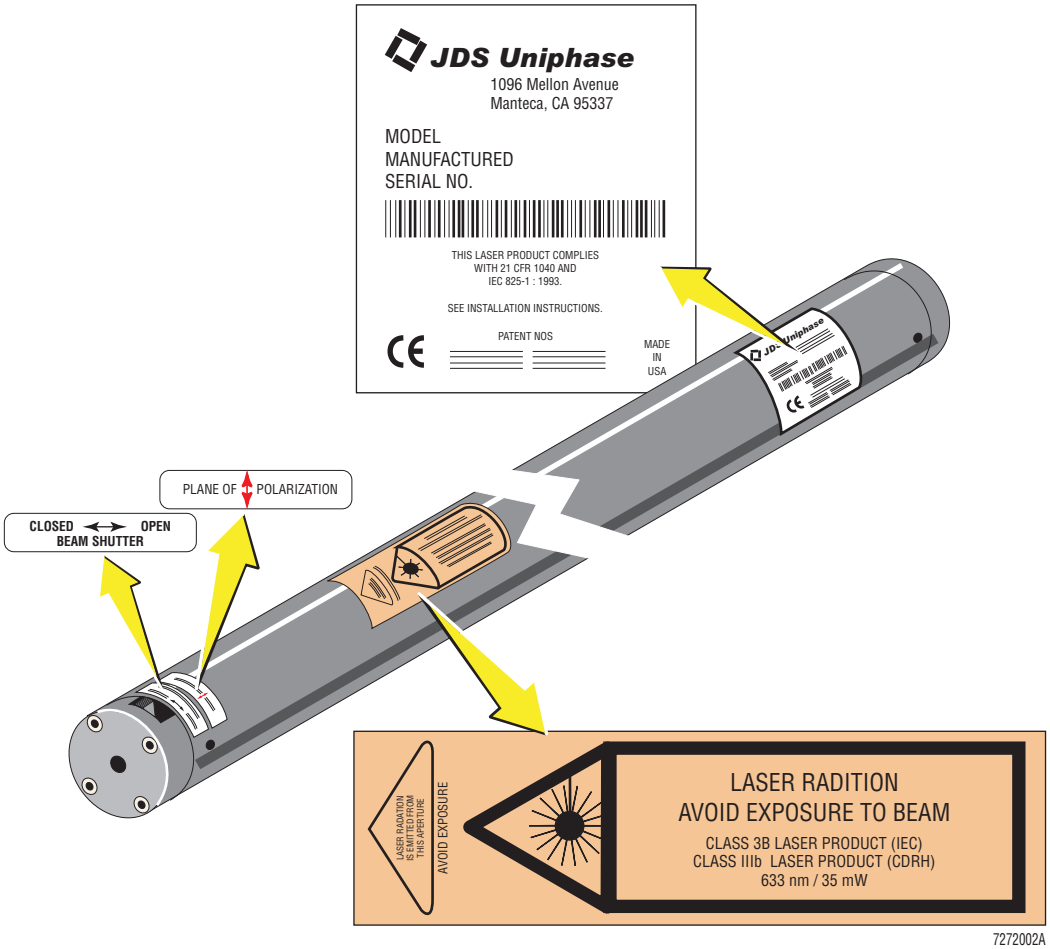

Figure 6.8 Location of the Optional Red Helium-Neon Laser in the Instrument, Rear View

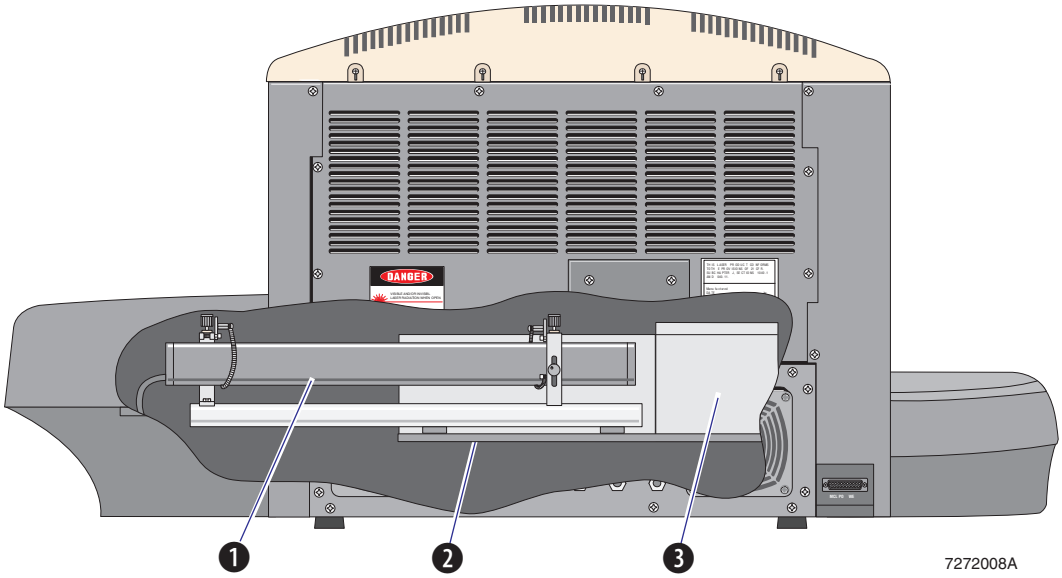

❶ HeNe laser head	❷ Mounting plate	❸ Protective housing

Figure 6.9 Laser Labels on the Cytometer Back Panel

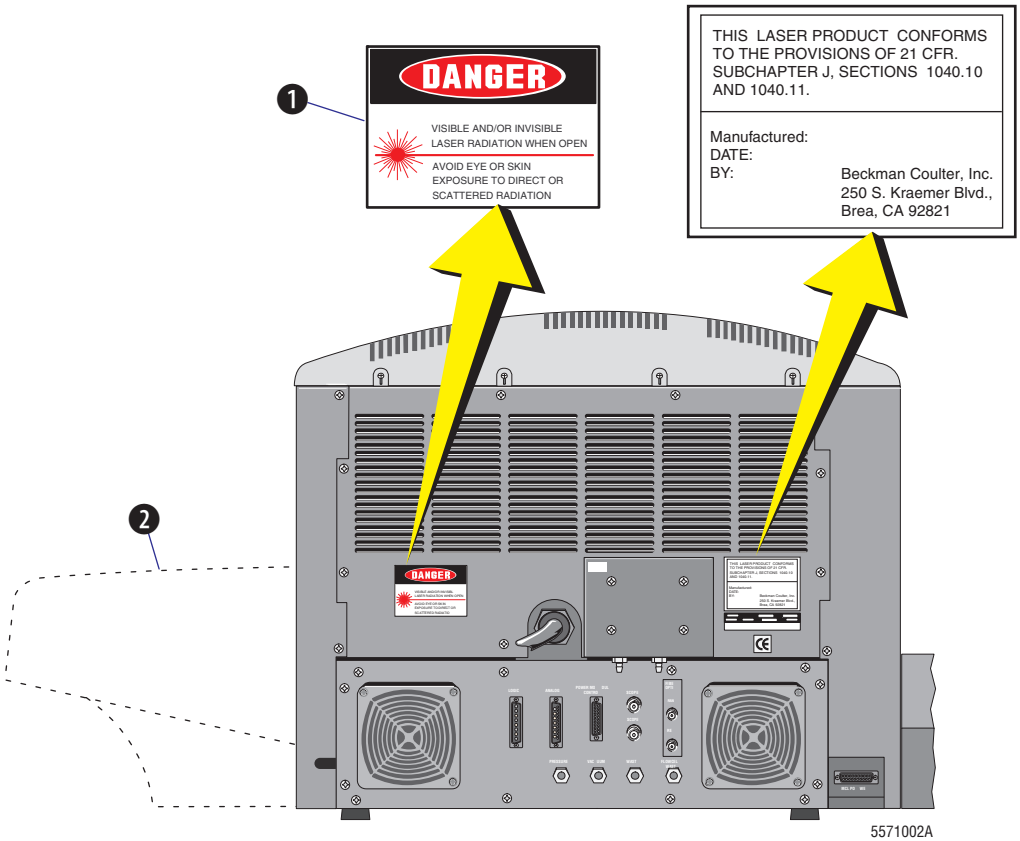

❶ Label is applied only when an optional second laser is installed.	❷ This cover is only present when instrument contains an optional HeNe laser.

Figure 6.10 Laser Labels on the MCL Probe Housing Cover

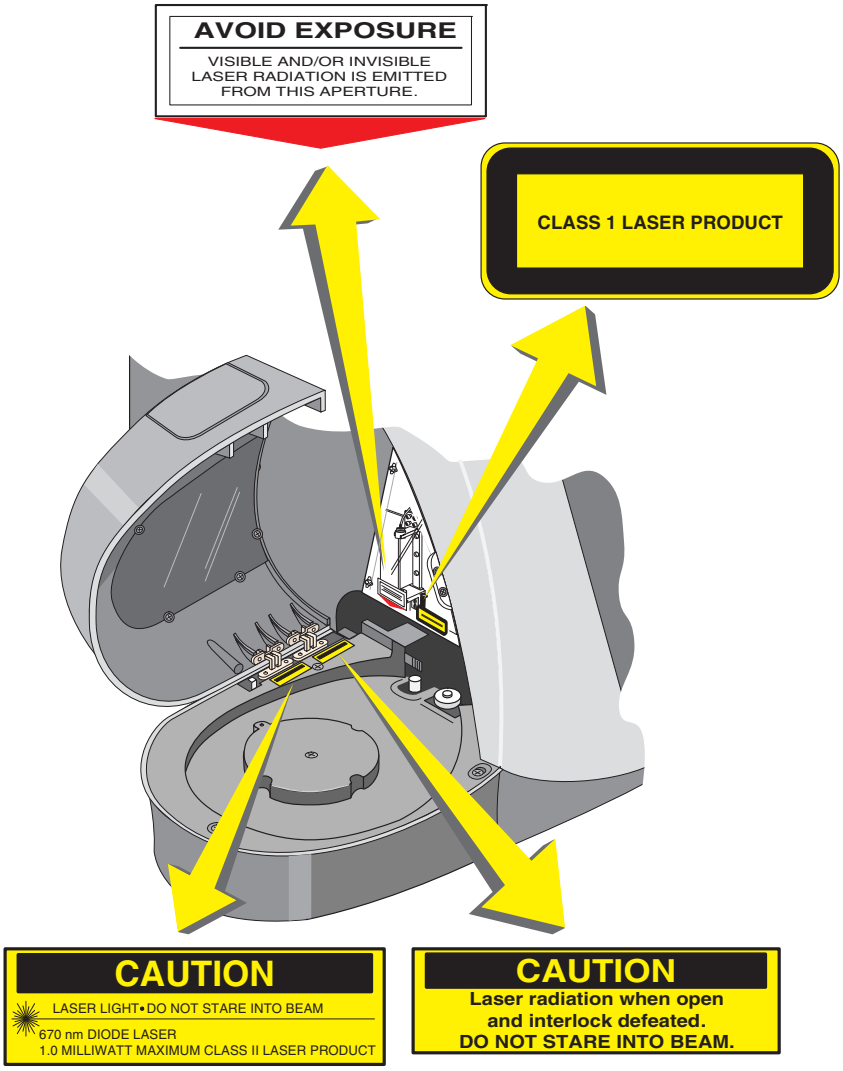

5570002B

Figure 6.11 Laser Labels on the MCL Bar Code Reader

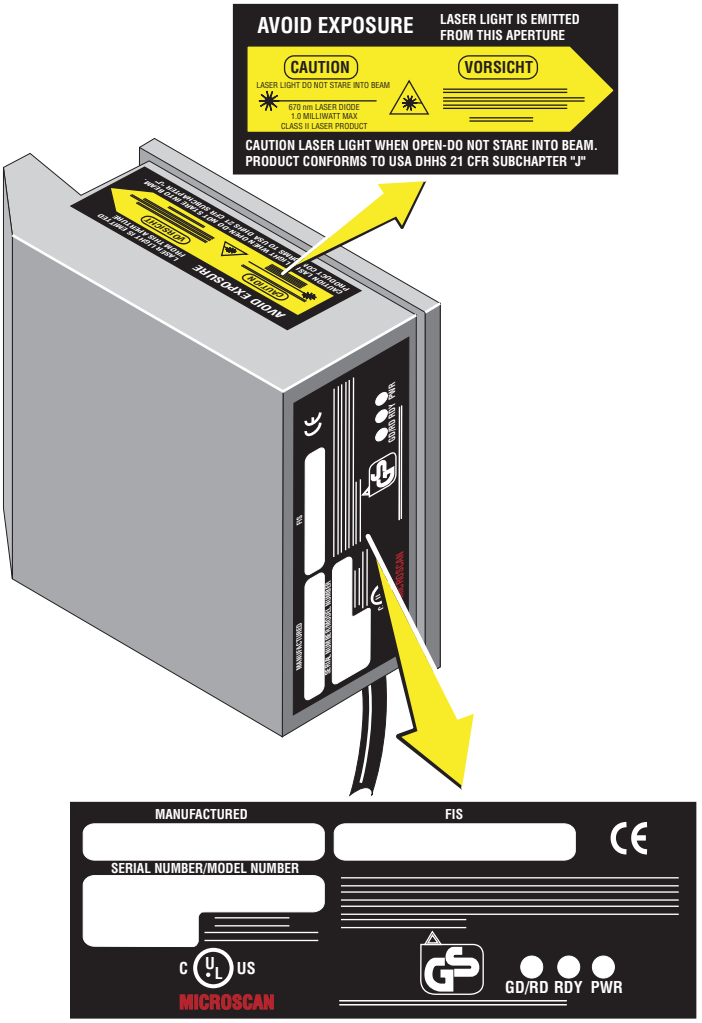

7272001A

Warning Labels on UPS

The  label located near the circuit breakers on the Universal Power Supply instructs the user to refer to product documentation before resetting the circuit breakers.

The  label located next to the power switch on the Universal Power Supply instructs the user to refer to product documentation before powering up the instrument.

Figure 6.12 International Warning Symbol Locations

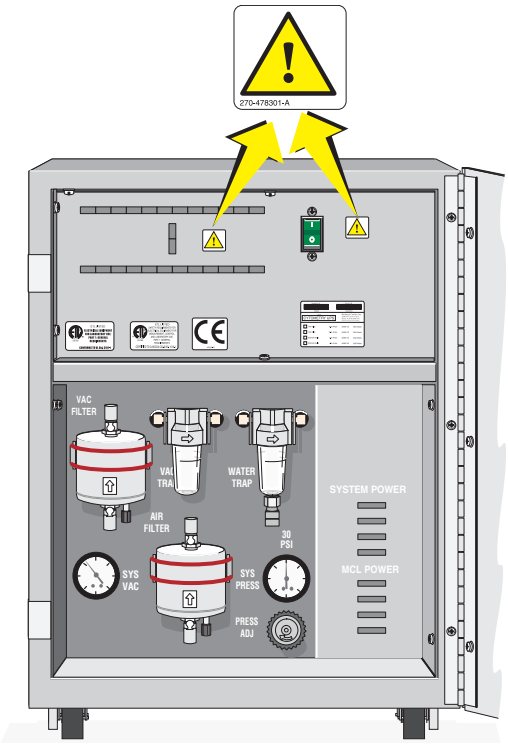

Disposal Precaution

WARNING Risk of biohazard contamination if you have skin contact with the waste container, its contents, and its associated tubing. The waste container and its associated tubing might contain residual biological material and must be handled with care. Clean up spills immediately. Dispose of the contents of the waste container in accordance with your local regulations and acceptable laboratory procedures.

6.2 DISPOSAL OF ELECTRICAL INSTRUMENTATION



It is very important that customers understand and follow all laws regarding the safe and proper disposal of electrical instrumentation.

The symbol of a crossed-out wheeled bin on the product is required in accordance with the Waste Electrical and Electronic Equipment (WEEE) Directive of the European Union. The presence of this marking on the product indicates:

1. that the device was put on the European Market after August 13, 2005 and
2. that the device is not to be disposed via the municipal waste collection system of any member state of the European Union.

For products under the requirement of WEEE directive, please contact your dealer or local Beckman Coulter office for the proper decontamination information and take back program which will facilitate the proper collection, treatment, recovery, recycling, and safe disposal of device.

6.3 RoHS CAUTION LABEL



This logo indicates that this electronic information product contains certain toxic or hazardous substances or elements, and can be used safely during its environmental protection use period. The number in the middle of the logo indicates the environmental protection use period for the product. The outer circle indicates that the product can be recycled. The logo also signifies that the product should be recycled immediately after its environmental protection use period has expired. The date on the label indicates the date of manufacture.

6.4 RoHS ENVIRONMENTAL LABEL



This logo indicates that the product does not contain any toxic or hazardous substances or elements. The "e" stands for electrical, electronic and environmental electronic information products. This logo indicates that this electronic information product does not contain any toxic or hazardous substances or elements, and is green and environmental. The outer circle indicates that the product can be recycled. The logo also signifies that the product can be recycled after being discarded, and should not be casually discarded.

6.5 MAINTENANCE SCHEDULES

Cleaning Schedule

See Table 6.1 for the cleaning schedule.

Table 6.1 Cleaning Schedule

Component	Daily	Weekly	Monthly	Every 60 Days	As Needed
CLEAN THE AIR FILTERS	-	✓	-	-	-
CLEAN THE CLEANING AGENT CONTAINER	-	-	-	✓	-
CLEAN THE MCL SAMPLE HEAD AND THE SAMPLE PROBE	✓	✓	-	-	-
CLEAN THE SAMPLING SYSTEM	✓	-	-	-	-
CLEAN THE SHEATH FLUID CONTAINER	-	-	✓	-	-
CLEAN THE VACUUM TRAP	-	-	-	-	✓

- = Not Applicable

Replacement Schedule

The sheath fluid filter needs to be replaced every 6 months. All other replacement and adjustment procedures should be done on an as needed basis.

6.6 ERROR MESSAGES

See Table 6.2 for a list of all of the error messages.

Display Locations

Error messages can appear at the bottom of the CXP software screen, in the Cytometer Status Messages screen, and in the cytometer.log file.

CXP Software Screen

At the bottom of the CXP software screen, the last error message appears. See Figure 6.13.

> **Note:** If multiple error messages are posted at the same time, only the last one posted appears here. All of the error messages posted appear in the Cytometer Status Messages screen and the cytometer.log file.

Figure 6.13 Error Message on CXP Software Screen, Example

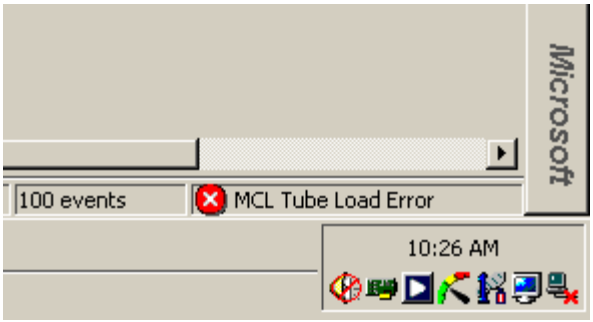

Cytometer Status Messages Screen

In the Cytometer Status Messages screen, the last error message and all uncleared error messages appear. See Figure 6.14.

- To access the Cytometer Status Messages screen, double click the error message at the bottom of the CXP software screen.
- **Clear Status** when you want to delete all messages in the Cytometer Status Messages screen.

Figure 6.14 Cytometer Status Messages Window, Example

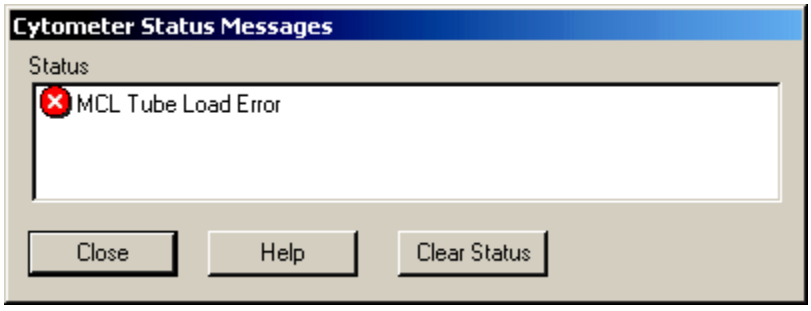

Cytometer.log File

In the cytometer.log file, all messages appear from the last 30 days unless they were manually cleared. Refer to ERROR MESSAGE CYTOMETER.LOG FILE for details. See Figure 6.15.

Figure 6.15 Example of Error Messages in Cytometer.log File

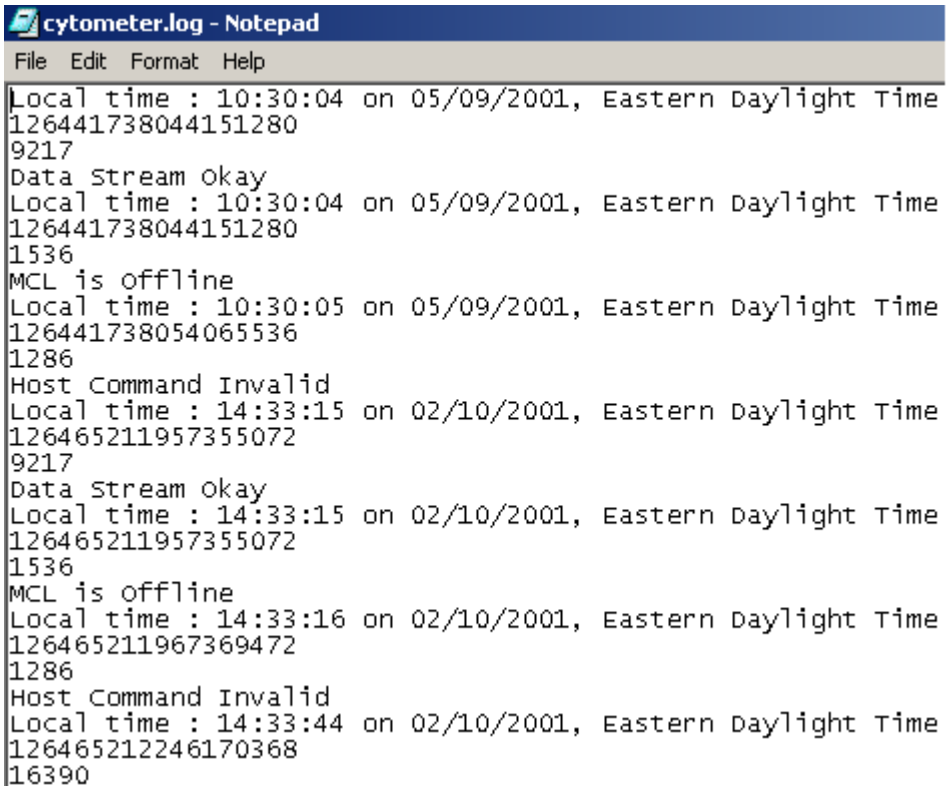

6.7 ERROR MESSAGE CYTOMETER.LOG FILE

The Cytometer error messages are located in the cytometer.log file.

Note: Error messages over 30 days old are automatically removed from the cytometer.log file and placed into the cytometerarchive.log file.

How to Access the Cytometer.log File

From CXP Software

- Press Ctrl+L. See Figure 6.15.

  OR,

- **Cytometer ▸▸ Cytometer Log ▸▸ View Log**. See Figure 6.15.

From Windows Desktop

1. **Start ▸▸ Programs ▸▸ Accessories ▸▸ Windows Explorer ▸▸ My Computer ▸▸ (C:) drive ▸▸ CXP**.
2. Highlight **cytometer.log**.
3. Double click on **cytometer.log** to open. See Figure 6.15.

Cytometer.Log Entry Description

All cytometer.log error message entries are posted in chronological order. Each error message entry consists of four lines (see Figure 6.15):

- Date and time when the error message occurred
- 18-digit number - for Service use only
- Four-digit number - for Service use only
- Error message text. See Table 6.2 for a list of messages and operator actions.

How to Search the Cytometer.log File

To search for a specific word or phrase listed anywhere in the cytometer.log file:

1. **Edit ▸▸ Find…**
2. Type in the word or phrase you want to find (Example: `Waste`).
3. The direction of the search: Up or Down.
4. **Find Next** and the next occurrence of the word in the error log is highlighted.
5. Repeat step 4 as needed or until *Cannot find "XXXXX"* appears.

Other Functions Available

Here are some of the more often used functions available from the cytometer.log file pull down menus: **File**, **Edit**, **Format**, and **Help**:

Print

To print the cytometer.log file:  **File ▸▸ Print**.

Change Font

To change the font:  **Format ▸▸ Font**, and select the new font.

Find Help Topics

To find Help on other topics:  **Help ▸▸ Help Topics**.

Cytometerarchive.log File

The cytometerarchive.log file contains error messages that were automatically moved from the cytometer.log file after 30 days. This log is for Service use.

6.8 ERROR MESSAGES TABLE

Table 6.2 lists the error messages in alphabetical order, with their cause and what to do about them. These are the error messages produced by the Cytometer.

Contact your Beckman Coulter Representative if:

- The recommended action does not solve the problem.
- You need help.

Table 6.2 Error Messages

Message	Cause	Action
Cleanse Level Error	Low cleaning agent.	Fill cleaning agent container. Refer to FILL THE CLEANING AGENT CONTAINER.
	Cleanse sensor failed if the cleaning agent container is full but this error message displayed.	Contact your Beckman Coulter Representative.
Cleanse Level Warning	Low cleaning agent.	Fill cleaning agent container. Refer to FILL THE CLEANING AGENT CONTAINER.
	Cleanse sensor failed if the cleaning agent container is full but this error message displayed.	Contact your Beckman Coulter Representative.
Data Rate Warning	The discriminated data rate exceeded 6,000 cells per second.	1. Dilute the sample or change the discriminator setting. 2. Check that the sheath fluid container cap is tightened. 3. If problem continues, REPLACE THE SHEATH FLUID FILTER.
Data Stream Warning	Data acquisition hardware error	1. Reboot the computer and restart the Cytometer. 2. If problem continues, contact your Beckman Coulter Representative.
Host Command Invalid	The Cytometer software could not process the requested command from the Workstation.	1. Reboot the computer and restart the Cytometer. 2. If problem continues, contact your Beckman Coulter Representative.
Laser Current Error	The amount of current required by the laser is outside the expected range.	Contact your Beckman Coulter Representative.
Laser Power Error	The amount of laser light power is outside the instrument's operating range.	Contact your Beckman Coulter Representative.
Laser Regulation Warning	The laser light power is fluctuating.	Contact your Beckman Coulter Representative.
Laser Start Error	The laser failed to start within 120 seconds.	1. Power the instrument off then on. 2. If problem continues, contact your Beckman Coulter Representative.

Table 6.2 Error Messages *(Continued)*

Message	Cause	Action
MCL Carousel In/Out Error	MCL carousel did not move when requested to do so.	1. Check that there is no obvious obstruction (sample tube) in the MCL area. 2. Check that the 30 psi gage on the power supply is okay. 3. If no obstruction is found, contact your Beckman Coulter Representative.
MCL Carousel Label Error	MCL carousel did not read carousel bar code label.	1. Check that the bar code label is not torn or written on. 2. Try using another carousel. 3. If problem continues, contact your Beckman Coulter Representative.
MCL Carousel Rotate Error	MCL carousel did not rotate correctly	Check that there is no obvious obstruction (sample tube) in the MCL area. If no obstruction is found, contact your Beckman Coulter Representative.
MCL CPU Error	MCL hardware error.	Contact your Beckman Coulter Representative.
MCL Door Open Error	MCL cover is open while the MCL is in use.	Close the MCL cover.
MCL Door Open Warning	MCL cover is open while the MCL is in use.	Close the MCL cover.
MCL EPROM Error	MCL hardware error.	Contact your Beckman Coulter Representative.
MCL Error	MCL hardware error.	Contact your Beckman Coulter Representative.
MCL Interlock Error	The MCL Interlock is open while the MCL is in use.	Contact your Beckman Coulter Representative.
MCL Parallel Recv Error	An MCL communications error.	Contact your Beckman Coulter Representative.
MCL Parallel Send Error	An MCL communications error.	Contact your Beckman Coulter Representative.
MCL Probe Up/Down Error	Short circuit.	Check if a circuit breaker indicator is dark. See RESET THE CIRCUIT BREAKERS.
	MCL sample probe did not move when requested to do so.	Contact your Beckman Coulter Representative.
MCL Program Load Error	An MCL hardware error.	Contact your Beckman Coulter Representative.
MCL RAM Error	An MCL hardware error.	Contact your Beckman Coulter Representative.
MCL Rec from Fault Error	An MCL communications error.	Contact your Beckman Coulter Representative.

Table 6.2 Error Messages *(Continued)*

Message	Cause	Action
MCL Receive Timeout Error	An MCL communication error.	Contact your Beckman Coulter Representative.
MCL Request Error	Communication error between the Cytometer and the MCL.	1. Power the instrument off then on. 2. If problem continues, contact your Beckman Coulter Representative.
MCL Serial 1 Recv Error	An MCL communications error.	Contact your Beckman Coulter Representative.
MCL Serial 1 Send Error	An MCL communications error.	Contact your Beckman Coulter Representative.
MCL Serial 2 Recv Error	An MCL communications error.	Contact your Beckman Coulter Representative.
MCL Serial 2 Send Error	An MCL communications error.	Contact your Beckman Coulter Representative.
MCL Transmit Timeout Error	An MCL communication error.	Contact your Beckman Coulter Representative.
MCL Tube Displaced Error	A tube is positioned incorrectly in the MCL.	Contact your Beckman Coulter Representative.
MCL Tube Jam Error	A tube is stuck in the MCL.	Contact your Beckman Coulter Representative.
MCL Tube Load Error	There is a bad seal between the MCL sample probe guide and sample tube.	Put sample into another tube.
MCL Tube Position Error	The MCL did not rotate to the correct tube position or there was an error reading the position bar code on the carousel.	Contact your Beckman Coulter Representative.
MCL Tube Up/Down Error	Unable to load or unload the sample tube from the MCL sampling position.	1. Check that the labels on the sample tubes are secure and are not adhering to the walls of the carousel. 2. Check that there is no crack in the sample tube. 3. If problem continues, contact your Beckman Coulter Representative.
Sample Pressure Error	There may be a leak caused by a bad sample tube or a bad sample head.	Inspect sample tube and sample head for damage. Change as required. See REPLACE THE MCL SAMPLE HEAD.
	Bad regulator or tubing.	Contact your Beckman Coulter Representative.
Sensors Stream Warning	There was an error in the communication of the instrument operating data packet from the acquisition hardware to the Cytometer software.	1. Reboot the computer and restart the Cytometer. 2. If problem continues, contact your Beckman Coulter Representative.

Table 6.2 Error Messages *(Continued)*

Message	Cause	Action
Sheath Drawer Error	The sheath fluid (reagent) drawer is open.	Close the reagent drawer completely.
Sheath Level Error	There is not enough sheath fluid for further sample analysis.	Fill sheath fluid container. See FILL THE SHEATH FLUID CONTAINER.
Sheath Level Warning	The first time this message is displayed, there is enough sheath fluid for about 5 minutes of sample analysis.	Fill the sheath fluid container. See FILL THE SHEATH FLUID CONTAINER.
	If the sheath fluid container is full, the sheath fluid sensor failed.	Contact your Beckman Coulter Representative.
Sheath Pressure Error	The sheath fluid pressure is outside the system's operating range.	1. Check sheath fluid and cleaning agent container caps for tightness. 2. If problems continues, contact your Beckman Coulter Representative. 3. If problem continues, REPLACE THE SHEATH FLUID FILTER.
State Machine Failure	Cytometer software failure.	1. Power the instrument off then on. 2. If problems continues, contact your Beckman Coulter Representative.
System Pressure Error	Pressure line is not connected between the power module and the Cytometer.	Connect the pressure line.
	The pressurized air supply is outside the system's operating range.	1. Go to the Ready State, then check that the system pressure is 30 psi. 2. Run a sample and monitor the system pressure. If the system pressure drops below the range specified in the instrument manual, then contact your Beckman Coulter Representative.
	Short circuit.	Check if a circuit breaker indicator is dark. See RESET THE CIRCUIT BREAKERS.
System Vacuum Error	Liquid in the vacuum trap.	Check that the vacuum trap (on the front of the Power Supply) is tight and is less than 1/4 full of fluid. If it is more full, empty it (see CLEAN THE VACUUM TRAP).
	Vacuum line is not connected between the power module and the Cytometer.	Connect the vacuum line at the back of the instrument.
	Hardware problem.	Contact your Beckman Coulter Representative.
Temperature Error	Temperature inside the Cytometer is above 60°C.	1. Clean your air filters. See CLEAN THE AIR FILTERS. 2. If problem continues, contact your Beckman Coulter Representative.

Table 6.2 Error Messages *(Continued)*

Message	Cause	Action
Temperature Sensor Failure	Temperature sensor failure.	Contact your Beckman Coulter Representative.
Temperature Warning	Temperature inside Cytometer is above 50°C.	1. Clean your air filters. See CLEAN THE AIR FILTERS. 2. If problem continues, contact your Beckman Coulter Representative.
Transputer 1 Error	Cytometer software error.	At the Workstation turn the system off, and then turn it back on.
Transputer 2 Error	Cytometer software error.	At the Workstation turn the system off, and then turn it back on.
Transputer Link Error	A Cytometer computer communications error.	Contact your Beckman Coulter Representative.
Transputer Link Warning	A Cytometer computer communications error.	Contact your Beckman Coulter Representative.
Unknown Stream Warning	An unidentified data packet communication error occurred between the acquisition hardware and the Cytometer software.	1. Record an entry in the Action Log Sheet. 2. Reboot the computer and restart the Cytometer. 3. If problem continues, contact your Beckman Coulter Representative.
Vacuum Chamber Warning	The liquid level in the vacuum chamber is too high.	1. Check that the vacuum trap (on the front of the Power Supply) is tight and is less than 1/4 full of fluid. If it is more full, empty it (see CLEAN THE VACUUM TRAP). 2. If problem continues, contact your Beckman Coulter Representative.
Waste Backpressure Error	The filter on the waste container vent line is probably wet, clogged, or disconnected.	1. Check the waste vent filter for the presence of liquid and a proper connection. 2. If problem continues, contact your Beckman Coulter Representative.

Table 6.2 Error Messages *(Continued)*

Message	Cause	Action
Waste Level Error **Note:** The waste sensor is a float device located in the waste container cap. When the waste container is full, the float device triggers a *Waste Level Error* and the instrument automatically transitions to the Idle mode. If the float device in the waste container cap experiences any physical movements up or down, the *Waste Level Error* may transition to a *Waste Level OK* prompt and then back again to *Waste Level Error*. When the initial *Waste Level Error* occurs, the system remains in the Idle mode ( ) to allow the Operator to empty the waste container.	There is not enough empty volume in the waste container for further sample analysis.	Empty the waste container. See EMPTY THE WASTE CONTAINER.
Waste Level Warning	There is enough empty volume in the waste container for about 5 minutes of sample analysis.	Empty the waste container. See EMPTY THE WASTE CONTAINER.
	If the waste container is not full, the waste sensor failed.	Contact your Beckman Coulter Representative.

6.9 SOFTWARE MESSAGES

Table 6.3 lists the software messages, with their cause and what to do about them. These are messages produced by the Software.

Contact your Beckman Coulter Representative if:

- The recommended action does not solve the problem.
- You need help.

Table 6.3 Software Messages

Message	Cause	Action
An unexpected error has occurred in the AutoSetup module. You are advised not to continue using this module unless the problem can be resolved.	On initializing the dialog a problem is detected with the definitions.	Rerun the Application Definition Wizard
An Unspecified error occurred	An unknown error occurred.	Contact your local Beckman Coulter Representative.
Error processing Listmode Data. System memory could not be allocated for data processing.	System could not allocate memory to process 20 bit listmode data or could not allocate memory for the compensation 20 bit data input buffer or could not allocate memory for the compensated data buffer or enough memory to allocate to process listmode file.	Discard results and printouts, and restart software. Contact your local Beckman Coulter Representative if problem persists.
The file contains errors. The data checksum does not match the data.	Listmode data checksum stored does not match checksum recalculated.	The listmode data is corrupt. Recover the original listmode file from backup or archive.
Baseline Offset - not available	On starting CXP the 3mv binary file is not found.	Exit and restart the CXP software. If the error recurs, use Windows Explorer to verify the presence of C:\CXP\3mv.bin. If it is not there, reinstall the CXP software.
Insufficient Memory	System could not allocate memory to load FCS File data, load FCS File data information or create an FCS File.	Contact your local Beckman Coulter Representative.
set user logon in exivd returned -1	exivd__perform_analysis() function returned error code on EXP__LOGON.	Contact your local Beckman Coulter Representative.
set admin password in exivd returned -1.	exivd__perform_analysis() function returned error code on EXCP_ADMIN.	Contact your local Beckman Coulter Representative.
Error - Failed to set user login in exivd.	System call to exivd failed during log on or set admin password.	Contact your local Beckman Coulter Representative.
set user logoff in exivd returned -1.	exivd__perform_analysis() function returned error code on EXP__LOGOFF.	Contact your local Beckman Coulter Representative.

Table 6.3 Software Messages *(Continued)*

Message	Cause	Action
Error - Failed to set user logoff in exivd.	System call to exivd failed during log off.	Contact your local Beckman Coulter Representative.
The profiles have been modified outside of this application.	The modified user profiles cannot be saved because the profile file has been updated by another application during the modifications.	Redo work.
Error creating directory: <<directory name>>	The system could not create a user directory when the user tried to create a new user or modify an existing one.	Contact your local Beckman Coulter Representative.
An error occurred during creation of the remote profiles.	Error occurred when creating a remote user profile database.	Contact your local Beckman Coulter Representative.
An unspecified error occurred when creating/modifying the user details	An error occurred creating a user file.	Exit and restart the CXP software. Exit any other software applications that may be running.
There were errors writing the QC export file to disk.	There was an error generating to QC file.	In Region Properties, verify a Quality Control product is selected for any QC Export Region.
An unspecified file error occurred while writing the QC export file to disk.	System level error occurred when writing the file.	In Region Properties, verify a Quality Control product is selected for any QC Export Region. Verify QC product is present in Edit Products dialog box.
An unspecified error occurred while reading the QC Product file.	System level unspecified error occurred when reading the QC file.	Exit and restart the CXP software. Exit any other software applications that may be running.
AutoGating Errors. Region <<region-name>>: Autogating.DLL failed.	Autogate dll returned a failure code.	Contact your local Beckman Coulter Representative.
AutoGating Errors. Region <<region-name>>: Peak search result is outside Travel range.	Autogate on contour plot is too far from peak to travel.	Contact your local Beckman Coulter Representative.
There is a dependency between gates. The following gates will not be processed as autogates:	An autogate dependency will not allow autogating.	Verify gating logic to resolve gating errors.
The QC Product file could not be opened.	The QC product file could not be opened due to the file not being present in the specified location or the file is invalid.	Contact your local Beckman Coulter Representative.
Could not build the in-memory directories list. This will not stop CXP running, but it is highly recommended that it is corrected as areas such as Clinical Panels and Quality Control rely on this list.	Directory file path missing or could not retrieve file path or user profile missing.	Contact your local Beckman Coulter Representative.

Table 6.3 Software Messages *(Continued)*

Message	Cause	Action
Could not write the directories locations to disk. This will not stop CXP running, but it is highly recommended that it is corrected as areas such as Clinical Panels and Quality Control rely on this file.	Error loading the directory paths file.	Contact your local Beckman Coulter Representative.
An unspecified file error occurred while reading the Clinical Panel file from disk.	A system level error occurred when reading the clinical panel file.	Contact your local Beckman Coulter Representative.
An unspecified file error occurred while writing the Clinical Panel file to disk.	A system level error occurred when writing the panel file to disk.	Check for space and access rights.
An unspecified file error occurred while writing the patient export file to disk.	System level error occurred when writing the file.	Check user access rights etc. Contact your local Beckman Coulter Representative.
Cannot create patient export plot image file.	Could not create the image.	Contact your local Beckman Coulter Representative.
An unspecified file error occurred while writing the patient export file to disk.	A system level error occurred when writing the patient report.	Contact your local Beckman Coulter Representative.
Error writing file.	A system level error occurred writing the export file.	Check hard drive space, access rights and write protection on media.
Critical error writing file.	A critical system error occurred writing the export file.	Check hard drive space, access rights and write protection on media.
Error writing file.	An error occurred writing the file.	Check hard drive space, access rights and write protection on media.
COleException. SCODE: <<error-code>>.	An error occurred when opening the link to Excel.	Close Excel if it is open and retry the export.
COleDispatchException. SCODE: <<error-code>>, Description: <<error-code-description>>.	An error occurred when writing to Excel.	Close Excel if it is open and retry the export.
Error writing archive file.	A system level error occurred writing the printer information file.	Check hard drive space and access rights.
Error writing file.	A system level error occurred writing the printer information file.	Check hard drive space and access rights.
Critical error writing file.	A critical error occurred writing the printer information file.	Check hard drive space and access rights.
Printer Setup file contains errors.	A critical error occurred writing the printer information file.	None, message is informational.
Error invalid file.	The printer file header length is wrong.	None, message is informational.
Error out of memory	System could not allocate memory.	Close any unnecessary applications and consider restarting the workstation.

Table 6.3 Software Messages *(Continued)*

Message	Cause	Action
Error reading archive file.	A system level error occurred when reading the printer file.	None, message is informational.
Error reading file.	A system level error occurred when reading the printer file.	None, message is informational.
Critical error reading file.	A critical error occurred when reading the printer setup file.	None, message is informational.
Invalid file length or not a QC File	The length of the file does not match that calculated from the header information.	The file is not usable.
Error reading QC file.	A header or baseline information is missing from the file.	The file is not usable.
Error reading archive file.	A system level error occurred when reading the file.	Retry
Error reading file.	A system level error occurred when reading the file.	Retry
Critical error reading file.	A critical error occurred when reading the file.	Check hard drive space and access rights.
can't browse!!	The browser could not be set to the url.	Check hard drive space and access rights.
Not a valid worklist file.	Either it is not a worklist file or the panel information was invalid.	If you have selected a 'worklist' then you should obtain a backup copy and use that or select a *.wls file.
The file selected contains more panels than is physically possible for a carousel - the file may be corrupted.	There are more than 32 data sections.	You should select an appropriate file or replace the selected file.
The file selected contains an invalid panel. Please ensure that the panel file exists and is up to date in the Report Generator.	The panel file information is invalid.	You should select an appropriate file or replace the selected file or update the panel file it uses.
The file selected describes a panel that has a different number of tubes to the panel file. Please ensure that the panel in the Report Generator is up to date.	The panel uses a different number of tubes to that specified in the worklist.	You should select an appropriate file or replace the selected file or update the panel file it uses.
Carousel Overflow Carousel tube limit reached. Select OK to locate the first tube of the next carousel. Select cancel to clear the carousel number.	On initializing carousel there are too many locations used by the panels.	Modify the worklist.
General Exception caught.	A system level error occurred loading the histogram data.	Replace the file.
Parameters selected on cytometer do no match parameters displayed in plots. Plots will be updated.	Non-FC 500 protocol opened.	Select OK and verify correct cytometer settings to ensure listmode files acquired with this protocol contain valid data.

Table 6.3 Software Messages *(Continued)*

Message	Cause	Action
Incorrect CytoSettings found in protocol.	The cytosettings in the protocol caused an error.	Correct the cytosettings in the protocol.
Warning: One or more error(s) occurred while saving the settings file(s).	After approving the AutoSetup there was a system error, previously reported, moving the settings file(s).	Contact your local Beckman Coulter Representative.
Application mismatch problem - aborting	The worklist contains a protocol which relates to a specific AutoSetup application running after a protocol which does not have an AutoSetup application specified. The AutoSetup wizard cannot process mismatched applications without invalidating compensation/instrument settings.	Reschedule the AutoSetup applications or modify the panel to remove the application mismatch.
Data exception occurred.	Corrupt data caused exception in painting a plot.	Contact your local Beckman Coulter Representative.
There is no data in the instrument installation file.	The meta data is empty.	None, message is informational.
An unspecified file error occurred while writing the instrument installation file to disk.	A system level error occurred writing meta data.	Contact your local Beckman Coulter Representative.
CreateImageBitmap: Render call failed.	Analysis software only not in CXP:- Direct X failed to render the bitmap.	None, message is informational.
CreateImageBitmap: Update call failed.	Analysis software only not in CXP:- Direct X failed to display the bitmap.	None, message is informational.
The romlock drivers could not be loaded. We will now run in demo mode.	The romlock driver could not be found.	Reinstall CXP software.
Can not retrieve parameter resolution	In analysis mode the plot X or plot Y resolution is invalid.	Contact your local Beckman Coulter Representative.
There was a fatal error recovering Workspace Preferences. The system has become unstable.	Workspace preferences could not be accessed.	Please exit the software and restart.
Cytosettings not in acceptable format.	Uploading cytosettings from Listmode file to instrument failed.	Choose a valid Listmode file for settings.
ATTENTION: Results for this sample are valid. However the tube may have been diluted post analysis and should not be re-run. Close MCL cover to continue	The door was open at the end of acquisition.	Discard sample and close MCL cover to continue.
Unable to create FlowPAGE2 window.	Unable to create a FlowPAGE2.	Close any unnecessary applications and restart CXP software.
Opening a protocol will clear the acquisition history in the worklist. Do you want to proceed?	After acquisition opening a protocol will clear the worklist. Asks the user if they wish to proceed.	Select Yes if you want to clear the displayed acquisition history and clear the Worklist.

Table 6.3 Software Messages *(Continued)*

Message	Cause	Action
Incorrect Cytometer Serial Number. The serial number in the instrument settings file does not match the cytometer. The carousel will be aborted.	The instrument settings file does not belong to the instrument.	Ensure a correct settings file is used.
Bad data pointers!	System would not lock memory to enable painting or printing of histogram.	Contact your local Beckman Coulter Representative.
Failed to create empty document.	System message to say document for new view could not be created. Message appears in local language.	Contact your local Beckman Coulter Representative.
Couldn't allocate enough memory space for Data Store.	Not enough memory to allocate a data store to open an FCS file. Software exits.	None, message is informational.
Couldn't allocate enough memory space for Meta Data.	Not enough memory to allocate a metastore to open an FCS file. Software exits.	None, message is informational.
Couldn't allocate enough memory space for Data Page.	Not enough memory to allocate a datapage to open an FCS file. Software exits.	None, message is informational.
This listmode file is corrupt and you are advised not to use it.	Opening a listmode file that is found to be corrupt.	Discard the listmode file.
Error saving to PDF file.	System error occurred when starting to print.	None, message is informational.
Can not retrieve offset <<offset>> parameter resolution	Failed to find resolution for plot scale.	Contact your local Beckman Coulter Representative.
Log Zero Gives Minus Infinity!!	Attempting to print a log scale of start value or end value of 0 on a log plot.	Switch to linear scale or edit log scale.
Couldn't allocate global memory for the histogram data.	System error could not allocate memory for plot.	Close any unnecessary applications or restart the software.
Couldn't allocate global memory for the histogram display.	System error could not allocate memory for plot.	Close any unnecessary applications or restart the software.
Couldn't allocate global memory for the complement histogram.	System error could not allocate memory for plot.	Close any unnecessary applications or restart the software.
Can not retrieve X parameter resolution.	Could not find the resolution in the FCS file.	Contact your local Beckman Coulter Representative.
GetOpenFileName returned Error #<<error-number>>	A system error occurred when opening a file.	Contact your local Beckman Coulter Representative.
GetSaveFileName returned Error #<<error-number>>	A system error occurred when writing a file.	Contact your local Beckman Coulter Representative.
Access Error: <<error-number>>	A system level error occurred appending to or reading a file.	Contact your local Beckman Coulter Representative.

Table 6.3 Software Messages *(Continued)*

Message	Cause	Action
The panel file <XYZ > does not exist.	The panel file requested in the EWL cannot be found in any of the search locations.	Ensure that the panel file is present in correct location
<<panel name>> is an Export Panel. Modifying an Export Panel may affect the Panel Report. You should re-validate the Panel Template after saving any changes to the Panel.	An existing export panel is being modified in Acq Manager by adding, deleting or reordering the protocols.	If Panel Reports are desired, save the export panel and validate the Panel Template prior to running the edited panel.
Unable to open Export file <DRIVE>:\Results.txt *Error:<Drive>:\Results.txt contains an invalid path.*	The Results.txt contains an invalid path (Path does not exist or is disconnected).	Exit CXP, Restore the Results Path / Drive, relaunch CXP and verify no red X appears next to the User's ID in the CXP Startup Wizard. If a red X is present, verify all Paths /Drives are restored. Refer to the CXP online Help: User Profile - Paths for additional information.

6.10 LEVEL SENSE INDICATORS

Sheath Low

When the **Sheath Low** indicator (see Figure 6.16) appears:

- During sample analysis, you have 5 minutes to finish analyzing the current sample.
- You cannot analyze samples or use the instrument until the sheath fluid container is filled.
- FILL THE SHEATH FLUID CONTAINER.

Figure 6.16 Sheath Low Indicators

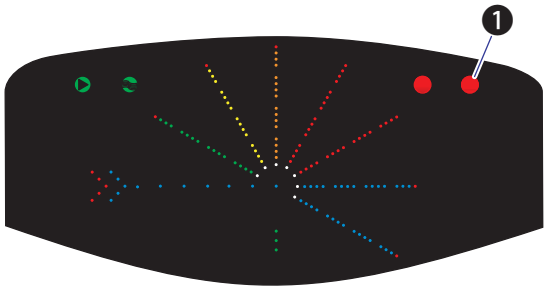

Waste Full

When the **Waste Full** indicator (see Figure 6.17) appears:

- During sample analysis, you have 5 minutes to finish analyzing the current sample.
- You cannot analyze samples or use the instrument until the waste container is emptied.
- EMPTY THE WASTE CONTAINER.

Figure 6.17 Waste Full Indicators

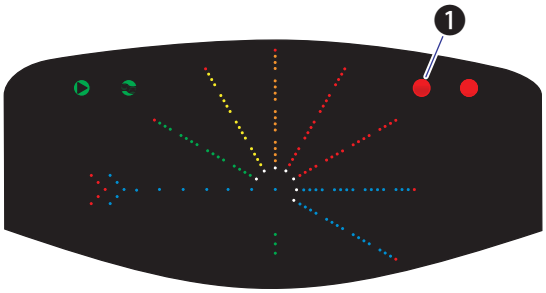

6.11 CYTOMETER CONTROL WINDOW CANNOT BE VIEWED

If the Cytometer Control window cannot be viewed (it is hidden behind the Windows Taskbar at the bottom of the screen), the Auto hide feature is currently selected. Change the Windows settings to deselect the Auto hide feature and keep the Cytometer Control window in view.

To deselect the Auto hide feature:

---

1 **Start ▸▸ Settings ▸▸ Taskbar & Start Menu….**



---

2 On the **General** tab, **Auto hide** and deselect **Always on top**.

OK.

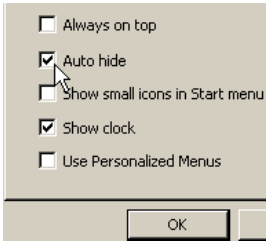

---

3 The Cytometer Control window should now be partially in view.



---

4 Drag the Cytometer Control window into full view.

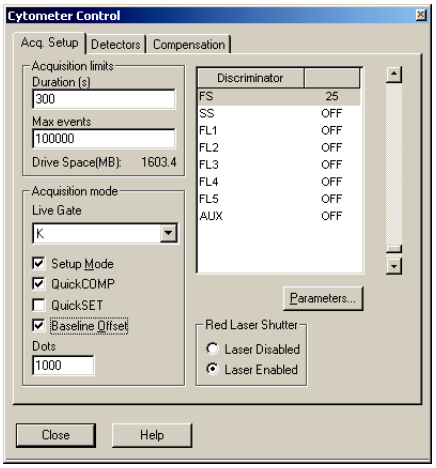

A.1 SOFTWARE PROCEDURES

For Online help, click on the links below to go to the detailed procedure.

These procedures are in the System Overview chapter in the Instructions For Use Manual.

- CREATING PROTOCOLS
- CREATING REGIONS
- CREATING GATES
- CREATING FLOWPAGES
- CREATING PANELS
- CREATING WORKLISTS

These procedures are in the Quality Control chapter in the Instructions For Use Manual.

- AutoSetup II Wizard
- Application Definition Wizard (define all your applications)
- AutoSetup Scheduler (multiple application AutoSetup)

These procedures are in the Using CXP Software chapter in the Reference Manual.

- Batch AutoMATOR
- Overlay Histogram Plots
- Advanced Color Precedence
- Listmode Compensation
- Setting a CAL Region

A.2 HARDWARE PROCEDURES

For Online help, click on the links below to:

- View a short video of the procedure or
- Go to the detailed procedure.

These procedures are in the Special Procedures Manual.

- Open/remove the instrument covers - video or procedure.
- Clean the MCL sample head and the sample probe - video or procedure.
- Replace the sample probe and sample pickup tubing - video or procedure.
- Replace the MCL sample head - video or procedure
- Replace the optical filter plate - video or procedure.
- Replace a filter in the optical filter plate - video or procedure

B.1 BAR CODE SAMPLE IDENTIFICATION

Bar code symbols are a highly accurate and efficient procedure for identifying and processing laboratory samples. Beckman Coulter instruments use four bar code symbologies (types) to identify specimens:

- Code 128
- Code 39®
- Codabar
- Interleaved 2-of-5.

The bar code reader senses the difference between enabled bar code symbologies in a run.

IMPORTANT A misread label can cause one sample ID to be read as another sample ID. The laboratory's process for printing, placing, and meeting all bar code specifications is important to achieve highly accurate reading. Follow the bar code specifications to avoid inaccurate reading of the bar code label.

Figure B.1 Bar Code Label



❶ Quiet zone

❷ Bar code symbol

❸ Sample ID

B.2 CORRECT PLACEMENT OF THE BAR CODE LABEL

The bar code label must be placed a minimum of 25.4 mm (1.0 in.) from the bottom of the tube. Refer to Figure B.2.

Figure B.2 Bar Code Label Placement

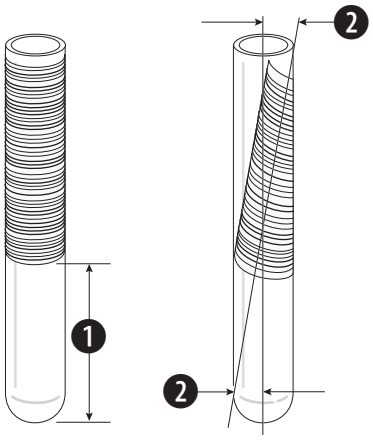

❶ 25.4 mm (1.0 in.) minimum

❷ 7.5 degrees

Put labels on the tubes so that the bars follow one another in a vertical sequence. Refer to Figure B.2. The bar code reader scans the tube vertically. Do not tilt the label more than ±7.5 degrees from the axis of the tube.

Put the tubes in the carousel so that the bar code symbols are visible through the slots in the front of the carousel. When viewed at eye level, the full symbol, including the quiet zones, must be visible through the slot and above the bottom of the carousel.

Note: The FC 500 rotates the tube as needed so the bar code label can be read.

B.3 BAR CODE LABEL SPECIFICATIONS

IMPORTANT A misread label can cause one sample ID to be read as another sample ID. The laboratory's process for printing, placing, and meeting all bar code specifications is important to achieve highly accurate reading. Follow the bar code label specifications to keep the rate of misread labels to a minimum.

The quality of the bar code symbol and the label is important for accurate reading. For high accuracy, use labels that meet all of the specifications.

When possible, print the sample ID on the label in alphanumeric characters so the operator can manually enter the bar code information if the bar code symbol cannot be read.

Label Size and Thickness

The length of the label must be less than 44.45 mm (1.75 in.). The label includes the bar code symbol and a minimum quiet zone of 3.5 mm (0.14 in.) at each end of the symbol. Refer to Figure B.3.

Figure B.3 Bar Code Label Specifications



❶ Quiet zones 3.5 mm (0.14 in.) minimum

❷ Bar code symbol height 19.05 mm (0.75 in.) minimum

❸ Bar code label length 44.45 mm (1.75 in.) maximum

The width of the bar code label must be 5 mm (0.2 in.) less than the circumference of the sample tube.

Label thickness, including adhesive, must be 0.09 mm (0.0036 in.) maximum. Total thickness for all labels and adhesives put together must be 0.36 mm (0.0144 in.) maximum.

Symbol Dimensions

The height of the bar code symbol must be 19.05 mm (0.75 in.) minimum.

See Table B.2, Code-Related Specifications.

Label and Print Quality

All bar code symbols must agree with the American Identification Manufacturer's (AIM) Uniform Symbology Specification.[1]

All bar code symbols must be printed at print quality class "B" or better as defined by the American National Standards Institute (ANSI).[2] Several factors affect print quality:

- Labels must be clean, not yellowed, and used before the expiration date.
- Print the bar code symbol on material that is reflective and has a matte finish. Use a background diffuse reflectance of 80% or more for maximum contrast.
- The labels must not have defects such as spots, lines, missing sections, cuts, folds, or density problems.
- The bars in the bar code symbol must be well defined. Edges must be constant (not irregular), so the bars and spaces have the correct widths for the bar code symbology used.

B.4 BAR CODE ERROR RATE

IMPORTANT A misread label can cause one sample ID to be read as another sample ID. Whenever possible use a bar code symbology and configuration choices that provide the most accurate bar code reading.

The quality of the bar code symbol and the label is important for accurate reading. To get the highest possible accuracy only use labels that meet all the specifications described for labels and symbols. Deviations from these specifications make the bar code more difficult to read and allow for a possible increase in the error rate.

The symbology and the configurable parameters that the laboratory selects have an effect on the error rate. Certain features of the symbologies and the selections made by the laboratory have an important effect on the accuracy of the bar code reading system. In general:

- Code 128 and Code 39 are more accurate and have lower error rates than Codabar or Interleaved 2-of-5.
- CLSI recommends Code 128 because of its accuracy, compact form, and self-checking capabilities.[3]
- A checksum greatly increases accuracy. Use a checksum with Interleaved 2-of-5 and Codabar because they are less accurate symbologies.
- Select the fixed length option, if available, because it is more accurate than the variable length option.
- To keep label and printing flaws to a minimum, use a narrow element of more than 0.25 mm (0.010 in.).

Beckman Coulter recommends the use of:

- **Code 128**
- **Checksum for all other symbologies**
- **Fixed length code symbols**
- **Narrow bar sizes of 0.25 mm (0.010 in.) minimum.**

B.5 BAR CODE SYMBOLOGIES

Beckman Coulter instruments use four bar code symbologies for specimen identification, see Table B.1.Within the given specifications, the MCL reader and the optional handheld bar code reader automatically distinguish the following bar codes:

Table B.1 Bar Code Symbologies

Bar Code Type	Description
Code 128 (also known as USD-6)	• Variable length • Alphanumerics; 107 character set • Self-checking • Continuous code; intercharacter space is part of code structure for higher density of code per square inch; compact bar code • Code 128 is recommended by the Clinical and Laboratories Standards Institute (CLSI) for its accuracy, compact form, and self-checking capabilities[3] • Code 128B - Maximum 8 / minimum 3 alphanumeric characters • Code 128C - Maximum 16 / minimum 3 numeric characters (The use of 15 numeric characters is invalid.)
Code 39 (also known as 3-of-9 and USD-3)	• Variable length • Includes 43 data characters; 26 letters (uppercase A-Z), 10 digits (0-9), six symbols (. $ / + % -) and a space • Strong self-checking properties • Checksum • Discrete code; white spaces are not part of this code • Maximum 7 characters (6 data characters + 1 checksum character).
Interleaved 2-of-5 (also known as I2 of 5, USD-1, and USD-1.25)	• Numerics only • Checksum • Lower density of code per square inch; longer label • Requires an even number of digits to be encoded, a leading “0” must be added if the number count is odd • Fixed 14 characters (13 data characters + 1 checksum character).
Codabar (also known as USD-4 and NW7)	• Variable length • Includes 16 data characters; 10 digits (0-9), and six symbols (. $ / + % -) • Has specific start and stop characters which lead to improvement in readability • Checksum • Lower density of code per square inch; longer bar code • Maximum 10 characters (9 data characters + 1 checksum character).

B.6 BAR CODE LABLES

A bar code consists of black lines (bars) and white lines (spaces), which are called elements.

There are narrow elements (NE) and wide elements (WE). The bar code symbology determines their arrangement.

IMPORTANT Sample misidentification can occur from the use of incorrect, poor quality, damaged, dirty or improperly placed bar code labels. Follow the specifications in this section to create your bar code labels to prevent incorrect sample identification. See also Putting a Bar Code Label on a Sample Tube.

The instrument supports preprinted labels.

Bar Code Label Optical Characteristics at 670 nm ±10%

- Print Contrast Signal (PCS): 80% minimum.
- Reflectivity of Media (RW): 80% minimum.
- Reflectivity of Ink (RB): 16% maximum.
- No spots or voids; no ink smearing.
- Edge roughness is included in the bar and space tolerances.

$$PCS = \frac{RW + RB}{RW} \times 100\%$$

Table B.2 Code-Related Specifications

Code	Interleaved 2-of-5*	Codabar*	Code 39*	Code 128*
Narrow element (NE) width	0.010 in. ±0.001	0.010 in. ±0.001	0.010 in. ±0.001	0.010 in. ±0.001
Wide element/narrow element ratio (WE/NE)	3:1	N/A	3:1	N/A
Intercharacter gap	No	0.010 in. minimum	_NE	No
Data digits	14**	1 to 10**	1 to 7**	2 to 16

* See AIM Uniform Symbology Specification, Rev. 1995 for detailed specification.
** Includes checksum character

B.7 MCL BAR CODE READER

The MCL uses a visible-laser type reader containing a Class II laser, operating at 670 nm, with a maximum power output of 1 mW.

B.8 BAR CODE DECODER

The MCL sends a "GS" ASCII character (hexadecimal 1D) to the decoder to start operation.

The decoder:

- Turns the reader on.
- Decodes information that comes from the reader.
- Keeps the reader on for up to 4 seconds.
- Turns the reader off.
- Sends the decoded information (or no-read message) to the MCL.

IMPORTANT To prevent incorrect identification of sample tubes, do not use FNC1, FNC4, and FS (hexadecimal 1C) characters in your bar code information.

B.9 CHECKSUM ALGORITHM

Beckman Coulter strongly recommends the use of bar code checksums to provide automatic checks for read accuracy.

IMPORTANT Use of bar codes is an extremely accurate and effective method of positive patient identification. Certain features, such as checksum digits, maximize accuracy in reading Codabar, Code 39 and Interleaved 2-of-5 labels. In one study, the use of checksum digits detected 97% of misread errors.

Use checksums to provide protection against occasional misread errors caused by problems such as damaged or misapplied labels. If you must use bar codes without checksums, Beckman Coulter recommends that you verify each bar code reading to assure correct patient identification.

REFERENCES

1. American Identification Manufacturer's group (AIM), U*niform Symbology Specifications Code 39, Interleaved 2 of 5, Codabar,* and *International Symbology Specifications Code 128.* ANSI/AIM BC1, BC2, BC3, BC4, 1995. http://www.aimusa.org

2. American National Standards Institute (ANSI) *Bar Code Print Quality Guidelines.* X3. 182-1990 (R2000). http://www.ansi.org

3. Clinical and Laboratories Standards Institute (CLSI), *Laboratory Automation: Bar Codes for Specimen Container Identification; Approved Standard.* AUTO2-A2 (ISBN 1-56238-589-5). http://www.clsi.org/source/orders/free/auto2-a2f.pdf

Numerics

3D acceleration
  setting needed on video card, 1-12
3dfx voodoo based video cards
  setting needed for 3D acceleration, 1-12
3-of-9
  bar-code, B-5
488 DL filter
  used to separate SS, 5-6
  See also filters
500 LP filter
  used to block laser light, 5-9
  See also filters

A

about help
  lists CXP software build number, 1-39
absolute counts
  use Flow-Count fluorospheres, 3-3
access door, tube
  location, 4-11
access error...error-number, 6-28
Acquiring
  appears during sample cycle, 4-5, 4-8, 4-11
acquisition
  monitor with events/sec counter, 4-5, 4-8, 4-12
  running samples in the automatic mode, 4-3
  running samples in the manual mode, 4-6
  running samples in the single tube mode, 4-10
acquisition manager
  drag and drop functions, 1-18
  enter the carousel ID number, 4-5, 4-7
  skip tubes in carousel, 1-14
  toolbar
    external worklist files (EWL), 1-37
    worklist panel, 1-37
    worklist test, 1-37
Action log sheet
  record cleaning, 2-11
  record daily shutdown actions, 2-11
  record startup checks, 2-7
adjust
  color compensation, 3-3
  gain, 3-3
  high voltage, 3-3
  system pressure, 2-6
  See also adjustment procedures
adjustment procedures
  schedule, 6-12
  system pressure, 2-6
air filter
  daily check, 2-6
  when to contact service, 2-6
alignment
  verify, 3-3
amplification
  description, 5-12
an error occurred during creation of the remote profiles, 6-24
an unexpected error has occurred in the autosetup module, 6-23
an unspecified error occurred, 6-23
an unspecified error occurred when creating/modifying the user details, 6-24
an unspecified error occurred while reading the QC product file, 6-24
an unspecified file error occurred while reading the clinical panel file from disk, 6-25
an unspecified file error occurred while writing the clinical panel file to disk, 6-25
an unspecified file error occurred while writing the instrument installation file to disk, 6-27
an unspecified file error occurred while writing the patient export file to disk, 6-25
an unspecified file error occurred while writing the QC export file to disk, 6-24
APC
  See also Flow-Check 675 and Flow-Set 675 fluorospheres
application
  control, verify, 3-3
  list, for the instrument, 1-1
application definition
  wizard, 3-14
Application mismatch problem - aborting, 6-27
Argon laser
  description of how its light is handled, 5-9
  illustration, 5-5
  laser labels, 6-5
  ON indicator, 1-4
  See also laser
ATTENTION: results for this sample are valid, however the tube may have been diluted post analysis and should not be re-run, 6-27
auto adjust disabled
  use when running a negative control, 3-10
auto mode
  See automatic mode

auto shutdown
how to set up, 2-14
auto startup
how to set up, 2-14
AutoGate region
convert from a polygonal region, 1-31
creating, 1-29
stop count on plot, 1-29
automated software
features, 5-14
automatic
mode, running, 4-3
automatic gate creation, 1-31
automatic mode
running samples, 4-3
AutoMATOR
setup
drag and drop functions, 1-18
AutoSetup
compensation tubes, 3-5
panels
controls used, 3-3
prepare for, 3-4
running a negative control, 3-10
verification tubes, 3-5
wizard, running, 3-8
autosetup
scheduler, 3-6
wizard
AutoSetupII
save settings, 3-13
autostandardization
See AutoSetup II
AUX parameter
description, 5-14
display indicator, 1-5
not available with FL5, 5-14
when to use, 5-14
Awaiting Sample
appears during sample cycle, 4-5, 4-8, 4-11
appears during startup cycle, 2-5
run fluorospheres, 3-8

B

bad data pointers!, 6-28
bar code
3-of-9, B-5
acceptable, B-5
Codabar, B-5
Code 128, B-5
Code 39, B-5
NW7, B-5
USD-3, B-5
USD-4, B-5
USD-6, B-5
bar code decoder
description, B-7
bar code labels
basic operating techniques, 1-13
correct placement, B-2
label quality, B-3
label size, B-3
optical characteristics, B-6
orientation in carousel, 1-14
print quality, B-3
thickness, B-3
types read by the MCL, B-5
used on sample carousel, 5-1
bar code reader
acceptable bar codes, B-5
laser labels, 6-9
MCL, specifications, B-6
bar-code
error rate, B-4
I2-of-5, B-5
Interleaved 2-of-5, B-5
specifications, B-1
symbologies, B-5
USD-1, B-5
USD-1.25, B-5
use of checksum, B-7
bar-code labels
labeling sample tubes, 1-13
specifications, B-2, B-6
symbol dimensions, B-3
baseline offset - not available, 6-23
basic operating techniques, 1-13
beads
See fluorospheres
beam shaping
laser, 5-3
bleach
used in shutdown cleaning, 2-11
blood
run as a control, 3-3
blue laser
See Argon laser
buttons

Taskbar, 1-8
See also icons, Start button

C

calculating
compensation coefficients, 3-11
can not retrieve offset parameter resolution, 6-28
can not retrieve parameter resolution, 6-27
can not retrieve x parameter resolution., 6-28
can't browse!!, 6-26
cannot create patient export plot image file, 6-25
carousel overflow, 6-26
carousel, sample
bar code labels, 5-1
description, 5-1
home position, 1-14
loading sample tubes, 1-14
position 10 used for single tube mode, 4-11
putting a carousel in the MCL, 1-14
removing a carousel from the MCL, 1-15
See also MCL
carry
regions from previous protocol, 1-35
CDRH
required labels, 6-1
cell illumination
description, 5-4
characteristics, performance, 1-40
check
air filter, 2-6
pressure gauge, 2-6
vacuum filter, 2-6
vacuum gauge, 2-6
vacuum trap, 2-7
water trap, 2-6
checksum algorithm
Codabar, B-7
Code 39, B-7
Interleaved 2-of-5, B-7
cleaning
schedule, 6-12
cleaning agent
check level at startup, 2-3
container, when to clean, 6-12
cleaning procedures
schedule, 6-12
surface areas during shutdown, 2-11
Cleanse Level Error, 6-17
Cleanse Level Warning, 6-17
Codabar
bar code, B-5
Codabar bar code
checksum algorithm, B-7
Code 128
bar code, B-5
Code 39
bar code, B-5
Code 39 bar code
checksum algorithm, B-7
coefficients
calculating compensation, 3-11
COleDispatchException. SCODE: error-code description: error-code-description, 6-25
COleException. SCODE: error-code, 6-25
color compensation
adjust, 3-3
calculating coefficients, 3-11
color resolution
how to set, 1-12
monitor, 1-12
compensation
calculating coefficients, 3-11
See also color compensation
compensation coefficients
compensation tubes, 3-11
verification tubes, 3-12
compensation tubes
AutoSetup, 3-5
prepare, 3-5
process, 3-11
used to calculate compensation coefficients, 3-11
computer
front view, 1-7
configuration, filter
second laser option, 5-8
Control Panel
description, 1-10
how to access, 1-10
illustration, 1-10
Windows, 1-10
controls
and indicators, Cytometer, 1-3
for AutoSetup panels, 3-3
prepare for AutoSetup, 3-4
QC processes used for, 3-3
running, 3-1
running AutoSetup, 3-8
running Flow-Check, 3-4

whole blood, 3-3
See also individual QC material names
conventions
used in the manual, xiv
correct settings
verify, 3-3
could not build the in-memory directories list, 6-24
could not write the directories locations to disk, 6-25
couldn't allocate enough memory space for data page, 6-28
couldn't allocate enough memory space for data store, 6-28
couldn't allocate enough memory space for meta data, 6-28
couldn't allocate global memory for the complement histogram, 6-28
couldn't allocate global memory for the histogram data, 6-28
couldn't allocate global memory for the histogram display, 6-28
createimagebitmap call failed, 6-27
createimagebitmap- render call failed, 6-27
creating
AutoGate regions, 1-29
FlowPAGE, 1-32
linear regions, 1-27
multiple linear regions, 1-28
polygonal regions, 1-22
quadrant regions, 1-25
rectangular regions, 1-24
critical error reading file, 6-26
critical error writing file, 6-25
cross-cylindrical lenses
beam shaping, 5-3
CV
formula, 5-18
CXP software
automated features, 5-14
build number, 1-39
shortcuts, 1-16
shortcuts on Start button menu, 1-8
signing on, 2-5
version information, 1-39
where error messages appear, 6-13
See also software
Cyto-Comp Cells
QC process used for, 3-3
See also controls
Cytometer
auto shutdown, 2-14
auto startup, 2-14
controls and indicators, 1-3
front view, 1-3
indicator panels, 1-4
laser labels, 6-2, 6-3, 6-4, 6-7
ready and laser on indicators, 1-4
sample flow rate indicators, 1-5
sensors, 5-10
signal amplitude indicators, 1-5
when to shutdown, 2-8
Cytometer Auto Startup, 2-14
Cytometer Control
drag and drop functions, 1-18
Cytometer Status Window
description, 6-13
illustration, 6-13
See also error messages
cytometer.log file
description, 6-15
illustration, 6-14
See also error messages
cytometerarchive.log file
description, 6-16
See also error messages
cytosettings not in acceptable format, 6-27
Cyto-Trol Control Cells
QC process used for, 3-3
See also controls

D

daily procedures
before you begin, 2-1
Printer checks, 2-8
QC procedures, 3-4
record shutdown and cleaning, 2-11
record startup checks, 2-7
set up auto shutdown, 2-14
set up auto startup, 2-14
shutdown, 2-8
startup, 2-2
startup procedure, 2-2
daily startup
before you begin, 2-1
See also startup
data exception occured, 6-27
Data Rate Warning, 6-17
data storage
description, 5-17

Data Stream Warning, 6-17
delete
  Recycle Bin, 1-9
Desktop
  Windows, 1-8
Desktop Menu Bar
  illustration, 1-8
dialog box
  description, xv
dichroic filters
  See filters
display panel
  flow rate indicators, 1-5
  illustration, 1-4
  laser on indicator, 1-4
  ready indicator, 1-4
  signal amplitude indicators, 1-5
documentation for your instrument
  about your instructions for use manual, xiii
  conventions used, xiv
  introduction to your manuals, xiii
  using the manuals, xiii
Documents
  Windows, 1-9
door, tube access
  location, 4-11
doublet discrimination
  use the AUX parameter, 5-14
drag and drop
  acquisition manager, functions available, 1-18
  AutoMATOR Setup, functions available, 1-18
  Cytometer Control, functions available, 1-18
  description, 1-18
  Modify Color Precedence, functions available, 1-18
  plots, functions available, 1-18
  Protocol Explorer, functions available, 1-18
  resource explorer, functions available, 1-18
  Tile Special, functions available, 1-18

E

edit
  quadrant region, re-position, 1-26
edit products, 3-18
electrical input, 5-8
equations
  See formulas
error - failed to set user login in exivd, 6-23
error - failed to set user logoff in exivd, 6-24
error creating directory name, 6-24
error invalid file, 6-25
error messages
  CXP software screen, 6-13
  Cytometer Status Window, 6-13
  cytometer.log, description, 6-15
  cytometerarchive.log file, 6-16
  description, 6-13
  how to clear, 6-13
  list of, 6-17
  record in instrument logbook, 3-8
  where displayed, 6-13
  table
    See also software messages
error out of memory, 6-25
error processing listmode data, 6-23
error reading archive file, 6-26
error reading file, 6-26
error reading QC file, 6-26
error saving to pdf file, 6-28
error writing archive file, 6-25
error writing file, 6-25
ethanol
  used in shutdown cleaning, 2-11
Events/Sec counter
  use to monitor acquisition, 4-5, 4-8, 4-12
export data
  QC data, 3-6

F

failed to create empty document, 6-28
FC 500
  basic operating techniques, 1-13
  controls and indicators, 1-3
  do not transfer settings files, 3-13
  illustration, 1-3
  intended use, 1-1
  manuals, hard-copy, xiii
  purpose, 1-1
  specifications, 4-1
  warm-up time, 2-5, 3-8
  See also system
field stop
  angles of FS it collects, 5-4
  factory setting, 5-4
filter configuration
  second laser option, 5-8
filters
  488 DL, function, 5-6

500 LP, function, 5-9
air, location, 2-6
air, when to clean, 6-12
configuration, four FL sensors, 5-7
daily check at startup, 2-6
dichroic, function, 5-9
long pass (LP), function, 5-9
spatial, function, 5-6
FL
See fluorescent light (FL)
flow cell
how to avoid clogging, 4-3, 4-6, 4-10
hydrodynamic focusing, 5-1
illustration, 5-2
flow rate
sample, indicators, 1-5
Flow-Check 675 fluorospheres
chart for applications, 3-4
QC procedure, 3-4
QC process used for, 3-3
See also controls
Flow-Check 770 fluorospheres
chart for applications, 3-4
QC procedure, 3-4
QC process used for, 3-3
See also controls
Flow-Check fluorospheres
chart for applications, 3-4
QC procedure, 3-4
QC process used for, 3-3
See also controls
FlowPAGE
creating, 1-32
delete, 1-33
example, 1-32
Flow-Set 675 fluorospheres
chart for applications, 3-5
QC process used for, 3-3
See also controls
Flow-Set 770 fluorospheres
chart for applications, 3-5
QC process used for, 3-3
See also controls
Flow-Set fluorospheres
chart for applications, 3-5
QC process used for, 3-3
See also controls
fluidics systems
check stability, 3-4
verify, 3-3
fluorescence
intensity determines peak pulse height, 5-10
fluorescent light (FL)
cell illumination, 5-4
collection, 5-6
indicators, 1-5
when to use, example, 5-4
fluorochrome
prepare compensation tube for each, 3-5
fluorospheres
prepare for AutoSetup, 3-4
prepare per package inserts, 3-4, 3-5, 3-8, 3-14
re-establish ranges with new lot, 3-1
running AutoSetup, 3-8
running Flow-Check, 3-4
usage chart, 3-4, 3-5
See also individual names of fluorospheres
focusing, hydrodynamic
description, 5-1
formulas
CV, 5-18
linear region statistics, 5-18
mean, 5-18
RATIO parameter, 5-15
SD (standard deviation), 5-18
forward scatter (FS)
cell illumination, 5-4
display indicator, 1-4
light collection, 5-4
sensor, 5-4
FS
See forward scatter

G

gain
adjust, 3-3
run AutoSetup to set, 3-5
gating
description, 5-17
gauges
system vacuum, 2-6
general exception caught, 6-26
generated signals
description, 5-13
getopenfilename returned error #error-number, 6-28
getsavefilename returned error #error-number, 6-28
graphics
for illustration only, xv

ground
user, if static charge exists, 2-1

H

hazards
radiation exposure, 6-1
Helium Neon laser
See HeNe laser
help
about, 1-39
about, select, 1-39
accessing, 1-38
how to use, 1-39
illustration of layout, 1-39
using the online Help system, 1-38
Help Menu, 1-39
HeNe laser
description of how its light is handled, 5-9
illustration, 5-5
laser labels, 6-6, 6-7
shutter open indicator, 1-4
See also laser
high voltages
adjust, 3-3
run AutoSetup to set, 3-5
See also voltages
histogram
statistics, 5-18
types of display, 5-15
See also plots
home position
sample carousel, 1-14
Host Command Invalid, 6-17
hot keys
See keyboard shortcuts
hydrodynamic focusing
description, 5-1

I

I2-of-5
bar-code, B-5
icons
control panel, 1-10
my computer, 1-10
taskbar, 1-8
See also buttons, Toolbar buttons
idle
Cytometer, perform prime cycle before running samples, 4-2
Immuno-Brite fluorospheres
QC process used for, 3-3
See also controls
Immuno-Trol Cells
QC process used for, 3-3
See also controls
Immuno-Trol Low Cells
QC process used for, 3-3
See also controls
Incorrect Cytometer Serial Number
appears when transfer instrument settings, 3-13
incorrect cytometer serial number, 6-28
incorrect cytosettings found in protocol, 6-27
indicator panels
Cytometer, 1-4
indicators
Cytometer ready, 1-4
laser on, 1-4
level sense, 1-6, 6-30
sample flow rate, 1-5
sheath flow, 1-6
sheath low, 1-6, 6-30
signal amplitude, 1-5
waste full, 1-6, 6-30
Initialization
appears during startup cycle, 2-5
instructions for use manual
information organization, xiii
using the manual, xiii
instrument
do not transfer settings files, 3-13
optical system, 5-5
insufficient memory, 6-23
intended use of the instrument, 1-1
Interleaved 2-of-5
bar-code, B-5
Interleaved 2-of-5 bar code
checksum algorithm, B-7
introduction to your manuals, xiii
invalid file length or not a QC file, 6-26

K

keyboard
shortcuts, 1-17
use to select software commands, xv

L

labels
  bar code, specifications, B-6
  CDRH-required, 6-1
  disposal of electrical instrumentation, warning, 6-11
  laser, warning, 6-1
  RoHS caution, 6-11
  RoHS environmental, 6-11
  universal power supply, warning, 6-10
  See also bar-code labels
labels, bar-code
  See bar-code labels
laboratory's ranges
  when to re-establish, 3-1
laser
  bar code reader, MCL, B-6
  beam shaping, 5-3
  blue, *See* Argon laser
  red, *See* solid-state laser or HeNe laser
  re-establish ranges when realigned, 3-1
  re-establish ranges when replaced, 3-1
  safety, 6-1
  warning labels, 6-1
Laser Current Error, 6-17
laser option, second, 5-8
Laser Power Error, 6-17
Laser Regulation Warning, 6-17
Laser Start Error, 6-17
layout
  help window, 1-39
lenses
  beam shaping, 5-3
  cross-cylindrical, 5-3
level sense and flow indicators, 1-6
level sense indicators, 6-30
  sheath low, 6-30
  waste full, 6-30
light collection, separation and measurement
  description, 5-4
light scatter
  intensity determines peak pulse height, 5-10
lights
  See indicators
linear region
  creating, 1-27
  See also regions
linearity
  monitor instrument, 3-3
lin-log
  mean method, 5-20
listmode
  description, 5-17
log on
  instructions, 2-4
  Windows screen, 2-4
log zero gives minus infinity !!, 6-28
log-log
  mean method, 5-19
long pass (LP) filters
  function, 5-9

M

Maintenance Log
  record cleaning, 2-11
  record daily shutdown, 2-11
  record startup checks, 2-7
manual mode
  edit sample ID, 4-7
  enter tube location, 4-8
  how to select, 4-8
  running samples, 4-6
manual, updates, iii
manuals for your instrument
  about your instructions for use manual, xiii
  conventions used, xiv
  how to use, xiii
  introduction to your manuals, xiii
  using the manuals, xiii
MCL (Multi-Tube Carousel Loader)
  check vortex function, 2-8
  do not open while moving, 4-6
  illustration, 1-6
  laser labels, 6-8, 6-9
  loading the sample, 5-1
  putting a carousel in the MCL, 1-14
  removing a carousel from the MCL, 1-15
  tube access door, 4-10
  using carousels, 1-13
  See also sample carousel and carousel, sample
MCL automatic mode
  See automatic mode
MCL Carousel In/Out Error, 6-18
MCL Carousel Label Error, 6-18
MCL Carousel Rotate Error, 6-18
MCL CPU Error, 6-18
MCL Door Open Error, 6-18
MCL Door Open Warning, 6-18

MCL EPROM Error, 6-18
MCL Error, 6-18
MCL Interlock Error, 6-18
MCL manual mode
  See manual mode
MCL Parallel Recv Error, 6-18
MCL Parallel Send Error, 6-18
MCL Probe Up/Down error, 6-18
MCL Program Load Error, 6-18
MCL RAM Error, 6-18
MCL Rec from Fault Error, 6-18
MCL Receive Timeout Error, 6-19
MCL Request Error, 6-19
MCL sample head
  when to clean, 6-12
MCL Serial 1 Recv Error, 6-19
MCL Serial 1 Send Error, 6-19
MCL Serial 2 Recv Error, 6-19
MCL Serial 2 Send Error, 6-19
MCL Transmit Timeout Error, 6-19
MCL Tube Displaced Error, 6-19
MCL Tube Jam Error, 6-19
MCL Tube Load Error, 6-19
MCL Tube Position Error, 6-19
MCL Tube Up/Down Error, 6-19
mean
  formula, 5-18
  lin-log method, 5-20
  log-log method, 5-19
mean position
  ascertain target, 3-3
messages
  error, description, 6-13
  error, log, 6-15
  error, where displayed, 6-13
mismatched IDs, 4-5, 4-8, 4-12
mode
  automatic, 4-3
  definition, 5-18
  manual, 4-6
  single tube mode, 4-10
Modify Color Precedence
  drag and drop functions, 1-18
monitor
  color resolution, 1-12
  front view, 1-7
  instrument linearity, 3-3
mouse
  using, 1-11
multiple linear regions
  creating, 1-28
My Computer
  Windows, 1-10

N

navigation pane
  illustration, 1-39
  location, 1-39
negative control
  additional steps in AutoSetup wizard, 3-10
  running, 3-10
network
  log in at startup, 2-4
  search for files, folders, and computers, 1-9
new panel
  carry regions from previous protocol, 1-35
  use instrument settings, 1-35
  use instrument settings from external file, 1-35
  use instrument settings from previous test, 1-35
  use plots and gates from protocol, 1-35
  use regions from protocol, 1-35
  use regions from this protocol, 1-35
new panel wizard
  See panel wizard
not a valid worklist file, 6-26
NW7
  bar code, B-5

O

online Help
  See help
opening a protocol will clear the acquisition history in the worklist, 6-27
operation
  principles of, 5-1
optical
  system, 5-5
  systems, check stability, 3-4
optical area
  laser labels, 6-3, 6-4
optical characteristics
  bar-code labels, B-6
  for bar-code labels, B-6
optical filter plate
  description, 5-9
  filter configuration dual laser, 5-7
  filter configuration single laser, 5-6

P

package inserts
contain fluorospheres instructions, 3-4, 3-5
reagent, use to prepare samples, 4-3, 4-6, 4-10
use to establish expected ranges, 3-8
use to establish normal ranges, 3-1
use to establish target channels, 3-8, 3-14
use to prepare CYTO-TROL cells, 3-5
use to prepare Immuno-Trol cells, 3-5
panel name is an export panel. modifying an export panel may affect the panel report., 6-29
panel report
generate, 1-34
panel wizard
create new panels, 1-33
panels
can skip tubes between panels, 1-14
cleanse panel, description, 5-14
creating, 1-33
do not skip tubes within panel, 1-14
how to select, 4-4, 4-7, 4-10
new, 1-33
panel wizard, 1-33
QC, need unique protocols, 3-17
special, 5-13
what to do if there is a deleted protocol, 4-4, 4-7, 4-10
See also new panel
parameters
AUX, 5-14
description, 5-14
names, 1-35
RATIO, 5-15
run AutoSetup to set gains, 3-5
TIME, 5-15
parameters selected on cytometer do no match parameters displayed in plots, 6-26
passwords
enter at log on, 2-4
for auto startup/shutdown, 2-14
PC7
See also Flow-Check 770 and Flow-Set 770 fluorospheres
peak signal
description, 5-10
See also signals
performance characteristics, 1-40
phenotype
definition, 5-16
photo sensors
See sensors
pickup lens/spacial filter assembly
function, 5-6
plots
drag and drop function, 1-18
PRISM, 5-16
PRISM, illustration, 5-16
types of display, 5-15
See also histograms, color dot plots, contour plots, density plots, dot plots, histogram plots and prism plots
PMT
re-establish ranges when replaced, 3-1
See also high voltages
polygonal region
convert to an AutoGate region, 1-31
creating, 1-22
See also regions
position 10
used for single tube mode, 4-11
power failure
how to handle samples, 4-2
Power Supply
front view, 1-7
universal, 1-7
universal, warning labels, 6-10
voltage-specific, 1-7
precautions
against radiation, 6-1
Preparing Auto Setup Reagents, 3-4
Preparing Sample
appears during sample cycle, 4-5, 4-8, 4-11
prime cycle
included in startup cycle, 2-5
when to request, 4-2
principles of operation, 5-1
Printer
daily checks, 2-8
operating instructions, 1-7
printer setup file contains errors, 6-25
PRISM
description, 5-16
plot, 5-16
signals that can be assigned to it, 5-16
when to use, 5-16
Programs
Windows, 1-9
Protocol Explorer

drag and drop functions, 1-18
protocols
AS, description, 5-13
cleanse bleach.pro, 5-14
cleanse di water.pro, 5-14
Cleanse, description, 5-13
creating, 1-19
definition, 5-13
description, 5-13
drag and drop function, 1-18
how to select, 4-4, 4-7, 4-10
information contained, 5-13
new, 1-19
QC, description, 5-13
special, 5-13
used in Auto Setup panels, 5-13
what to do if there is a deleted protocol in a panel, 4-4, 4-7, 4-10
See also new protocol
Publish Data to MS Excel
use for Levey Jennings plots, 5-13
pulse
See signals

Q

QC materials
QC processes used for, 3-3
See also quality control (QC)
quadrant region
creating, 1-25
editing, re-position, 1-26
See also regions
quality control (QC), 3-1
about, 3-1
assigning QC products, 3-20
autosetup scheduler, 3-6
autosetup wizard
check specific applications, 3-1
daily procedures, 3-4
edit products, 3-18
export QC data to spreadsheet, 3-6
Flow-Check fluorospheres, 3-4
Flow-Set fluorospheres, 3-5
products, 3-18
QC materials used for QC process, 3-3
QC processes, 3-3
review results, 3-21
setting up QC products, 3-18

R

radiation hazards, 6-1
ranges, laboratory's
establish expected ranges, 3-8
when to re-establish, 3-1
RATIO parameter
description, 5-15
formula, 5-15
reagents
check level at startup, 2-3
record
cleaning, 2-11
daily shutdown, 2-11
startup checks, 2-7
rectangular region
creating, 1-24
See also regions and quadrant region
Recycle Bin
Windows, 1-9
red laser
See solid-state laser or HeNe laser
region region-name
Autogating.DLL failed, 6-24
peak search result is outside travel range, 6-24
regions
AutoGate, 1-29
carry from previous protocol, 1-35
creating
AutoGate region, 1-29
linear region, 1-27
multiple linear regions, 1-28
polygonal region, 1-22
quadrant region, 1-25
rectangular region, 1-24
description, 5-17
linear region, 1-27
multiple linear regions, 1-28
polygonal region, 1-22
quadrant region, 1-25
re-position, 1-26
rectangular region, 1-24
types, 5-17
types of functions, 5-17
replacement procedures
schedule, 6-12
reporting units
shown in US unit format, xv
requirements, sample, 4-1
resolution

set color monitor, 1-12
resource explorer
drag and drop functions, 1-18
results
review QC results, 3-21
RoHS
caution label, 6-11
environmental label, 6-11
Romlock
number on Romlock, 1-39
Run
Windows, 1-9
running
application definition wizard, 3-14
autosetup wizard
Flow-Check fluorospheres, 3-4
Flow-Set fluorospheres, 3-5
samples in MCL automatic mode, 4-3
samples in MCL manual mode, 4-6
samples in single tube mode, 4-10

S

safety precautions
laser, 6-1
sample
checks before running, 4-1
flow, description, 5-1
how to handle after power failure, 4-2
illuminated in the flow cell, 5-4
loading, automated, 5-1
measurable cell sizes, 4-1
optimum concentration, 4-1
preparation, 4-1
prepare per reagent package insert, 4-3, 4-6, 4-10
requirements, 4-1
risk of misidentification, 4-2
run samples in MCL automatic mode, 4-3
run samples in MCL manual mode, 4-6
run samples in single tube mode, 4-10
verify manually entered information before reporting results, 4-5, 4-9, 4-12
sample carousel
bar code labels, 5-1
description, 5-1
enter the ID number, 4-5, 4-7
home position, 1-14
putting a carousel in the MCL, 1-14
removing a carousel from the MCL, 1-15
See also carousel, sample and MCL
sample flow
description, 5-1
rate indicators, 1-5
sample ID
can edit after each tube in manual mode, 4-6
can edit after each tube in single tube mode, 4-10
stop each tube so you can edit in manual mode, 4-7
stop each tube so you can edit in single tube mode, 4-10
Sample Pressure Error, 6-19
sample probe
how to avoid clogging, 4-3, 4-6, 4-10
when to clean, 6-12
sample tube
See test tube
sample tubing
how to avoid clogging, 4-3, 4-6, 4-10
sampling system
when to clean, 6-12
schedule
adjustment procedures, 6-12
auto shutdown, 2-15
auto startup, 2-15
cleaning, 6-12
replacement, 6-12
SD (standard deviation)
formula, 5-18
Search
Windows, 1-9
second laser option, 5-8
security
Windows 2000 password, 1-8
sensing compartment
laser labels, 6-2
sensors
Cytometer, 5-10
Sensors Stream Warning, 6-19
set admin password in exivd returned -1, 6-23
set user logoff in exivd returned -1, 6-23
set user logon in exivd returned -1, 6-23
settings
do not transfer files between instruments, 3-13
save from AutoSetupII, 3-13
Windows, 1-9
Sheath Drawer Error, 6-20
sheath fluid
flow indicator, 1-6

low indicator, 1-6, 6-30
sheath fluid container
when to clean, 6-12
sheath fluid flow indicator
location, 1-6
Sheath Level Error, 6-20
Sheath Level Warning, 6-20
sheath low indicator
description, 6-30
location, 1-6, 6-30
Sheath Pressure Error, 6-20
shortcuts, software, 1-16
drag and drop, 1-18
keyboard, 1-17
Shut Down
Windows, 1-9
shutdown
daily shutdown, 2-8
extended, procedure, 2-12
how to set up auto shutdown, 2-14
minimum time, 2-8
when to shut down the Cytometer, 2-8
side scatter (SS)
cell illumination, 5-4
collection, 5-6
sensor, 5-6
when to use, example, 5-4
signal amplitude indicators, 1-5
signals
amplification, 5-12
generated, 5-13
integral, description, 5-12
integral, illustration, 5-12
integral, types, 5-13
peak, description, 5-10
peak, illustration, 5-11, 5-12
processing of, operation principles, 5-10
voltage pulse, 5-10
signing on to CXP software, 2-5
single tube mode
edit sample ID, 4-10
how to request, 4-11
running samples, 4-10
uses position 10 in carousel, 4-11
skip positions
between panels, 1-14
not within a panel, 1-14
software
online help system, 1-38
shortcuts, 1-16
signing on to CXP software, 2-5
software messages
list of, 6-23
table
See also error messages
solid-state laser
illustration, 5-5
laser labels, 6-5, 6-6
See also laser
spatial filter
See filters
special panels, 5-14
special protocols, 5-13
specifications
bar-code labels, B-2, B-6
specimen
See sample
spreadsheet
export QC data, 3-6
SS
See side scatter
stability
check fluidics systems, 3-4
check optical systems, 3-4
stains
compensation tubes, 3-5
verification tube, 3-5
Start button
description, 1-8
menu, illustration, 1-8
Windows, 1-8
starter kit
MCL supplies, 1-13
startup
before you begin, 2-1
daily procedure, 2-2
daily startup, 2-2
how to set up auto startup, 2-14
log into network, 2-4
record daily checks, 2-7
Startup in Process
appears during startup cycle, 2-5
State Machine Failure, 6-20
static charge
user needs to be grounded, 2-1
statistics
histogram, 5-18
linear region, 5-18
log region, 5-19
status messages

running fluorospheres, 3-8
sample cycle messages, 4-5, 4-8, 4-11
startup cycle messages, 2-5
stop count
effect on AutoGate region, 1-29
Stopping
appears during sample cycle, 4-5, 4-8, 4-11
system
controls and indicators, 1-3
optical, 5-5
See also FC 500
system pressure
correct range, 2-6
gauge location, 2-6
how to adjust, 2-6
System Pressure Error, 6-20
system vacuum
daily check, 2-6
gauge location, 2-6
System Vacuum Error, 6-20
system vacuum gauge
when to call service, 2-6

T

target channels, laboratory's
establish target channels, 3-8, 3-14
Taskbar
buttons, 1-8
description, 1-8
icons, 1-8
illustration, 1-8
Start button, 1-8
Windows, 1-8
Temperature Error, 6-20
Temperature Sensor Failure, 6-21
Temperature Warning, 6-21
test tube
how to apply bar-code label, 1-13
ID mismatch, how the system handles, 4-5, 4-8, 4-12
illustration in sample carousel, 1-14
loading carousel, 1-14
put into the carousel, 1-14
size, 4-1
the file contains errors the data checksum does not match the data, 6-23
the file selected contains an invalid panel, 6-26
the file selected contains more panels than is physically possible for a carousel, 6-26
the file selected describes a panel that has a different number of tubes to the panel file, 6-26
the panel file xyz does not exist, 6-29
the profiles have been modified outside of this application, 6-24
the QC product file could not be opened, 6-24
the romlock drivers could not be loaded, 6-27
there is a dependency between gates. the following gates will not be processed as autogates, 6-24
there is no data in the instrument installation file, 6-27
there was a fatal error recovering workspace preferences, 6-27
there were errors writing the QC export file to disk, 6-24
this listmode file is corrupt and you are advised not to use it, 6-28
Tile Special
drag and drop functions, 1-18
TIME parameter
description, 5-15
toolbar
buttons, 1-19
Taskbar buttons, 1-8
topic pane
illustration, 1-39
location, 1-39
Transputer 1 Error, 6-21
Transputer 2 Error, 6-21
Transputer Link Error, 6-21
Transputer Link Warning, 6-21
troubleshooting, 6-1
error message log, 6-15
error messages, 6-13
level sense indicators, 6-30
tube access door
illustration, 4-11
location, 4-11
use for single tube mode, 4-10
tube, sample
See test tube

U

unable to create FlowPAGE2 window, 6-27
unable to open export file. drive letter:Results.txt contains an invalid path., 6-29
Unknown Stream Warning, 6-21
USD-1
bar-code, B-5
USD-1.25

bar-code, B-5
USD-3
bar code, B-5
USD-4
bar code, B-5
USD-6
bar code, B-5
use
instrument settings, 1-35
instrument settings from external file, 1-35
instrument settings from previous test, 1-35
plots and gates from previous test, 1-35
plots and gates from protocol, 1-35
regions from protocol, 1-35
regions from this protocol, 1-35
use and function, instrument, 1-1
User ID, 2-5
user name
See User ID
using
mouse, 1-11
the online help system, 1-38

V

Vacuum Chamber Warning, 6-21
vacuum filter
daily check, 2-6
location, 2-6
when to contact service, 2-6
vacuum gauge
daily check, 2-6
vacuum trap
daily check, 2-7
location, 2-7
when to clean, 6-12
vacuum, checking
daily startup, 2-6
system vacuum gauge, 2-6
vacuum filter, 2-6
vacuum trap, 2-7
Verification
appears during startup cycle, 2-5
verification tubes
AutoSetup, 3-5
compensation coefficients, 3-12
verify
alignment, 3-3
application control, 3-3
correct settings, 3-3
fluidics systems, 3-3
HPCV versus expected value, 3-3
verifying a worklist: update, 1-38, 4-3
video cards
setting needed for 3D acceleration, 1-12
virus protection program
shutdown computer, 2-1
virus scan
not while running CXP, 2-1
voltage pulse signals
description, 5-10
See also signals
voltages
adjust, 3-3
adjust to use negative control, 3-10
run AutoSetup to set, 3-5
See also high voltages

W

warm-up
instrument, 2-5, 3-8
Warning: one or more error(s) occurred while saving the settings file(s), 6-27
Waste Backpressure Error, 6-21
waste container
empty at startup, 2-2
waste full indicator, 6-30
waste full indicator
description, 6-30
location, 1-6, 6-30
Waste Level Error, 6-22
Waste Level Warning, 6-22
water trap
daily check, 2-6
location, 2-6
when to contact service, 2-6
when to call service
system vacuum gauge, 2-6
when to contact service
air filter, 2-6
vacuum filter, 2-6
water trap, 2-6
when to shutdown, 2-8
whole blood
run as a control, 3-3
Windows
Control Panel, 1-10
Desktop, 1-8
Documents, 1-9

Help, 1-9
My Computer, 1-10
password security, 1-8
Programs, 1-9
Recycle Bin, 1-9
Run, 1-9
Search, 1-9
Settings, 1-9
Shut Down, 1-9
Start button, 1-8
Taskbar, 1-8
wizard
AutoSetup, running, 3-8
panel *See* panel wizard
worklist
external files (EWL), 1-37
how to select, 4-4, 4-7, 4-10
panel, 1-37
test, 1-37
worklist, verifying, 1-38, 4-3
Workstation
front view, 1-7

TRADEMARKS

The Beckman Coulter stylized logo and COULTER are trademarks of Beckman Coulter, Inc. and are registered in the USPTO.

All other trademarks, service marks, products, or services are trademarks or registered trademarks of their respective holders.

Cytomics FC 500 with CXP Software Documentation

▪ Reference PN 175570	Use and Function • Installation • Specifications • Log Sheets • Using CXP Software • Glossary • Index
▪ Special Procedures PN 175572	Cleaning Procedures • Replace/Adjust Procedures • Index
▪ Instructions For Use PN 624923	System Overview • Daily Routine • Quality Control • Running Samples • Operation Principles • Troubleshooting • How to... • Bar Code Specifications • References • Index

Come visit us at www.beckmancoulter.com

© 2016 Beckman Coulter, Inc.
All Rights Reserved

BECKMAN COULTER