



Installation training of

GSH-60

Catalogue

01 **Installation Procedure**

02 **Instrument Debugging**

03 **Calibration/Control/Sample Test**

Contents

1.1 Installation condition confirmation

1.2 Unpack case

1.3 Check the accessories

1.4 Unlock robotic arm

1.5 Connect buffer A/B/C & hemolysis

1.6 Install filter

1.7 Connect waste liquid tank

1.8 Connect column

1. Installation Procedure

1.1 Installation condition confirmation

Instrument parameters

- Machine weight：52KG　　Size　564mm*560mm*458mm (L*W*H)
- Power supply：100~240VAC　　Power consumption　320VA

Environment requirement

- Temperature：10~30 degrees
- Relative humidity：30%~70% non-condensing
- Atmospheric Pressure：86kPa~106kPa

- Avoid exposure to direct sunlight
- No frost, condensation, water seepage, rain & sunshine
- Vertical Distance between the Hemolytic agent and the table shall be within 80cm
- Distance between the Machine back Panel and the Wall shall be More than 10cm
- Must use goldsite chromatography column and reagent

1. Installation Procedure

1.2 Unpack case

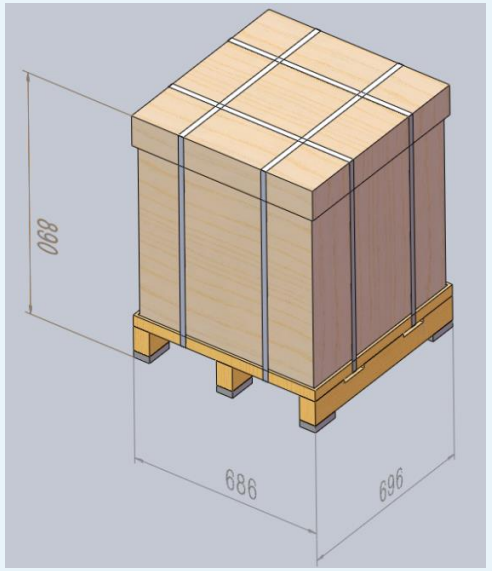

Cut off straps

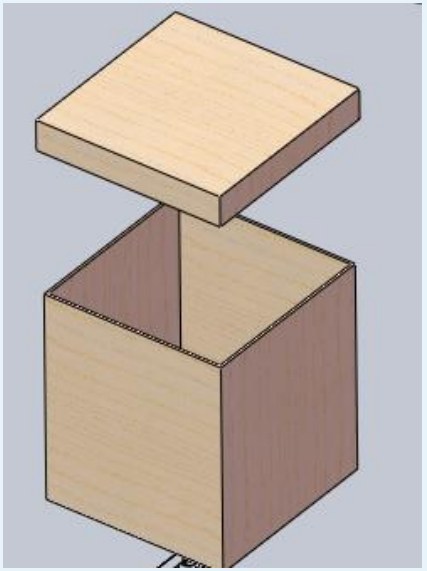

Open the case

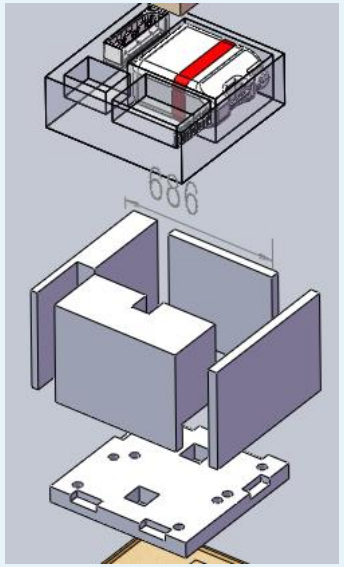

Take out the unit



accessories

1. Installation Procedure

1.3 Check the accessories

Goldsite Diagnostic Inc.

Packing list

GSH-60 Automatic Glycate Hemoglobin Analyzer

Instrument Serial Number:

No.	Description	Specification/Model	Unit	Quantity
1	Automatic Glycate Hemoglobin Analyzer	GSH-60	Unit	1
2	Power cord	CCC A029341 Narken 60227 IEC 53(RVVZ-3P)(XD-001)	pc	1
3	Data cable (serial port)	DB9 1.8m	pc	1
4	Warranty Card		pc	1
5	Quality Certificate	72*90mm	pc	1
6	Operator's Manual		Copy	1
7	Sample Rack		pc	5
8	Waste container	20L	pc	1
9	Waste tube		pc	1
10	Disposable sample cup	KJ211/φ16*38	pc	10
11	Thermal Printer Paper	57*50mm	Roll	1
12	Wiping cloth	CLEANROOM AF-6014	pc	5
13	GSH-60 Filter		pc	2
14	End Marker	V2.0	pc	1
15	Reagent holder	V1.0	pc	1
16	Inlet tubes	Elution buffer A/B/C & Hemolysis, 1 for each	series	1
/	/	/	/	/



Sample racks



Waste liquid tank



Hemolysis tubes



Data cable



filter



Liquid exhaust pipeline

1. Installation Procedure

1.4 Unlock the robotic arm

- Put the machine on table (make sure the table has the capacity on loading)



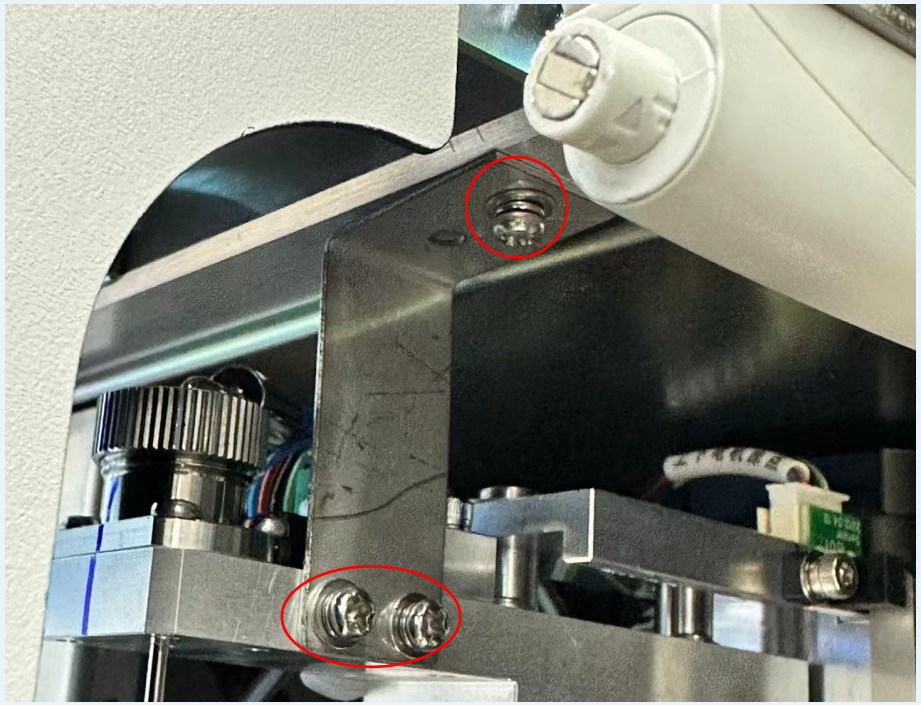

1. Installation Procedure

1.5 Connect Buffer A/B/C & hemolysis



Exhaust air in the bag thoroughly (reagent shall be squeezed onto the exact level to the rim of top of the bottle)

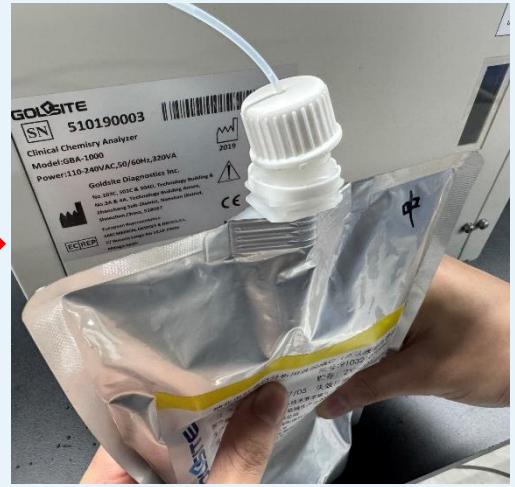

Close the cap and ensure there's no air in the elution buffer bag

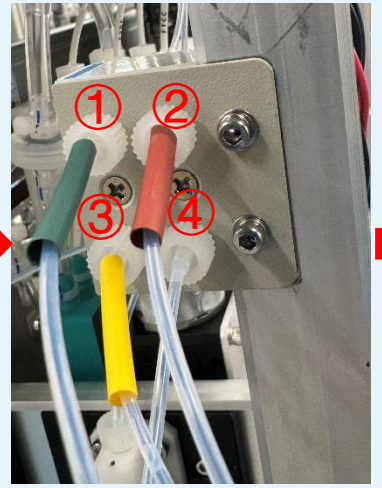

1. Elution buffer A
2. Elution buffer B
3. Elution buffer C
4. Hemolysis



Put the elution buffer on reagent holder

Note: when fixing the A/B/C connectors, must screw it firmly, if there's air leakage here, machine can't suck the elution buffer

1. Installation Procedure

1.6 Install filter

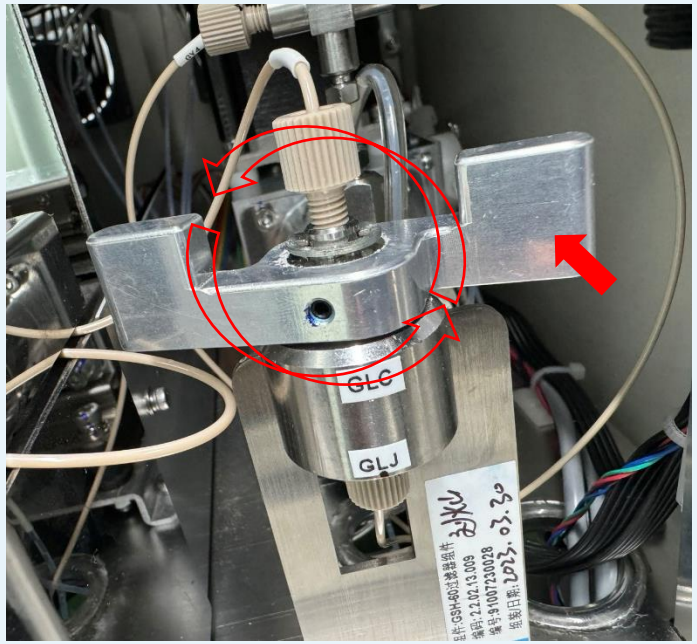

Rotate the metal counter-clockwise



Put in the filter, mind the right direction. Put the filter according to the direction shown above.

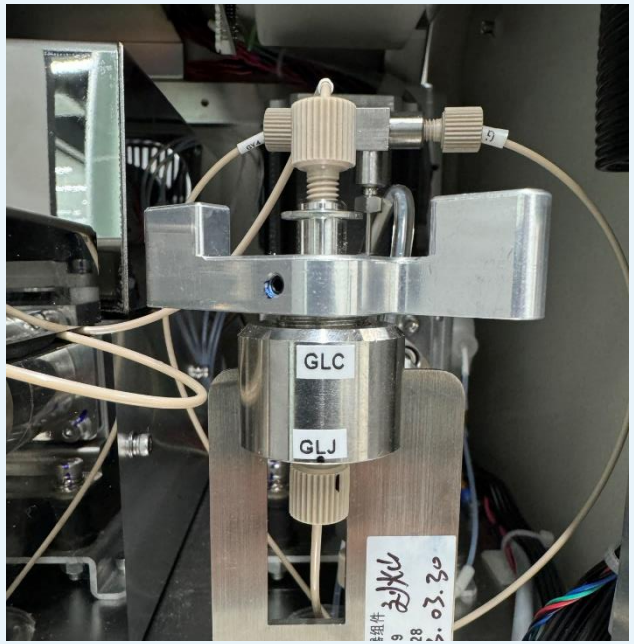

Screw the metal firmly to ensure the airtightness

1.7 Connect waste liquid tank

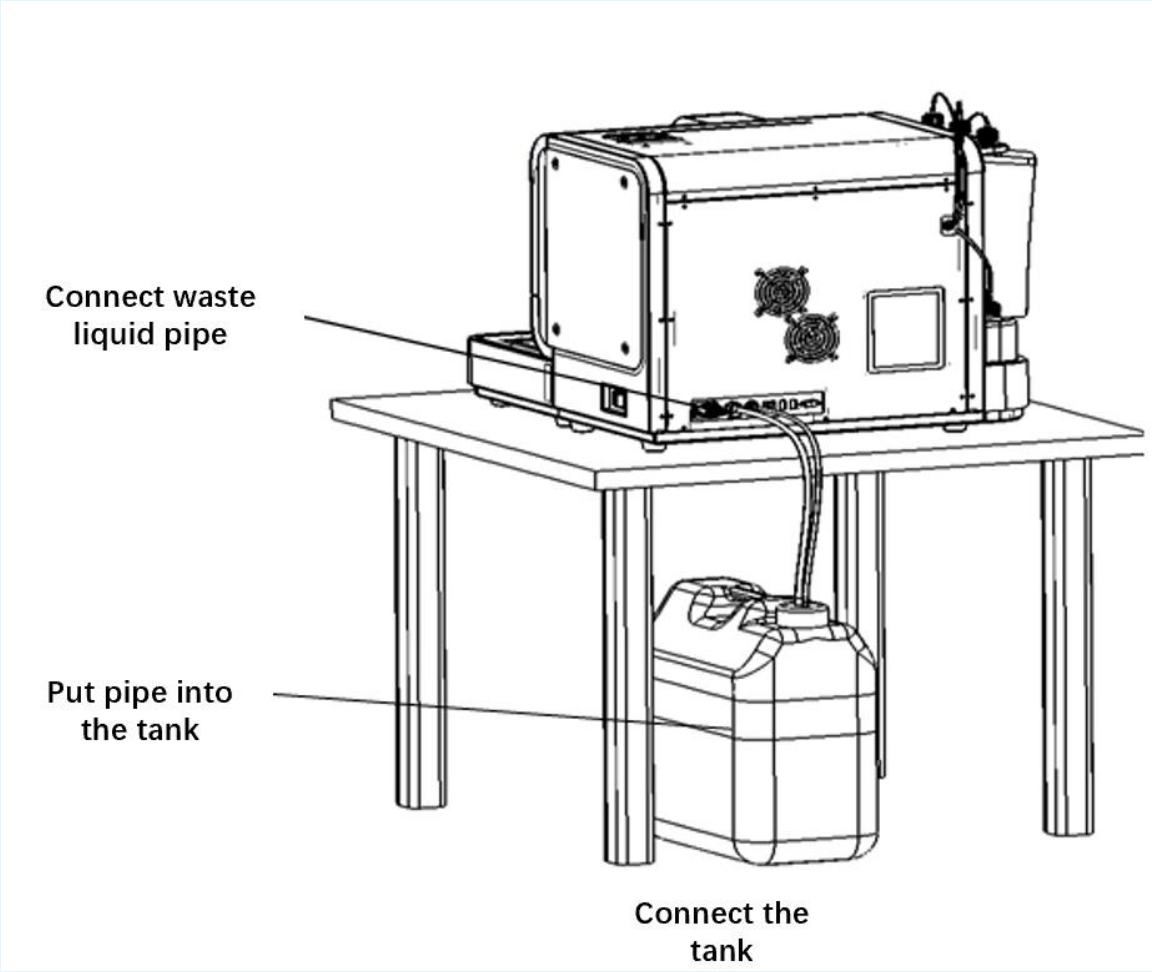

1.8 Connect column

- Turn on the machine
- Connect firmly of the inlet side of column
- Click “pump” to fill pipeline with reagent, click it off until the outlet side reagent comes out
- Connect firmly of the outlet side of column

Note: 1.- Keep the column plugs for future needed
2.- Mind the direction when installing column
3.- avoid reagent from dripping onto the instrument

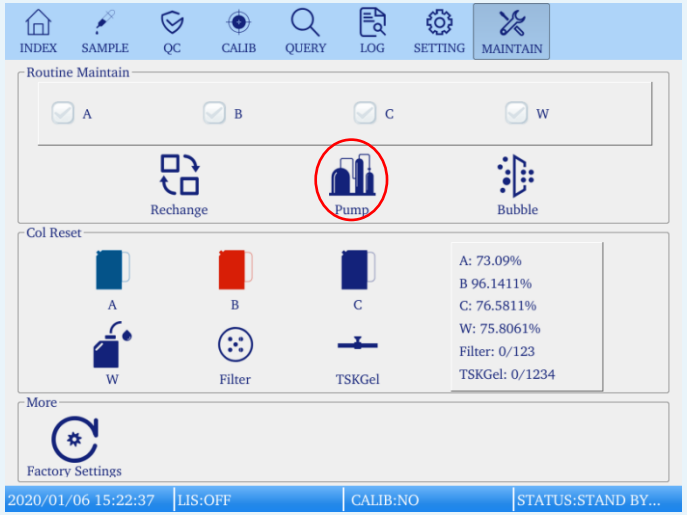



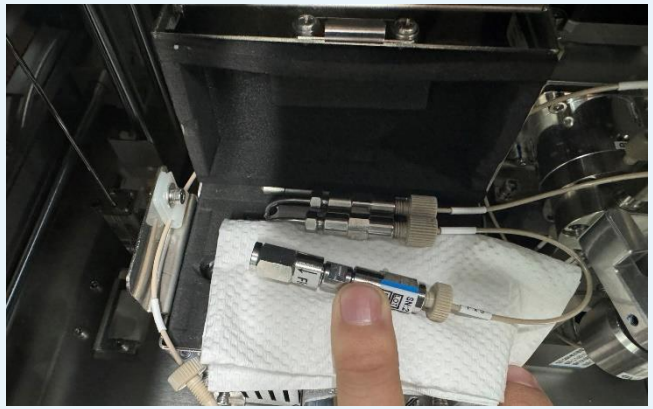

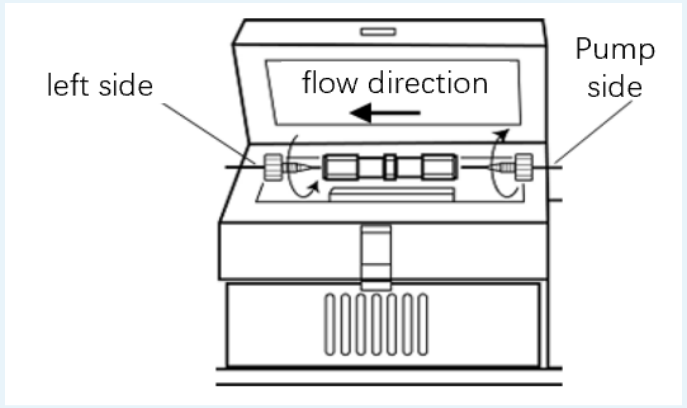

Catalogue

01 Installation Procedure

02 Instrument Debugging

03 Calibration/Control/Sample Test

Contents

2.1 Fill A/B/C buffer

2.2 Exhaust air bubbles

2.3 Check air pressure

2. Instrument Debugging

2.1 Fill A/B/C buffer

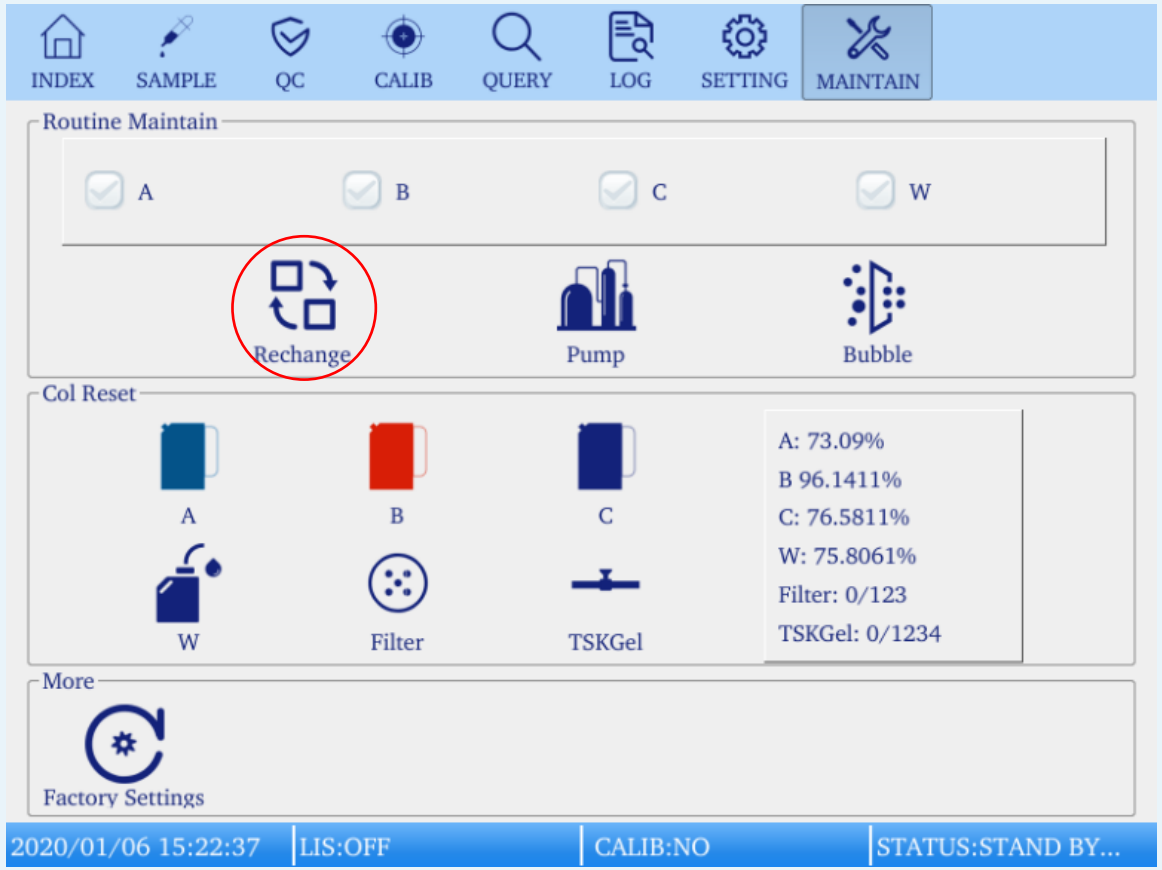

- Click rechange, then machine will automatically change the elution buffer A/B/C and hemolysis
- Do it for two times to ensure pipeline and vacuum chamber are filled with reagent
- Each cycle takes about 3 minutes

2. Instrument Debugging

2.2 Exhaust air bubbles

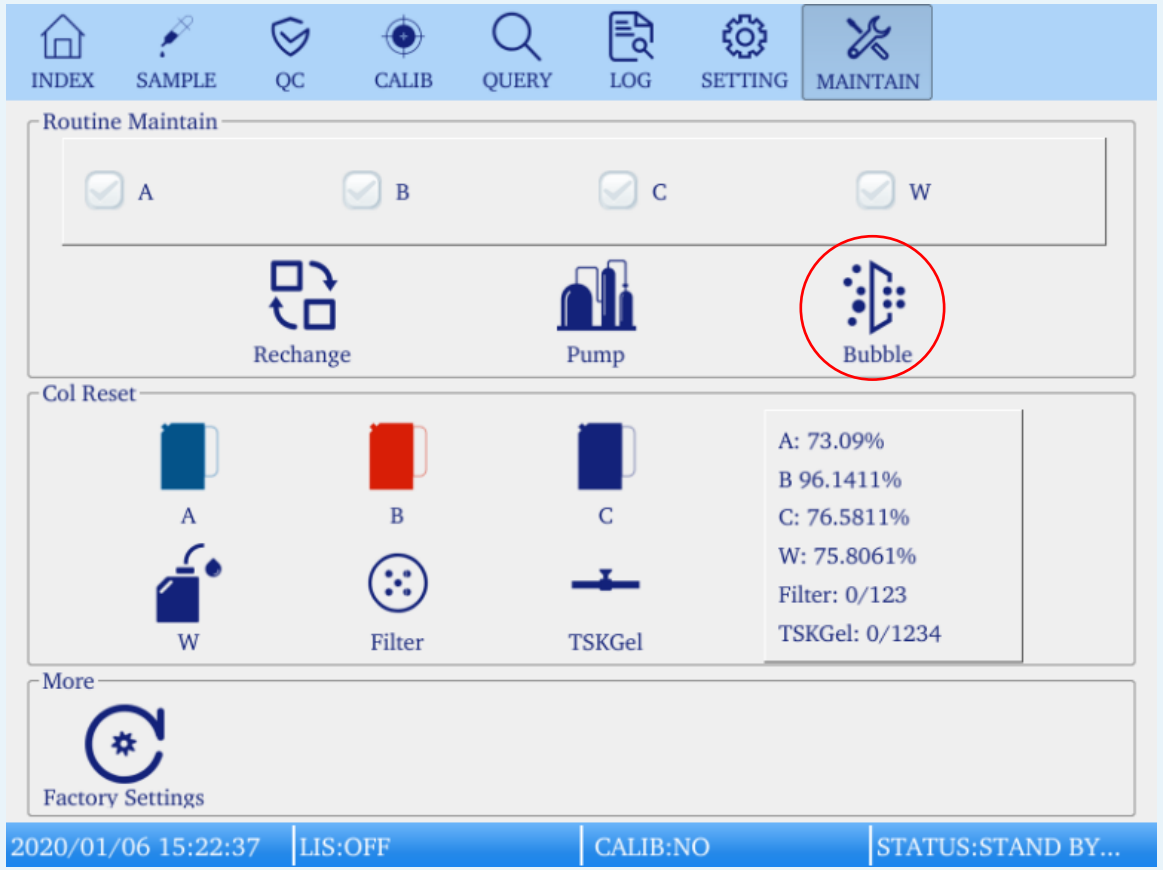

- Click bubble to exhaust air bubbles
- Operation procedure: click bubble>> open the air exhaust valve>>wait for air exhaust>>close the valve firmly
- Do it two times

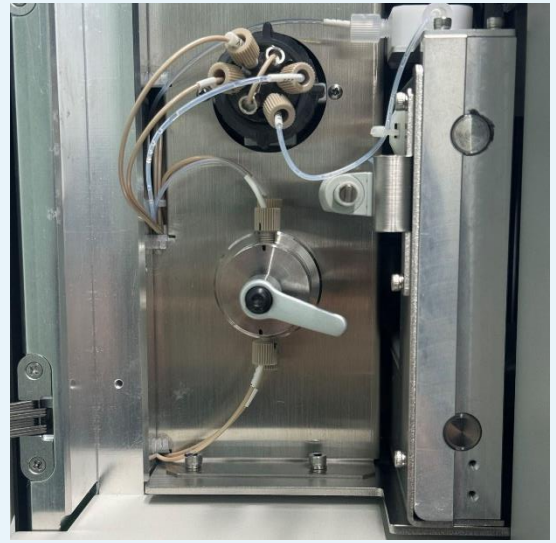

2. Instrument Debugging

2.3 Check air pressure

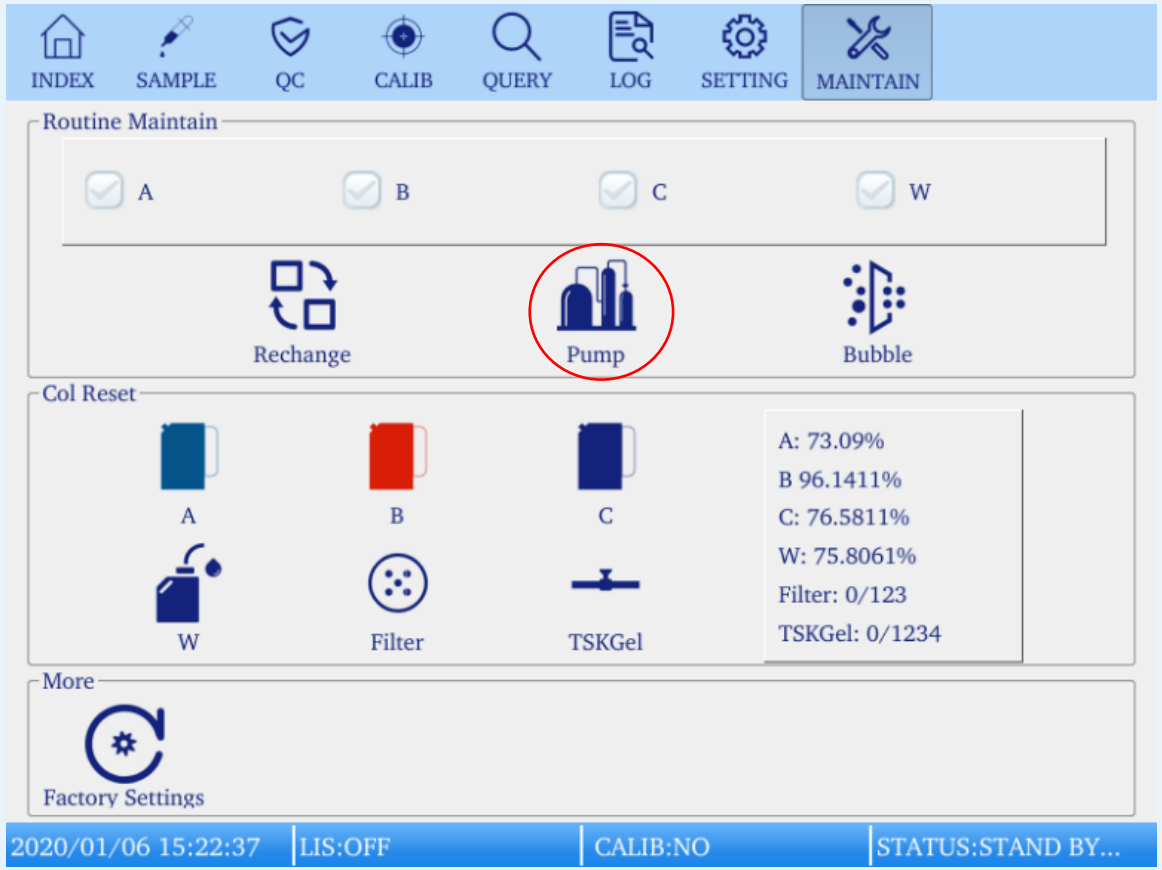

- Click pump to start air pressure building test
- Air pressure shall reach **6-7Mpa** within 30s

Catalogue

01 Installation Procedure

02 Instrument Debugging

03 Calibration/Control/Sample Test

Contents

3.1 Calibration test

3.2 Control test

3.3 Sample test

3. Calibration/Control/Sample Test

3.1 Calibration test





1.500ul pure water for reconstitution

2.add 5ul calibrator and 995ul pure water

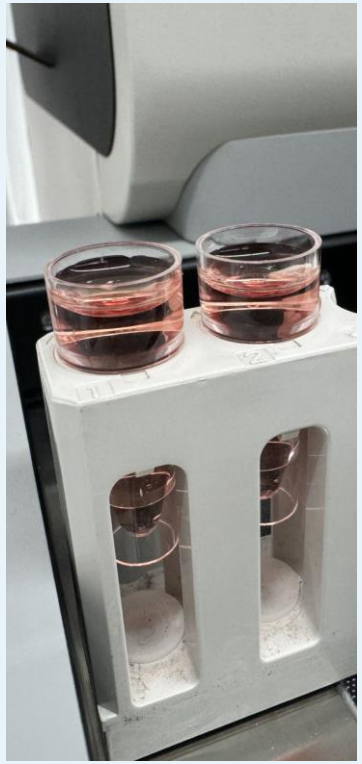

3.low concentration calibrator on the left and high one on the right

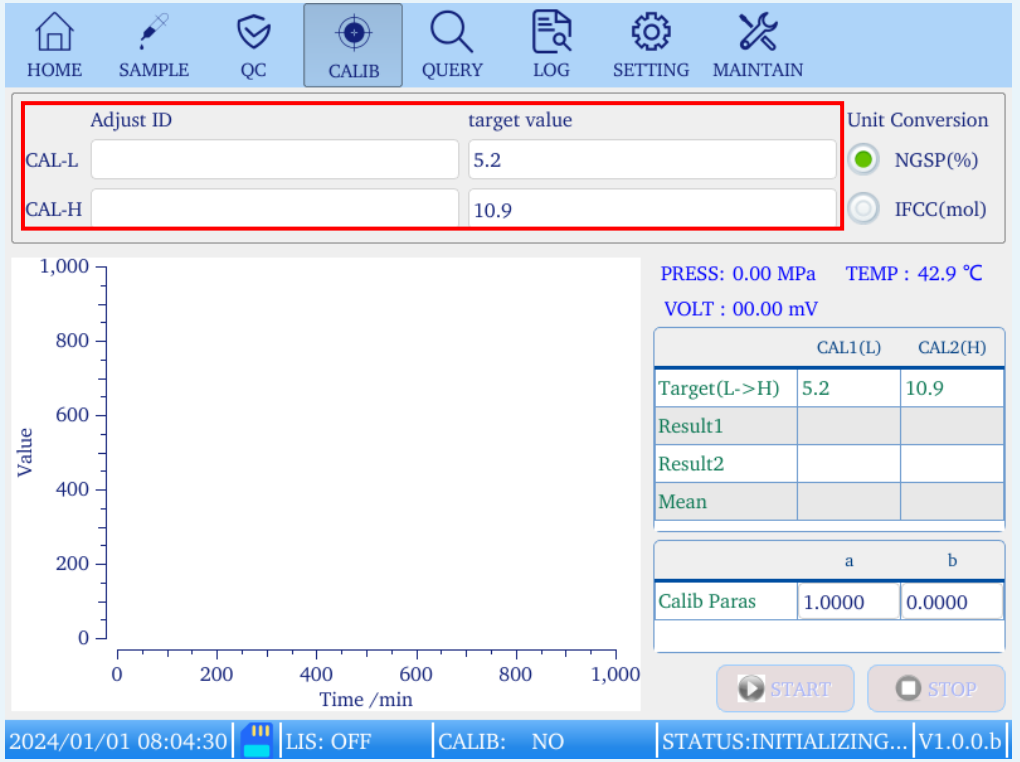

4.input " cal-l" & "cal-h" ID
5.input low & high calibrator concentration target value
6.start test

3. Calibration/Control/Sample Test

Calibration result check

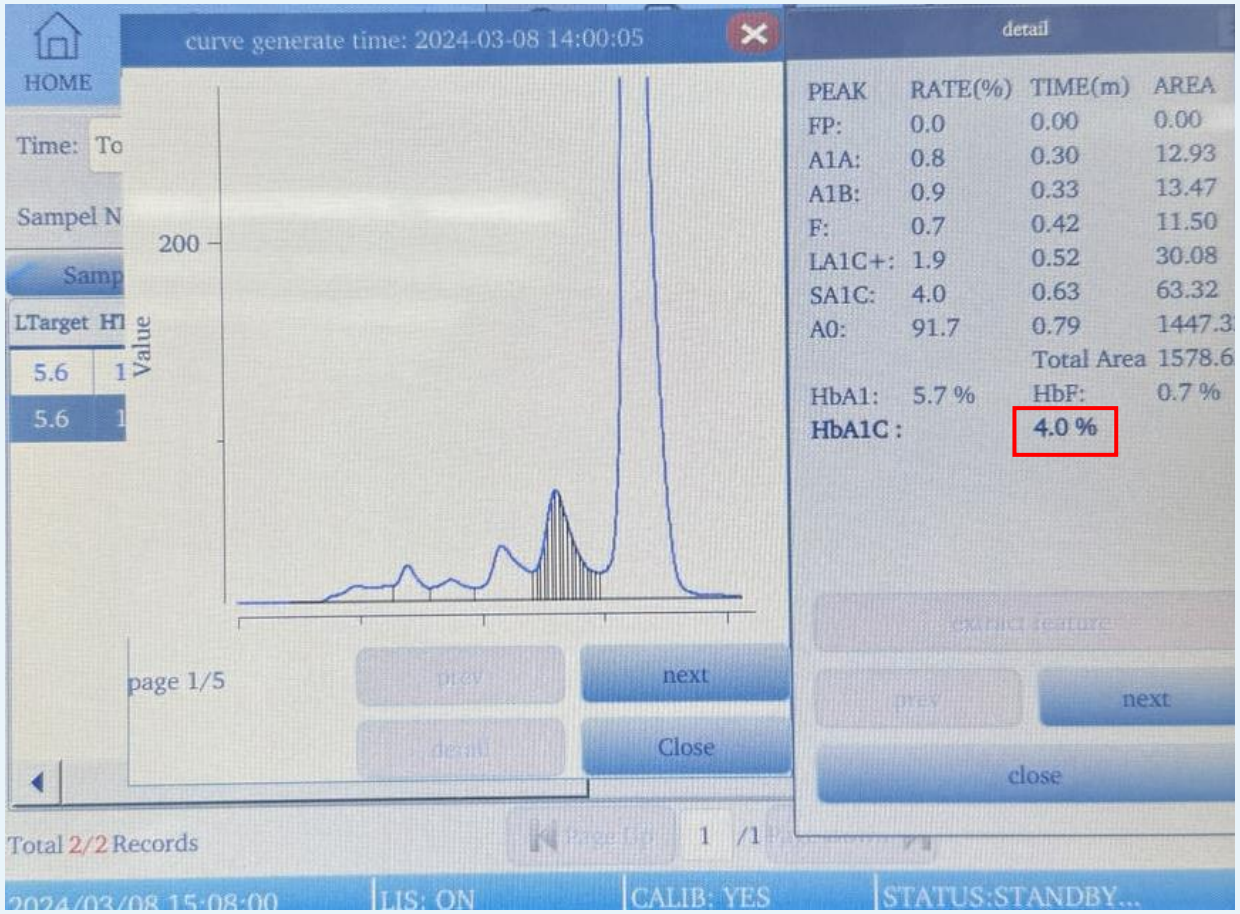

after running calibration test, machine will report success test on the screen and recalculate the calibration factor.

click to check chromatograph curve and HbA1c concentration.

When to do calibration test?

1.-when changing A/B elution buffer
2.-when changing column and filter
3.-when edit instrument parameters in factory setting

3. Calibration/Control/Sample Test

3.2 Control test







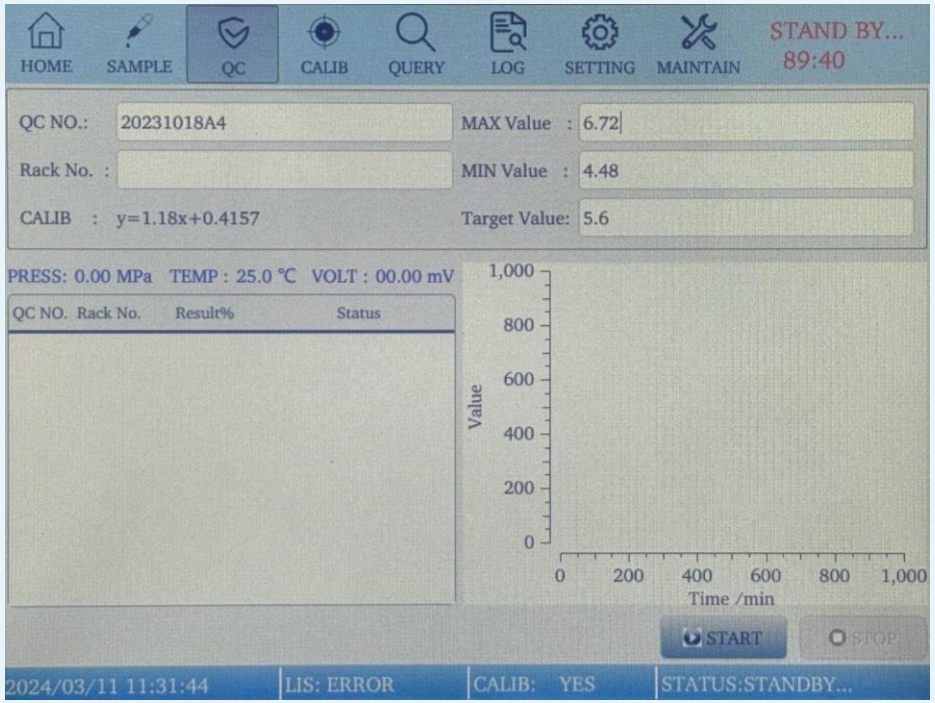

1.500ul pure water for reconstitution

2.add 5ul control and 995ul pure water

3.input QC number for traceability
4.input target value and upper/lower threshold
5.start test

3. Calibration/Control/Sample Test

Control result check

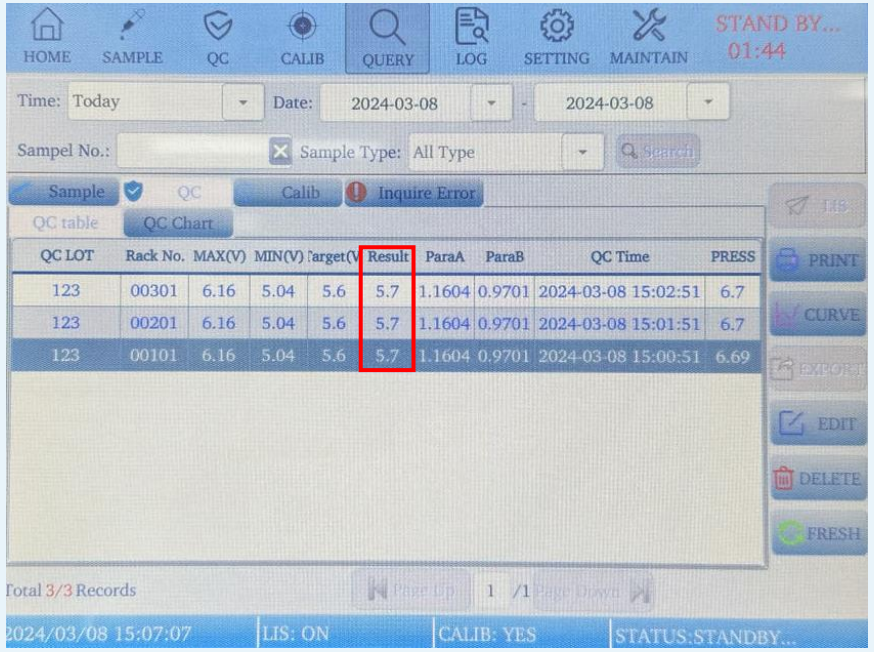

Control result should be checked in query tab, there are QC table & QC chart for confirmation.

Under the standby mode, control result can be printed or sent to LIS. The control data can be exported to USB as well.

QC chart

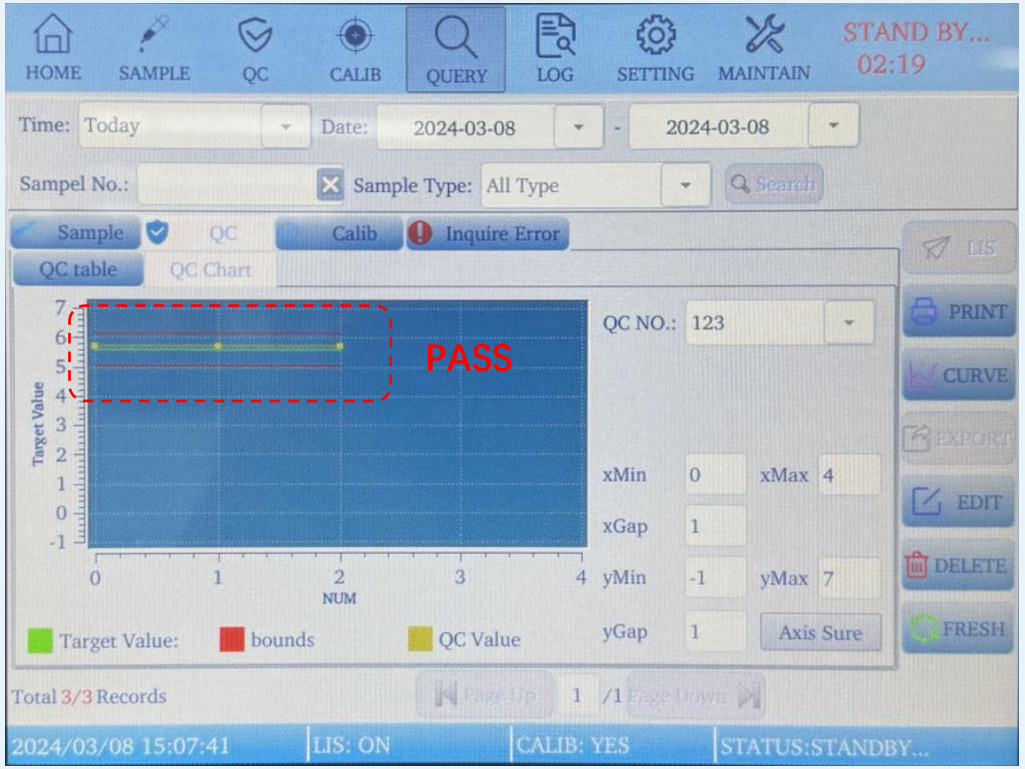

3.3 Sample test

Precaution before test

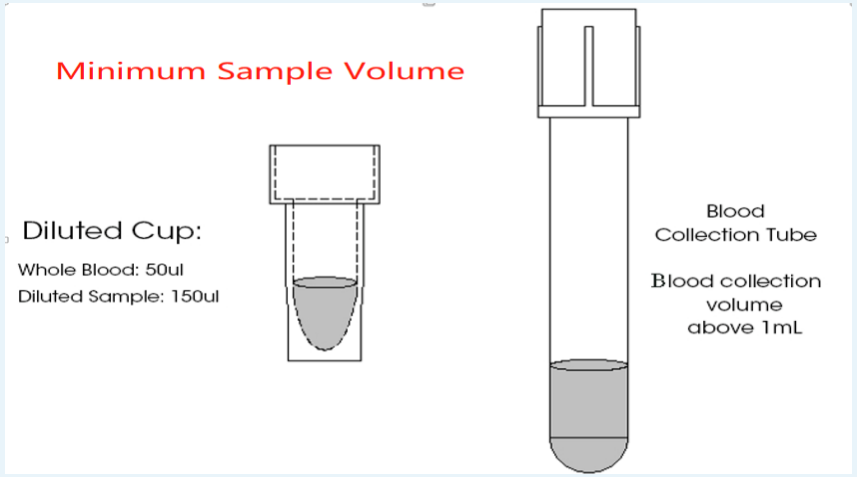

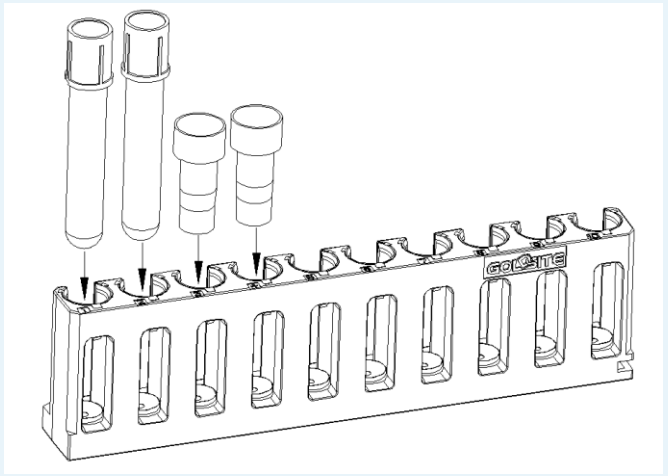

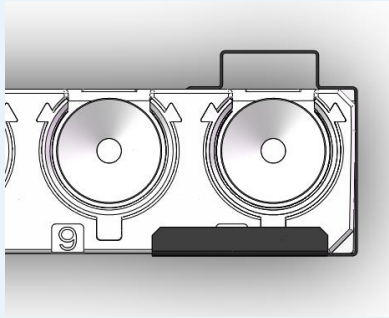

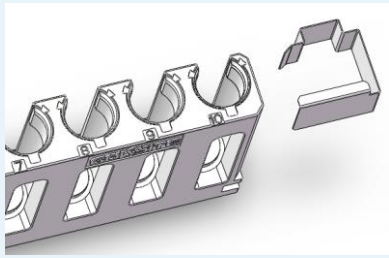

- Min volume for dilution cup & Blood Collection Tube

Dilution cup Whole blood: 50ul diluted sample: 150ul
BCT Whole blood: 1000ul

- BCT must be inserted to the bottom

- Install the end marker on the last sample rack

3. Calibration/Control/Sample Test

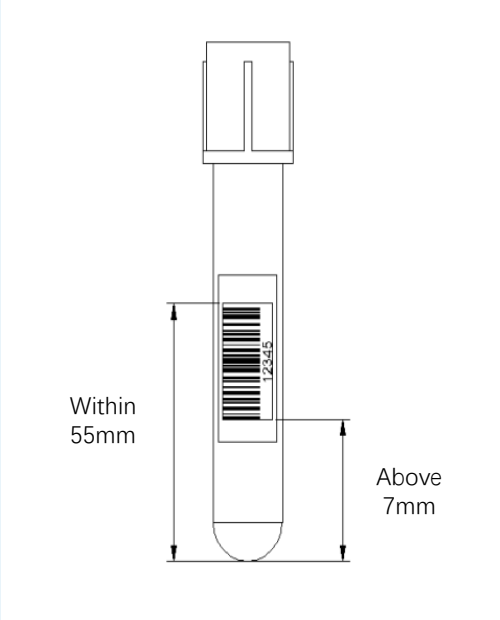

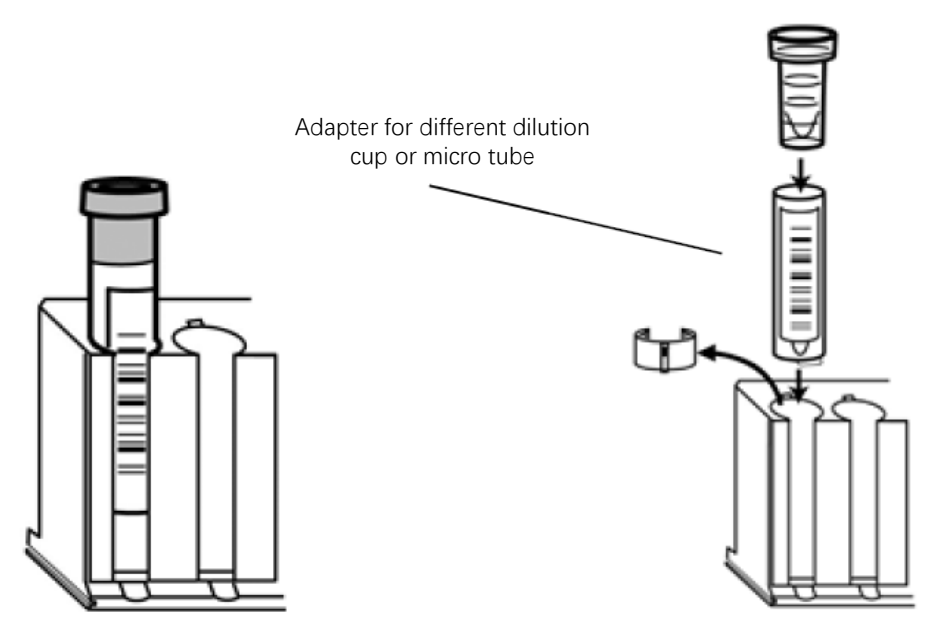

- Paste barcode according to requirement. Improper way of paste may cause failure of recognition by scanner
- Microtubes container needs adapter

3. Calibration/Control/Sample Test

Sample test

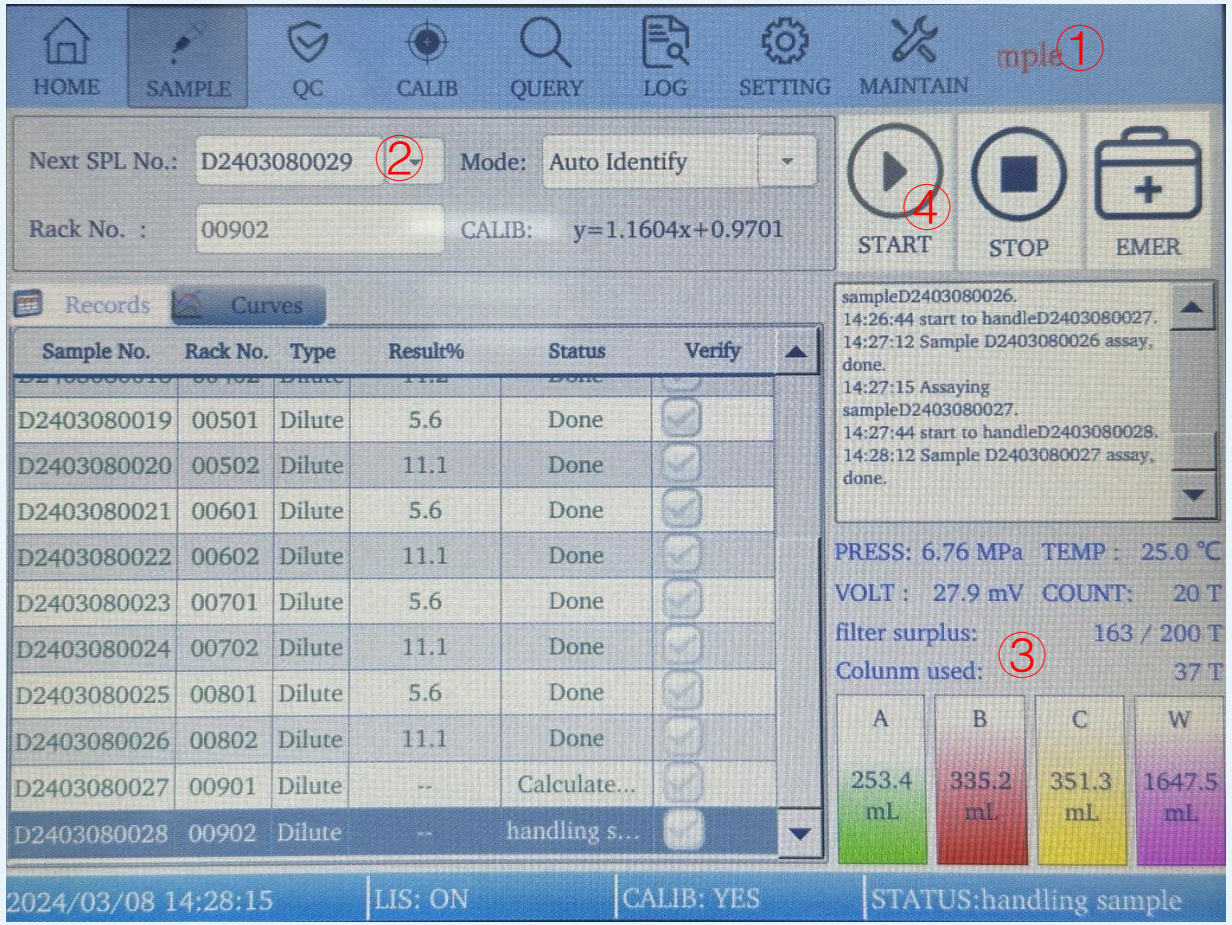

① Check the machine is under standby mode
② Input sample number for traceability (if there's barcode on BCT, then this step can be skipped)
③ Ensure the elution buffer and column, filter have enough usage times
④ Start test and check result

Thank you !

Whatsapp
+86-13979655124

Visit us
en.goldsite.com.cn

Email
Service@goldsite.com.cn