

GSH-60 Automatic HPLC HbA1c Analyzer

Operator's Manual

Goldsite Diagnostics Inc.

GSH-60 Automatic HPLC HbA1c Analyzer

Operator's Manual

OM4542801

Version 1.0 (May 2024)

The information in this manual was correct at the time of printing, but Goldsite Diagnostics Inc. will continue to improve the product and reserves the right to change the manual, the instrument and the maintenance procedures.

Without the written approval of Goldsite Diagnostics Inc., neither this manual nor any part of it can be copied and disseminated.

Revision History

Version	Software Version	Date	Reason of Revision
1.0	V1.0	May 2024	1st version

Trademark

GOLDSITE is the trademark of Goldsite Diagnostics Inc.

Software Copyright

The software copyright of Goldsite Diagnostics Inc. belongs to Goldsite Diagnostics Inc. Shenzhen Goldsite Diagnostics Inc. retains ownership of the software. The company authorizes you to use the software on this non-transferable workstation.

Statement

Goldsite Diagnostics Inc. has confirmed the manuals, reagents, instruments, software and operator-definable characteristics of the system provided to ensure that the product performance is optimized and meets product specifications. Goldsite Diagnostics Inc. does not recommend operators to define modifications themselves, as these changes may affect system performance and test results. If changes are made to these manuals, instruments, reagents or software provided by Goldsite Diagnostics Inc., it is the responsibility of the operator to confirm these changes.

Copyright © 2024 Goldsite Diagnostics Inc.
All rights reserved

Contents

Chapter 1 General Information 1
1.1 Intended Use 1
1.2 Specifications 1
1.3 Performance 1
Chapter 2 Instructions Before Use 3
2.1 Installation 3
2.1.1 Inspection Before Installation 3
2.1.2 Installation Requirements 4
2.1.3 Power 4
2.1.4 Environmental Requirements 4
2.1.5 Storage and Transportation Conditions 4
2.2 Symbols on Packaging and Labels 4
2.3 Precautions and Hazards 6
2.3.1 Operator Qualifications 6
2.3.2 Electrical Safety 6
2.3.3 Consumables 7
2.3.4 Waste 7
2.3.5 Daily Operation 8
2.3.6 Evaluation of Results 8
2.3.7 Network 9
2.4 Disclaimer 10
2.5 Warranty and Maintenance 10
2.6 Regulations 11
2.7 Disposal 12
Chapter 3 Structure of Instrument 13
3.1 Structure of Instrument 13
3.2 Components Inside Instrument 14
3.3 Connection 16
3.3.1 Waste Tube Connection 16
3.3.2 Elution Buffer Tube Connection 17
3.3.3 Hemolysis Tube Connection 17
3.3.4 Power 18
3.4 Chromatography Column 18
Chapter 4 Screen Operation 21
4.1 Main Screen 21
4.2 SAMPLE Screen 22
4.3 QC Screen 23
4.4 CALIB Screen 24
4.5 QUERY Screen 25
4.6 LOG Screen 27
4.7 SETTING Screen 28

4.7.1 TIME 28
4.7.2 LIS 29
4.7.3 CAPACITY 30
4.7.4 PRINT 31
4.7.5 AUTOSTART 32
4.7.6 OTHER 33
4.7.7 ABOUT 34
4.8 MAINTAIN Screen 34
4.8.1 Routine Maintain 35
4.8.2 Reset 35
4.9 Close 36
Chapter 5 Measurement Procedures 37
5.1 Principle of Measurement 37
5.2 Power On 37
5.3 Working States of the Instrument 38
5.3.1 Warming Up 38
5.3.2 Standby State 39
5.3.3 Testing 39
5.3.4 Washing 39
5.4 Preparing for Testing 40
5.5 Calibration 40
5.5.1 Recalibration Scenarios 40
5.5.2 Preparation and Procedures 41
5.5.3 Calibration Failure 41
5.5.4 Calculations of Calibration Parameters 42
5.6 Quality Control 42
5.7 Sample Container 43
5.7.1 Blood Collection Tube 44
5.7.2 Sample Cup 44
5.7.3 Barcode 45
5.8 START/STOP a Test 45
5.9 Test of an Emergency Sample 46
5.10 Result Report 47
Chapter 6 Maintenance 49
6.1 Precautions for Maintenance 49
6.2 Maintenance Inspection Items 49
6.3 Manual Tube Washing 51
6.4 Replacement of Elution Buffers and Hemolysis 51
6.5 Manual Starting of the Pump 52
6.6 Replacement of Column 53
6.7 Replacement of Filter 55
6.8 Replacement of Reagent Tube Filters 56
6.9 Removing Air Bubbles 56
6.10 Replacement of Printer Paper 57

Chapter 7 Troubleshooting 59
7.1 Precautions for Troubleshooting 59
7.1.1 Column 59
7.1.2 Elution Buffers 59
7.1.3 Hemolysis 59
7.1.4 Long-term Downtime 59
7.2 Failure Inspection 60
7.3 Error Messages 60
7.3.1 Errors that Abort Current Tests 61
7.3.2 Common Test Errors 61
7.3.3 Errors that Abort the Following Tests 61
7.3.4 Other Errors and Messages 61
7.4 Unusual Chromatogram 62
Chapter 8 Appendix 63
8.1 LIS Communication 63
8.2 Instrument Specifications 63

Preface

GSH-60 Automatic HPLC HbA1c Analyzer, when used in conjunction with the corresponding reagents, is intended for in vitro diagnostics use for the quantitative determination of glycated hemoglobin (Hemoglobin A1c, HbA1c) in human whole blood.

Based on the charge differences, different hemoglobin components can be separated in the chromatography column, which contains the non-porous filler with cation exchange group. The instrument can then determine the HbA1c concentration according to the percentage of HbA1c in relation to other components. The instrument features a convenient sample loading method: the blood collection tube with the rubber cover can be directly placed on the sample rack and placed in the sampling device of the instrument for sample testing.

This manual provides information on the safe and correct operation of this instrument. Before using the instrument, please read the manual carefully. Refer to this manual if necessary when something unclear or an abnormal situation occurs during daily use.

Chapter 1 General Information

1.1 Intended Use

GSH-60 is a fully automatic and easy-to-operate glycated hemoglobin analyzer. The instrument, when used in conjunction with the corresponding reagents, is intended for in vitro diagnostic use for the quantitative determination of the glycated hemoglobin (Hemoglobin A1c, HbA1c). GSH-60 can be used in many scenarios, including hospital laboratories and clinics, and can provide highly sensitive and accurate analysis.

The reagents used for GSH-60 are produced by Goldsite Diagnostics Inc.

1.2 Specifications

Table 1-1 Specifications

Model	GSH-60
Test Principle	Ion exchange high performance liquid chromatography
Power Requirements	100 – 240VAC, 50/60 Hz
Power Consumption	320 VA
Dimensions	564 mm × 560 mm × 458 mm (Length × Depth × Height)
Weight	52 kg

1.3 Performance

(1) Accuracy
The reference substance is tested as a sample. The relative deviation of the analyzer's measurement results should be within ± 3%.

(2) Repeatability
For samples with a concentration of 4.0% to 6.5% (20.2 mmol/mol to 47.5 mmol/mol), the CV of the repeated measurement results of the analyzer should not be greater than 1.5%.

(3) Linearity
Within the range of 2.8% -18.4%, the linear correlation coefficient r of the measurement results should not be less than 0.9900.

(4) Carryover
The carryover should not be greater than 3.0%.

(5) Stability
After the system is turned on and become stable, the relative deviation of the results of testing the same normal sample should not exceed ± 3.0% within 8 hours.

Chapter 2 Instructions Before Use

The installation of this instrument should be carried out by our company's after-sales service personnel or personnel who have received our company's maintenance training.

During the installation of this instrument, the cover of the instrument must be removed, so the high-voltage part inside would be exposed, which can be dangerous. Therefore, customers are requested not to open the package and perform the installation operation by themselves. In addition, when moving the instrument, be sure to carry it with two or more people holding its bottom with both hands.

2.1 Installation

2.1.1 Inspection Before Installation

(1) Before installation, please carefully check the packaging. If there is any damage during transportation, please immediately contact our after sales.
(2) After unpacking, please carefully check the appearance of the instrument and check the packing list. If there is any damage or lack of any accessories, please immediately contact our after sales.
(3) Packing List: refer to Table 2-1.

Table 2-1 Packing List

Item	Quantity
GSH-60 Automatic HPLC HbA1c Analyzer	1
Operator’s Manual	1
Power cord	1
Data cable	1
Quality Certificate	1
Sample Rack	5
Waste container	1
Waste tube	1
Disposable sample cup	10
Thermal Printer Paper	1
Wiping cloth	1
GSH-60 Filter	2
End Marker	1
Reagent holder	1
Inlet tubes (for connection to reagent)	4
Warranty Card	1

2.1.2 Installation Requirements

Place the instrument on a stable surface that is free from harmful gases, dust, vibration, wind and out of direct sunlight.

2.1.3 Power

- Connect the instrument to a power supply with a small voltage change and a large power supply capacity.
- If the power supply capacity of this instrument is insufficient or exceeds the rated voltage, it may cause a fire.
- Please confirm the connection of the ground wire. Improper grounding of the instrument ground wire may cause electric shock.
- Do not modify the power cord of this instrument or use extension cords and multi-plug wiring.

2.1.4 Environmental Requirements

- Ambient Temperature: 10°C – 30°C.
  Do NOT use the instrument in environments with large temperature differences. A large temperature difference may induce condensation, which can cause electric leakage and affect the normal operation of the instrument.
- Relative Humidity (RH): 30% – 70%, non-condensing;
- Atmospheric Pressure: 79.0 kPa – 106.0kPa;
- Power Requirements: 100-240V;
- Keep away from electromagnetic field interference sources;
- Avoid direct sunlight;
- Free of frost, condensation, water seepage, and sunshine

2.1.5 Storage and Transportation Conditions

The packed analyzer should be stored and transported in -20°C – 55°C, relative humidity 10% – 90%, corrosive gas free and well-ventilated environment. Handle with care to prevent severe impact, vibration and rain and snow splashing.

2.2 Symbols on Packaging and Labels

Table 2-2 Symbols

Symbol	Description
	In vitro diagnostic medical device
	Serial number
	European Conformity
	Manufacturer
	Not for general waste
	Caution
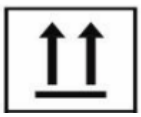	This way up
	Fragile
	Keep dry
	Do not flip
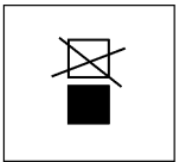	Do not stack
	Handle with care

Symbol	Description
	Protective ground
	Biological risks
	Caution, hot
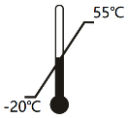	Temperature limit
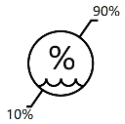	Humidity limit

2.3 Precautions and Hazards

The analyzer leaves factory without any problems that could compromise safety. To maintain this condition and ensure normal operation, the operator must follow the precautions and hazards instructions in this manual.

2.3.1 Operator Qualifications

The analyzer may only be used by personnel with relevant technical, knowledge and operating experience. These personnel must be trained in the proper use of the analyzer.

Contact Goldsite's customer service department if any training courses are needed.

2.3.2 Electrical Safety

- When connecting the instrument to a power source, ONLY the electrical outlet that is grounded can be used.
- Do not move the protective cover or safety components to avoid exposing live parts of the instrument. Even if the analyzer is turned off, some components (such as capacitors) may still discharge due to the potential voltage. All live parts can cause electric shock and are potentially dangerous.
- The instrument bench must be kept dry.

- Maintenance and repair work must be performed in accordance with the procedures specified in this manual. This requirement also applies to the replacement of instrument components. Improper damage to the analyzer will relieve the manufacturer's commitment and therefore incur related maintenance costs.
- If adjustments, maintenance and repairs are to be performed on an active instrument, it must be handled by trained personnel who are familiar with the hazards involved.
- Be careful when handling containers containing liquids on the analyzer. Liquid spills into the analyzer may come into contact with live parts, which can cause damage to mechanical components and pose the risk of electric shock.

2.3.3 Consumables

The instrument should be used in combination with the following special chromatography column, elution buffers, and hemolysis solution. Do not use other columns and reagents. Our company will not be responsible for any damage caused by using products other than those specified.

- GSH-60 Test Column
- Hemolysis
- HbA1c Elution Buffer A
- HbA1c Elution Buffer B
- HbA1c Elution Buffer C
- HbA1c Calibrator, HbA1c Control
- Micro sample cup

**Caution:**

- **The elution buffers, hemolysis, calibrators, and controls may cause discomfort in skin and mucosa.**
- **Wear gloves during operation!**
- **Please follow the instructions in the inserts for proper use of the column, elution buffers, hemolysis, calibrator and control.**
- **The used controls, samples, reagents and other consumables should be disposed of in accordance with national and local regulations.**

2.3.4 Waste

- Only persons with knowledge of clinical examination and disposal of infectious waste should use this instrument.
- Waste liquid is potentially infectious.
- Empty the waste container before using the analyzer. Discard the waste as appropriate.
- Blood samples are at risk of contamination with infectious agents. Incorrect operations may infect the operator or surrounding personnel with infectious agents. To prevent infection,

handle the sample very carefully during operation, and use protective equipment (gloves, masks, etc.) during routine maintenance of the instrument.

- The used columns, filters, sample needles, and sample cups can become contaminated. Protective equipment (gloves, masks, etc.) must be used when dealing with these pollutants, and the surrounding environment or personnel's health must not be damaged during disposal. Please dispose of them properly as medical waste in accordance with relevant regulations.

2.3.5 Daily Operation

Sample Cup

- The sample cup is disposable. Do not use it repeatedly.
- Avoid dust particles and other dirty particles from entering the sample cup which may affect the test results.
- Store the sample cup in a dust-proof place.
- There is no guarantee that sample cups, sample containers, and waste tubes can tolerance organic solvents, acids, alkalis, or other inorganic solvents.
- Do not use any organic solvents (anhydrous ethanol), acids, alkalis, and other inorganic solvents unless explicitly approved by Goldsite.

Elution Buffer / Hemolysis

- Replace the elution buffer and hemolysis when needed.
- To prevent contamination, disinfect the piping system monthly.

Reagents / Calibrators / Controls

- Always follow the instructions in the inserts provided with the reagents, calibrators, and controls.
- Do not use expired reagents, calibrators and controls.
- To avoid contamination, mark the screw caps of reagents, calibrators, and controls appropriately.
- After use, replace the sealing plugs and screw caps of the corresponding reagents, calibrators and quality controls, and store them in accordance with the relevant instructions.

2.3.6 Evaluation of Results

Follow the procedures below to ensure the analyzer is working properly and providing reliable results:

- Perform quality control tests according to the reagent lot to ensure that the instrument is working properly, and the reagents have not deteriorated.

- Routinely inspect the analyzer in accordance with the maintenance requirements.

Incorrect results can lead to incorrect diagnosis and pose risk to patients.

2.3.7 Network

- Operating Environment
  Linux + front and back system
- Operating Environment Requirements
  Embedded Cortex-A8 platform
- Hardware Configuration
  Main control STM32F373VCT6; FLASH 256KB; RAM 32KB
- Core Board
  AM3354BZCZD80 NAND FLASH 256MB DDR3 512M
- Network Conditions
  Network Architecture: CS; Network Type: Local Area Network
- Data Interface
  The device sends the test result report to the LIS system through the wired network, and the transmission protocol is HL7.
- User Access Control
  - User Type: ordinary users and administrators
  - User Rights: Ordinary users use the device for clinical testing and record query. Compared with ordinary users, administrators can also access factory settings to debug and maintain equipment.
  - User Type Authentication: No password is required to access ordinary user permissions, and a password is required to access administrator permissions.
- Security Software
  The GSH-60 application program runs on a dedicated and customized embedded Linux platform, which is not universal, and unauthorized operators cannot obtain or tamper with the device software information. The device sends data to the LIS server unidirectionally. The LIS server cannot actively obtain data from the device. The device does not support remote control, and the device data information cannot be obtained remotely. Electronic data exchange using a USB flash drive or other device is not supported, and device information cannot be copied or tampered with.
- Software Update Requirements
  The software has a system upgrade option in the settings screen. When accessing the USB flash drive with the upgrade package, the system will automatically detect the upgrade files with a specific name and format. After clicking the upgrade button, the system will automatically upgrade. After the upgrade is complete, the instrument restart to complete the process. If the upgrade file name or format is not correct, it will not be recognized, and the upgrade cannot be performed.

2.4 Disclaimer

Goldsite Diagnostics Inc. shall be exempt from liability for accidents, problems and damages in the following cases:

- Damage to device or operators caused by uncontrollable events such as earthquakes or fires.
- Damage to device or incorrect results due to intentional negligence or misuse by the operator.
- Damage due to failure to follow the safety and precautionary instructions in the manual.
- Damage due to malfunction caused by using external computer / device or software not related to Goldsite Diagnostics Inc.
- Damage caused by receiving maintenance or repair by persons not authorized by Goldsite Diagnostics Inc.
- Only the manufacturer or the distributors can inspect or provide any parts. Do not disassemble the analyzer without authorization.

2.5 Warranty and Maintenance

(1) Warranty

Goldsite Diagnostics Inc. or its authorized distributors guarantee that after the instrument is installed, there will be no material or production failure if it is operated according to the manual.

This warranty does not cover damage caused by:

- Malfunctions caused by accidents, neglect or failure to follow operator's manual.
- Use of unauthorized reagents and consumables.
- Operation in an environment that is contrary to the operating environment specified in the operator's manual.
- Repairs or maintenance by personnel not authorized by Goldsite Diagnostics Inc.

(2) Maintenance

Goldsite Diagnostics Inc. or its authorized distributors guarantee that after the instrument is installed, maintenance services can be provided during the local legal working days.

- If maintenance is required at other times, please contact the local authorized local distributor.
- Goldsite Diagnostics Inc. and its local distributors will notify you of the requirements and costs of software updates.
- According to the service agreement, we will provide qualified personnel to contact you and provide you with services.

2.6 Regulations

Caution:

- **GSH-60 Automatic HPLC HbA1c Analyzer meets the emission and immunity requirements specified in GB/T 18268.1 and GB/T 18268.26, refer to Table 2-3.**
- **It is the responsibility of the operator to guarantee the electromagnetic compatibility environment of the device so that the device can work normally.**
- **It is recommended to evaluate the electromagnetic environment before using the device.**

Caution:

- **GSH-60 Automatic HPLC HbA1c Analyzer is designed and tested according to the requirements of Class A device in GB 4824. In a domestic environment, this equipment may cause radio interference, which requires precautions.**
- **Do not use the device near strong radiation sources (such as unshielded radio frequency sources), which may interfere with the normal operation of the device.**

Table 2-3 Electromagnetic Emission

Emission Test	**Compliance**
GB 4824 RF Emission	Group 1
GB 4824 RF Emission	Class A
GB 17625.1 Harmonic Emission	Not applicable
GB 17625.2 Voltage Fluctuation / Flicker Emission	Not applicable

Table 2-4 Electromagnetic Immunity

Test Item	**Standard**	**Results**	**Performance**
Electrostatic Discharge	GB/T 17626.2	Contact Discharge: ±2kV, ±4kV Air Discharge: ±2kV, ±4kV, ±8kV	B
Radio Frequency Electromagnetic Field	GB/T 17626.3	3V/m, 80MHz – 2.0GHz, 80%AM@2HZ	A
Burst	GB/T 17626.4	Power Cord: ±1kV (5/50ns, 5kHz)	B
Surge	GB/T 17626.5	Line to Ground: ±2kV Line to Line: ±1kV	B

Radio Frequency Conduction	GB/T 17626.6	Power Cord: 3V/m, 150kHz – 80MHz, 80%AM@1KHZ	A
Power Frequency Magnetic Field	GB/T 17626.8	3A/m, 50Hz	A
Voltage Sag and Interruption	GB/T 17626.11	1 cycle 0%; 5/6 cycles 40%; 25/30 cycles 70%; 250/300 cycles 5%	B C C C
Performance Description: A During the test, the performance is normal within the specification limits. B During the test, the function or performance is temporarily reduced or lost, but it can recover on its own. C During the test, the function or performance is temporarily reduced or lost, and it requires operator intervention or system reset.			

2.7 Disposal

For more information on how to dispose of a device or device components, please contact your local Goldsite Diagnostics Inc. representative.

Chapter 3 Structure of Instrument

3.1 Structure of Instrument

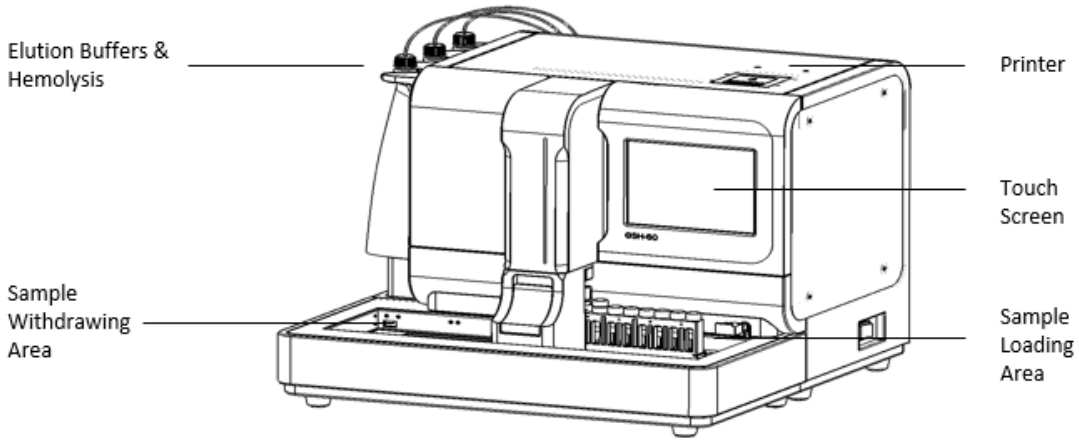

Figure 3-1 Front View of GSH-60

- Touch Screen
  For displaying test information and providing human-computer interaction interface;
- Printer
  For printing test results or other information;
- Elution Buffer and Hemolysis
  Reagent position for HbA1c Elution Buffer A/B/C and Hemolysis;
- Sample Loading Area
  For sample loading, 6 sample racks can be placed, each rack can hold 10 samples;
- Sample Withdrawing Area
  For withdrawing sample when test is completed.

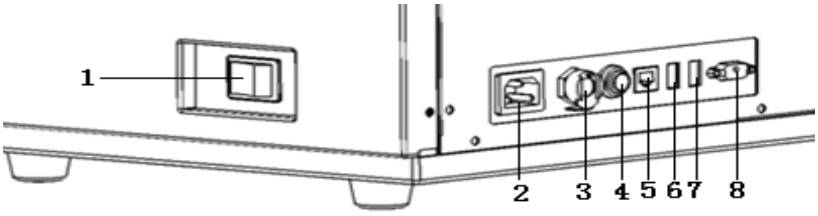

Figure 3-2 Right Rear View of GSH-60

Table 3-1 Components in the Rear Right

1	Power Switch	Main power switch, the status is "|" when working, and the status is "O" when shutting down

2	AC Input Terminal	For power cord connection
3	Waste Outlet	For discharging the waste
4	Waste Sensor Connector	For connecting the waste sensor used to check whether the waste container is full
5	Network Port	For connecting to the host computer LIS to transmit data
6、7	USB Receptacles	For USB flash drive connection which can be used to upgrade software, import and export data files
8	Communication Serial Port	For connecting to an external host computer

3.2 Components Inside Instrument

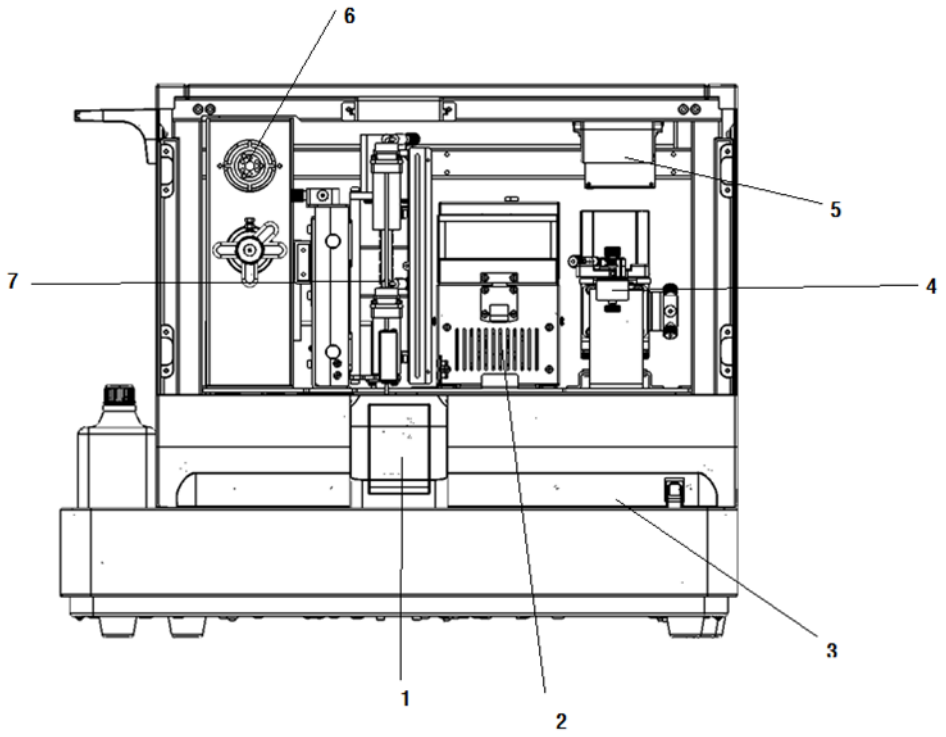

Figure 3-3 Front View inside GSH-60

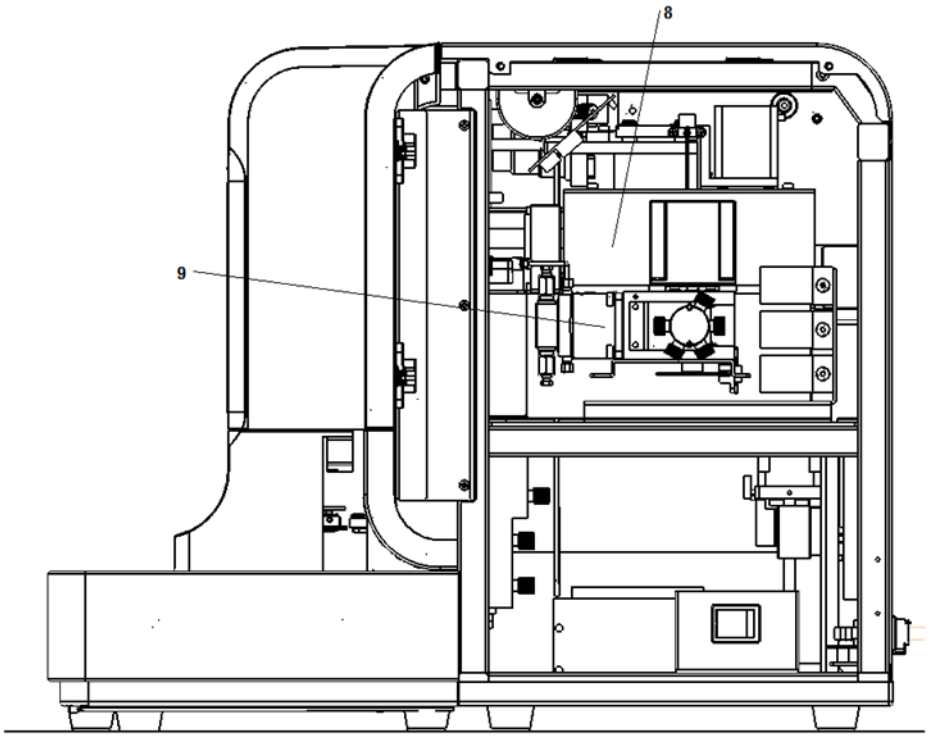

Figure 3-4 Right View inside GSH-60

1 STAT Position

Position for placement of the emergency sample. The position is compatible with specified sample cup and tube.

2 Chromatography Column Oven

The chromatographic column is installed inside the oven. The oven provides a constant temperature environment for the column to ensure that changes in room temperature will not affect the test.

3 Track

Position for placement of sample racks. The track enables continuous and automatic sample loading.

4 Filter

The filter prevents debris such as those from the sample and the pump's sealing cap from entering the chromatography column.

5 Printer

The thermal printer prints the measurement results and instrument parameters.

6 Rotary Diversion Valve

The valve for removing bubbles. The value needs to be opened manually before removing bubbles.

7 Sample Probe

The probe for sampling.

8 Detector

The light source unit (LED) for detecting the absorbance of each component after the sample is separated by the chromatography column.

9 Pump

The pump that delivers the elution buffer for the chromatography column. Within a test cycle (1.0 minute), three types of elution buffers with different concentrations are pumped through the solenoid valve to form a concentration gradient in the column for the separation of various hemoglobin components.

3.3 Connection

3.3.1 Waste Tube Connection

Connect the waste tube to the waste container, and tighten the cap of the container so that the waste tube is firmly inserted into the cap. Then, insert the connector on the other end of the tube into the waste outlet (white) of the instrument. Connect the waste sensor through the waste sensor connector (red).

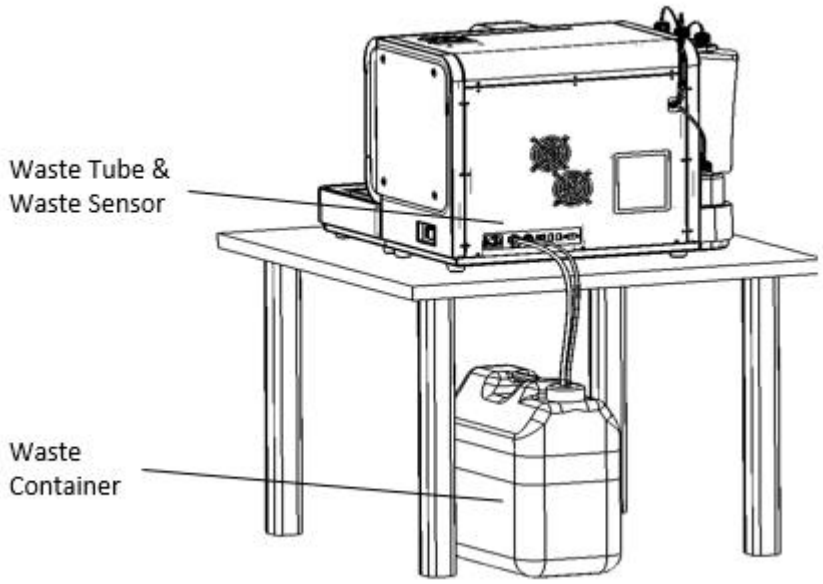

Figure 3-5 Waste Tube Connection

Make sure that the waste outlet is HIGHER than the waste liquid surface. After connection, check whether the waste tube is loose, broken, twisted, etc., and whether the waste is discharged smoothly. The sample test may be affected if the waste cannot be discharged smoothly.

Caution:

The waste is potentially hazardous. Always wear protective gloves. Wash with large amount of water when the skin touches the liquid.

3.3.2 Elution Buffer Tube Connection

There are 4 different colored tubes on the left of the instrument, which are used to connect to the elution buffer A, B, C and Hemolysis respectively (refer to Table 3-2). Insert the correct tube into the corresponding elution buffer pack and tighten the cap.

Table 3-2 Colors of the connection tubes

Tube for connection to	Color
Elution Buffer A	Green
Elution Buffer B	Red
Elution Buffer C	Yellow
Hemolysis	White

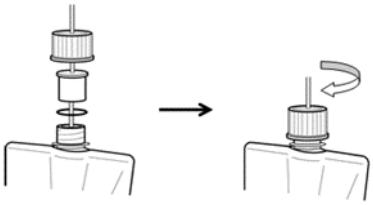

Figure 3-6 Elution Buffer Tube Connection

Please note that the tube may not reach the bottom of the container if it is bent, so be sure to straighten the tube before inserting it. Be sure to insert the tube into the bottom.

Refer to Chapter 6, *6.4 Replacement of Elution Buffers and Hemolysis* for detailed reagent installation procedures.

Caution:

The elution buffer and hemolysis are potentially hazardous. Always wear protective gloves. Wash with large amount of water when the skin touches the liquid.

3.3.3 Hemolysis Tube Connection

Remove the cap from the bottle of hemolysis, insert the hemolysis tube of the instrument into the bottle, and tighten the cap. Make sure that the tube reaches the bottom of the bottle.

Refer to Chapter 6, *6.4 Replacement of Elution Buffers and Hemolysis* for detailed reagent installation procedures.

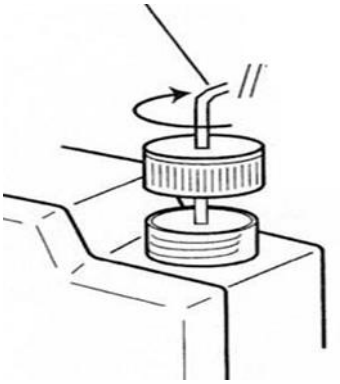

Figure 3-7 Hemolysis Tube Connection

3.3.4 Power

First connect the supplied power cord firmly to the AC input terminal of the instrument. After confirming that the main power switch of the instrument is on the OFF (O side) side, insert the plug into the socket. The power source must be a grounded source.

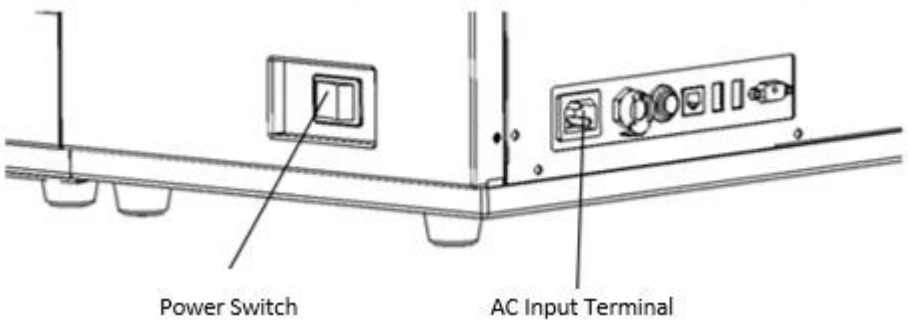

Figure 3-8 Power Cord Connection

Caution:

- Do not share the power supply with other high-power electrical devices (such as refrigerators, air conditioners, etc.).
- Do not touch the power supply with wet hands, which may cause electric shock.
- The instrument must be connected to the grounded power.
- Do not place anything in front of the main power switch so that the power can be turned off quickly in an emergency.
- Leave enough space to ensure that the plug of the power cord can be removed from the AC input terminal.
- Never use a multi-socket or extension cable.

3.4 Chromatography Column

The column is the exclusive product of GSH-60. Do not use the columns of any other instruments.

When obtaining a new column, first check the packaging and the appearance of the column. If abnormality is found, please do not use it and contact Goldsite Diagnostics Inc. as soon as possible. Refer to Chapter 6, *6.6 Replacement of Column* for the column installation procedures.

Chapter 4 Screen Operation

4.1 Main Screen

The main screen is the initial screen displayed after the instrument is started.

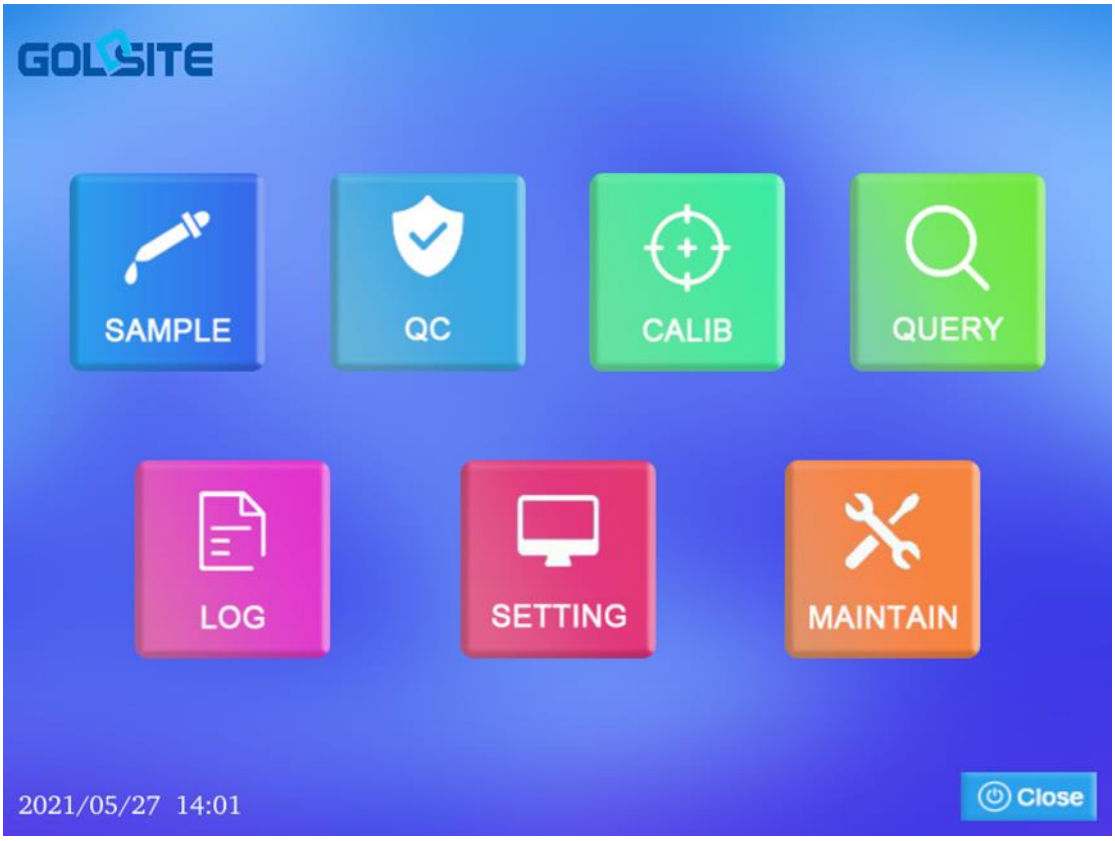

Figure 4-1 Main Screen

The following are displayed on the main screen:

(1) SAMPLE
Screen for samples tests.

(2) QC
Screen for quality control tests which is used to confirm that the instrument is working properly.

(3) CALIB
Screen for calibration.

(4) QUERY
Screen for query of the sample test results, quality control test results, calibration results and error information.

(5) LOG

Screen for viewing the abnormalities and errors recorded during operations.

(6) SETTING

Screen for system settings (time, network, printing, etc.).

(7) MAINTAIN

Screen for maintenance of the instrument, e.g., replacement of the reagents.

(8) Close

Button for shutting down the instrument.

4.2 SAMPLE Screen

The SAMPLE screen is for sample tests. After the instrument is turned on, select **SAMPLE** from the main screen to enter this screen.



Figure 4-2 SAMPLE Screen

- Next SPL No.
  The ID of the next sample to be tested. The automatically generated ID can be edited manually or overwritten by the scanned sample barcode.
- Mode
  Identification methods of the sample container.
- Rack No.
  The placement position of the current sample.

- CALIB
  Displays the equation for calibration of the results.
- Records
  Current test records.
- Curves
  Displays the chromatogram in real-time.
- Textbox (right)
  Displays the test log: test status and warning messages.
- PRESS/TEMP/VOLT
  Pressure, Temperature, and Voltage: monitoring parameters to verify that the instrument is working properly.
- Filter surplus/Column used
  Displays how many times the filter and column have been used and their total service times.
- Reagent bars
  Displays the volume of the remaining reagents.

After powering on, the instrument will enter the liquid path update state. After the update is completed, "**Standby ...**" will be displayed. Place the samples on the sample rack (refer to Chapter 5, *5.7 Sample Container* for more information). Click the **START** button and the sample loading motor will start to work. When the sample rack is detected, it will be pushed to the sampling loading area. The type of the sample will be recognized automatically by the sensor. By default, those contained in blood collection tubes will be recognized as whole blood samples, and those contained in sample cups will be recognized as diluted samples. After being sensed, the sample will be taken up by the sample probe, and the first result will come out after 2 minutes. With subsequent samples being loaded continuously, it will only take one minute to produce a result.

4.3 QC Screen

The QC Screen is for quality control tests. Select **QC** from the main screen to enter this screen.

After long-term use, the analyzer may produce errors. The existence of errors may lead to erroneous or unreliable results. Quality control tests are performed to confirm that the analyzer is working properly and providing reliable results. The measured values should be within the acceptable range stated for the control sample. In order to monitor and evaluate the precision and analytical performance, it is recommended that two controls with high and low values should be tested routinely.

Refer to Chapter 5, *5.6 Quality Control* for the procedures.

After the quality control test is completed, the results will be displayed. The results will indicate whether the measured values are within the acceptable range. You can also query the quality control results in the QUERY screen.

If the test failed multiple times, recalibrate and test the control again.

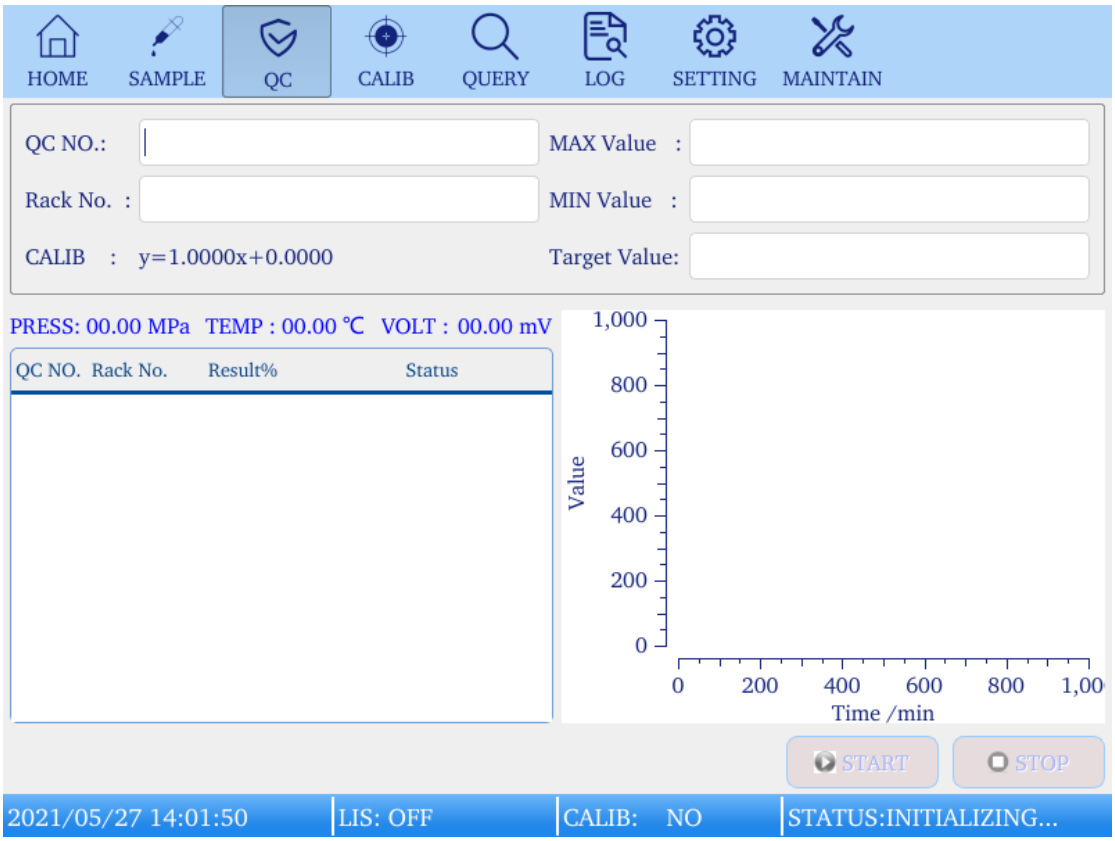

Figure 4-3 QC Screen

4.4 CALIB Screen

The CALIB Screen is for calibration. Select **CALIB** from the main screen to enter this screen.

Calibration Steps:

Select the measuring unit (% for NGSP or mmol/mol for IFCC) → Input the info and the target values of the two calibrators → Click the **START** button to perform the calibration.

After the calibration is completed, the new calibration parameters for the calibration equation will be displayed. For more information about calibration, refer to Chapter 5, *5.5 Calibration*. After recalibration with the same lot of calibrators, the new calibration parameters will overwrite the old ones.



Figure 4-4 CALIB Screen

4.5 QUERY Screen

The QUERY Screen is for query of the sample test results, quality control test results, calibration results and error information. Select **QUERY** from the main screen to enter this screen. All data are stored in the 32 GB SD memory card, and can be printed, edited, sent via LIS, deleted, exported, etc. on this screen.

Set the query time and click **Search** to query the sample results, calibration results, and error information within the set period. All query results will be displayed. Click **Page UP** and **Page Down** to browse through the pages. Hold and slide to select multiple results. The buttons on the right allows the selected results to be sent, exported, edited, etc. The buttons may vary with the tabs of the results (e.g., PARAS only appears in the Calib tab).

- **LIS**
  Send the results to the LIS server. Refer to Chapter 4, *4.7.2 NETWORK* for configuration of LIS connection.
- **PRINT**
  Print the results manually. The printing settings can be changed as described in Chapter 4, *4.7.4 PRINT*.
- **CURVE**
  Display the chromatogram.

- **EXPORT**
  Export the results to a USB flash drive.
- **EDIT**
  Edit the information of results.
- **PARAS**
  Under the Calib tab, this function enables editing of the parameters of the calibration equation (Figure 4-6).
- **DELETE**
  Delete the results.
- **FRESH**
  Display all results.

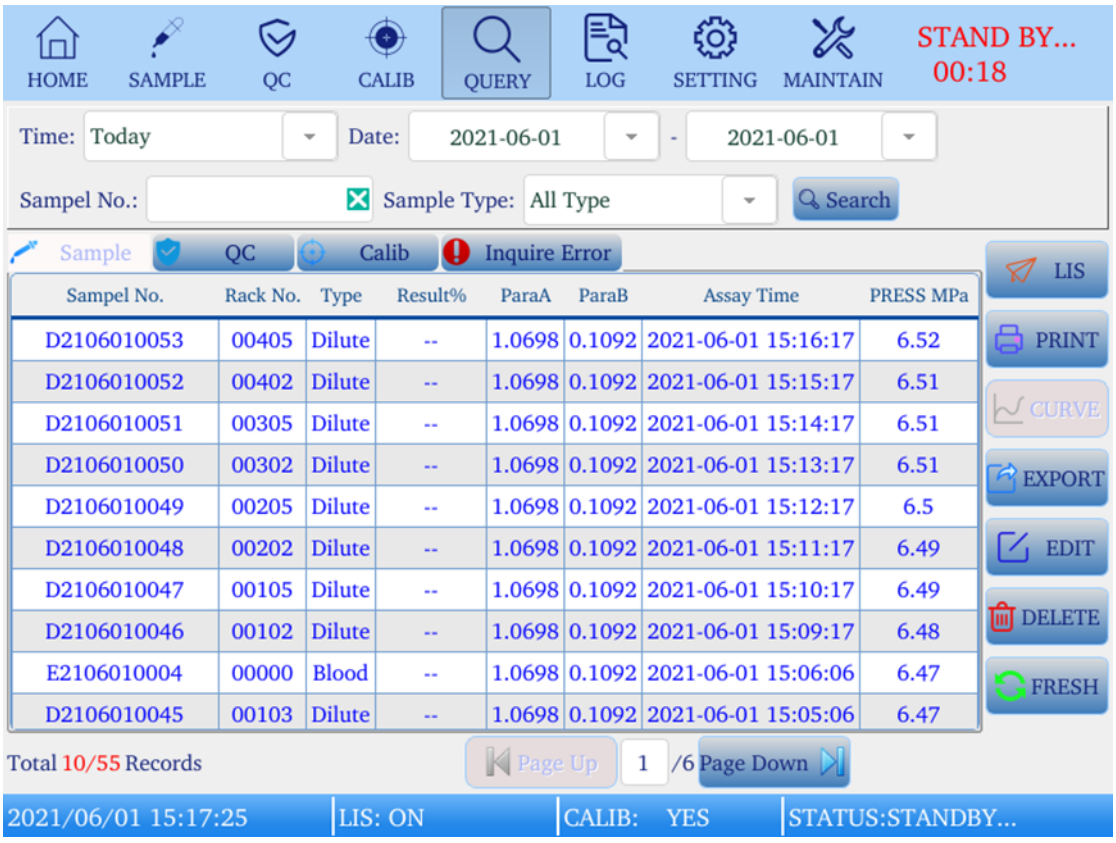

Figure 4-5 QUERY Screen

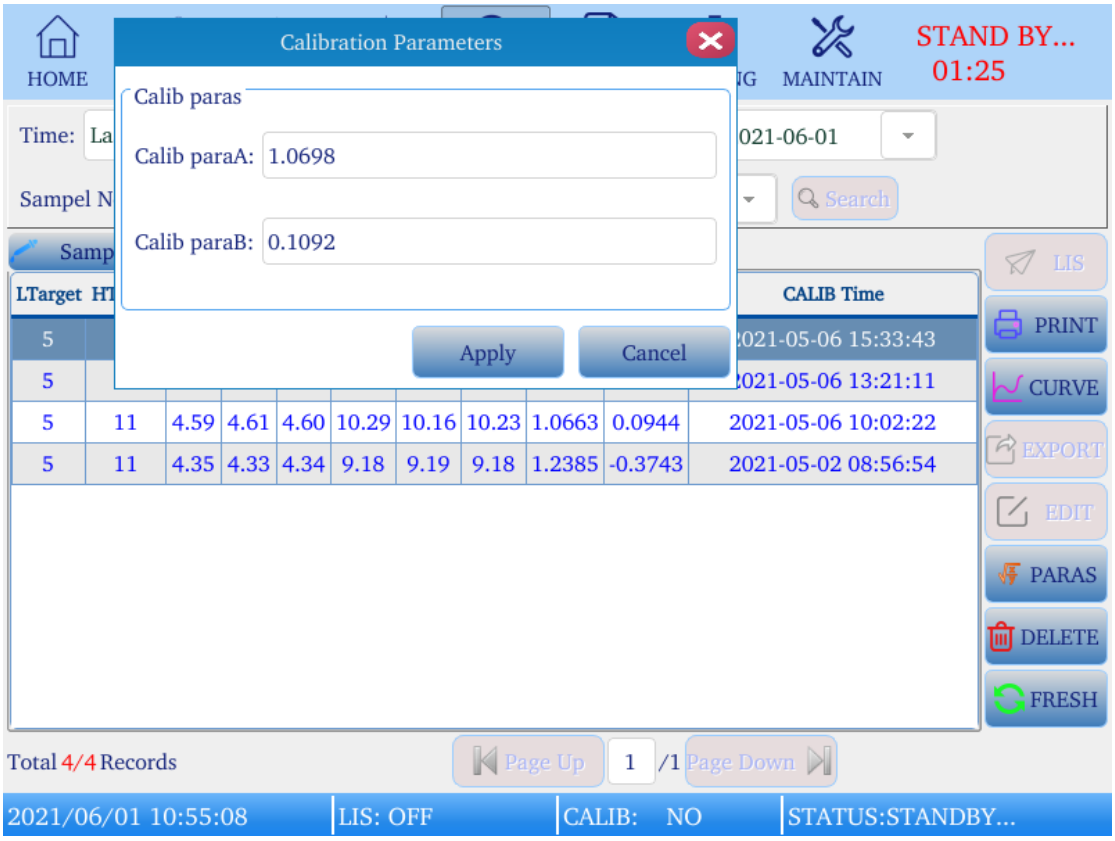

Figure 4-6 Editing the Calibration Parameters

4.6 LOG Screen

The LOG Screen is for viewing the abnormalities and errors recorded during operations. Select **LOG** from the main screen to enter this screen. Select **Current Log** and **History Log** to view the current and historical working status of the instrument, respectively.

The log records various states during the operation of the instrument, including the errors, warnings, and real-time status. This function aims to help locate the problems and also facilitates the after-sales troubleshooting.

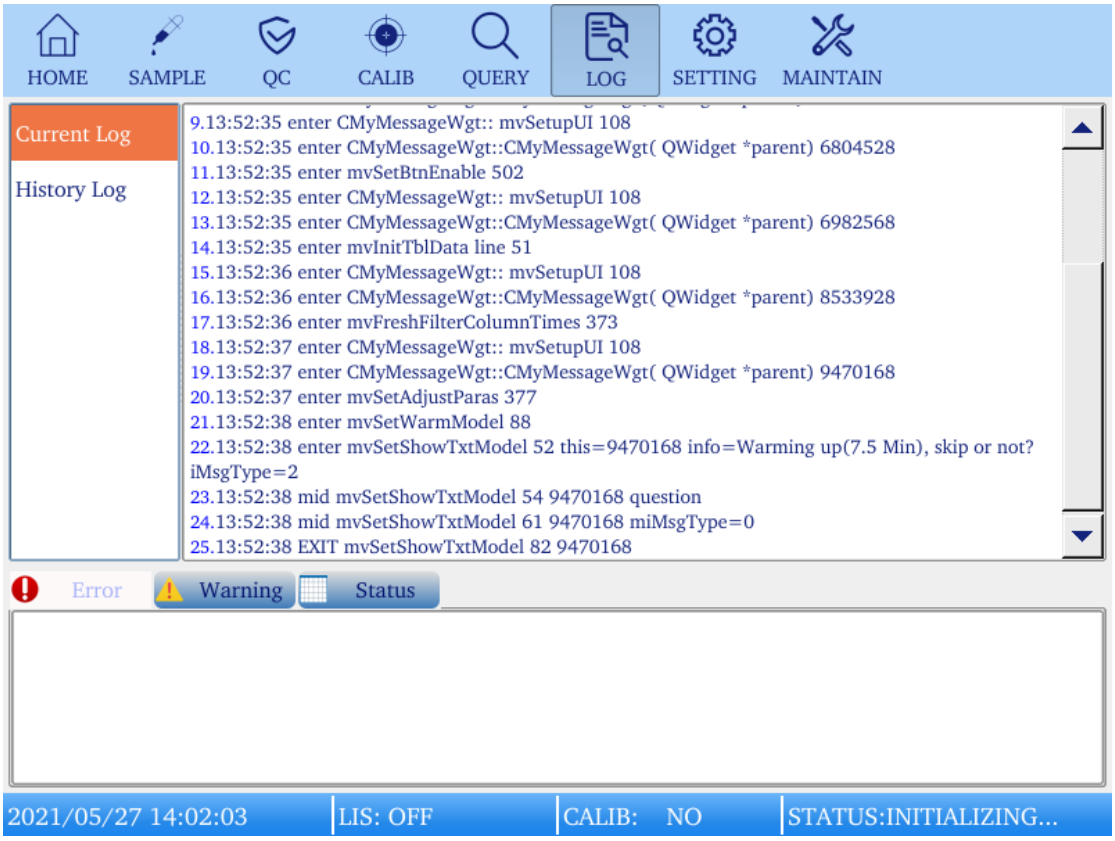

Figure 4-7 LOG Screen

4.7 SETTING Screen

The SETTING Screen is for system settings. Select **SETTING** from the main screen to enter this screen. Select TIME, LIS, CAPACITY, PRINT, AUTOSTART, OTHER, and ABOUT to enter the corresponding setting screens.

4.7.1 TIME

From the SETTING screen, select **TIME** to set the system time**.**

Select the date and time. Hold the arrow keys to select quickly. Click **Update**.

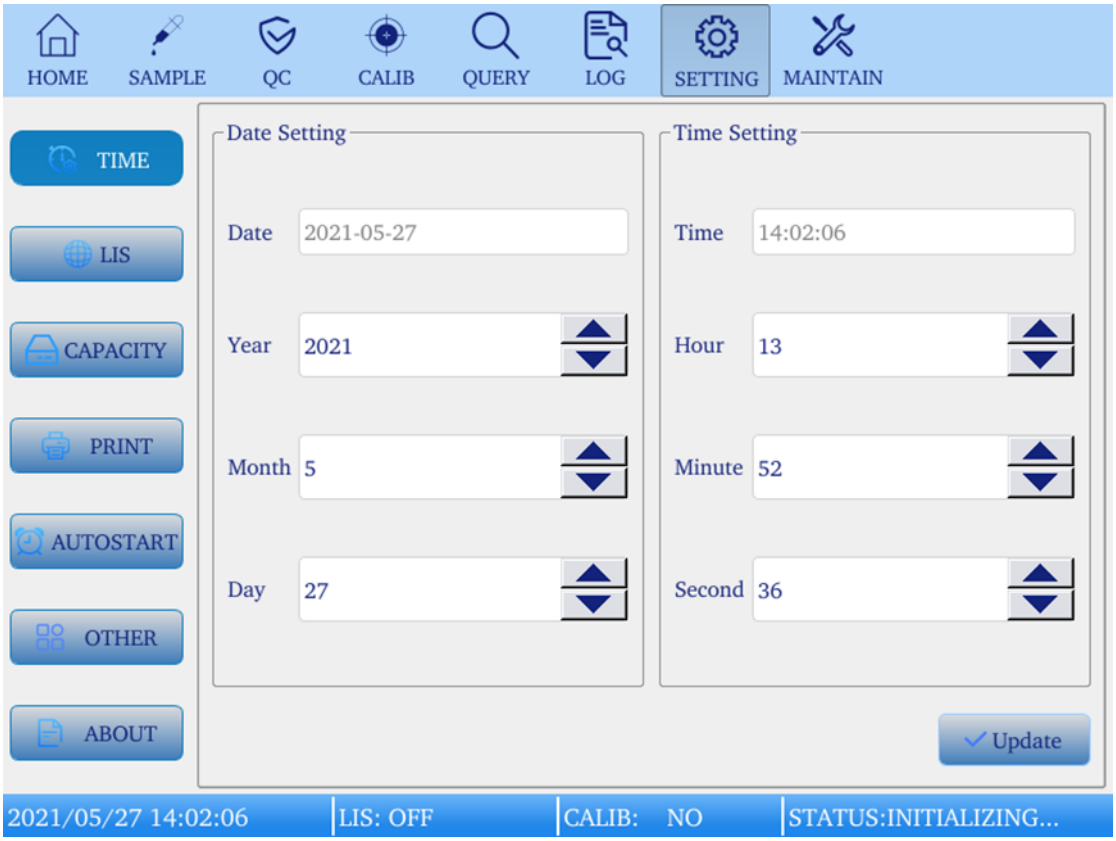

Figure 4-8 SETTING-TIME

4.7.2 LIS

From the SETTING screen, select **LIS** to set the parameters for connecting LIS. You can connect by using either the Serial Ports or the TCP/IP protocol.

If you are connecting via the Serial Port, set the Baud Rate to that used by the LIS server.

If you are connecting via the TCP/IP protocol, accept or input the related information about the Local Address, Mask, and Gateway, etc. Server Addr and Port are the address and the receiving port of the LIS server, respectively.

Click **OK**, the system will start to connect. After receiving the return status code, a connection status message will be displayed. “LIS: ON” will be displayed on the status bar if the connection is successful. Otherwise, "LIS: OFF" will be displayed.

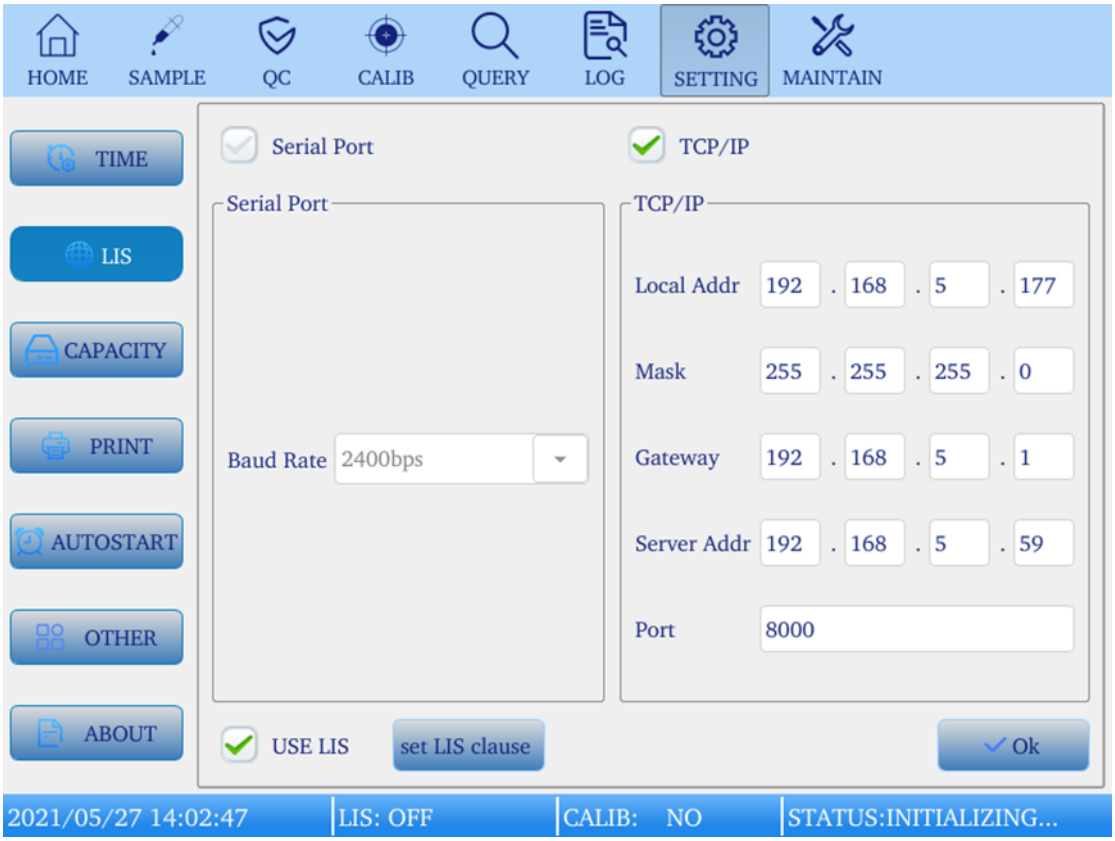

Figure 4-9 SETTING-LIS

4.7.3 CAPACITY

From the SETTING screen, select **CAPACITY** to manage the stored data.

- **Import**
  Import backup data from a USB flash drive.
- **Export**
  Export local data to a USB flash drive.
- **Delete**
  Delete selected data to free up the space. Be sure to back up the data before deleting.
- **Clean**
  Delete all local data.
- **Refresh**
  Display all local data.

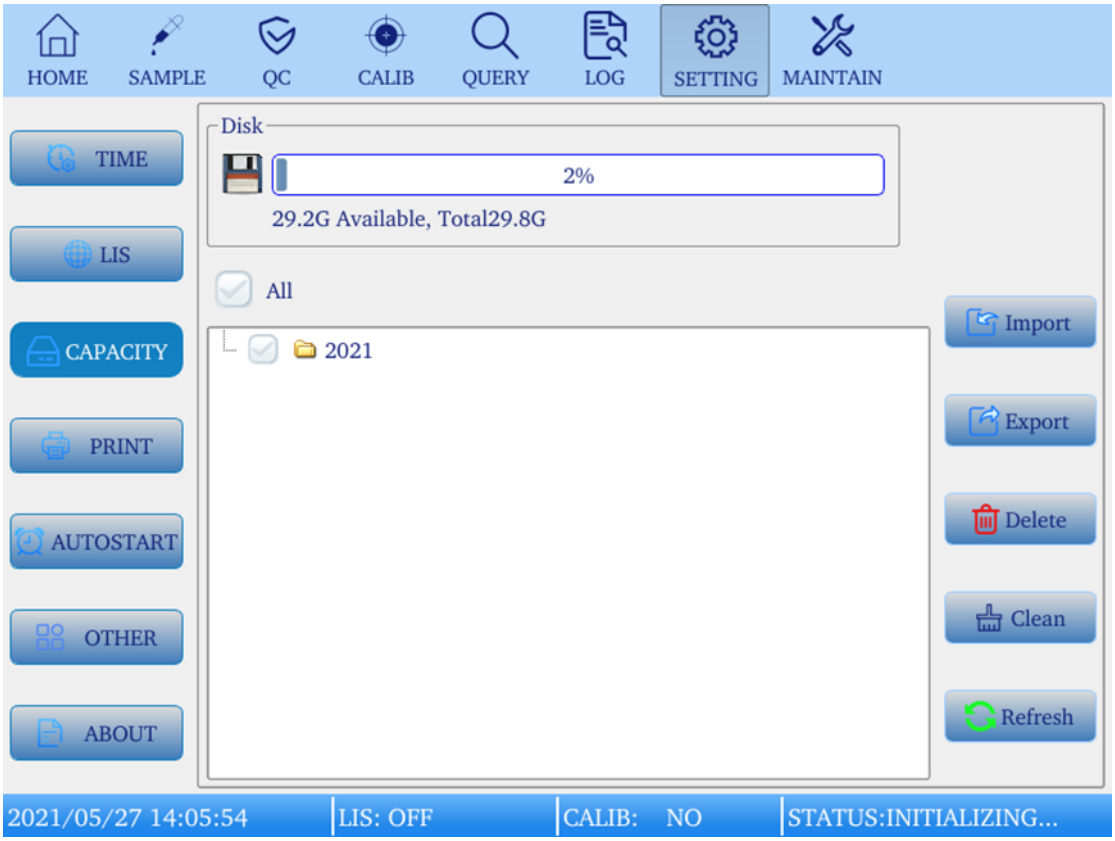

Figure 4-10 SETTING-CAPACITY

4.7.4 PRINT

From the SETTING screen, select **PRINT** to set the printing preferences.

- Title
  Title input here will be used and printed as the header of test report.
- Code
  Two printing codes are available: Unicode or GBK.
- Content
  Set the contents to be printed: “Basic info” or “Detail Info”. Select “Detail Info” to include the percentage of each hemoglobin component in the test report.
- Result
  Set the measuring unit: NGSP (%), IFCC (mmol/mol), NGSP (%) + IFCC (mmol/mol), IFCC (mmol/mol) + NGSP (%)
- Print Time
  Enable “After Assay” to print the test report automatically after a test is completed. Or disable this option to print the result manually in the QUERY screen.
- Curve Direction
  The orientation of the chromatogram.

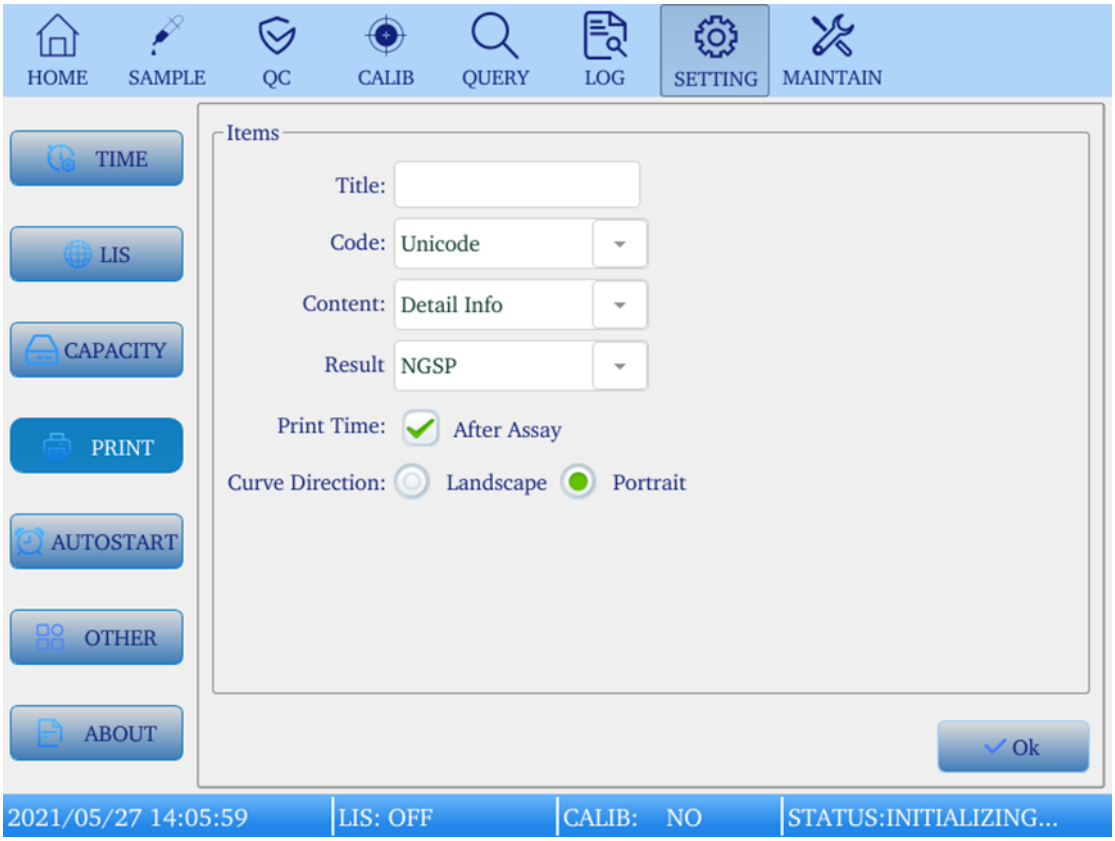

Figure 4-11 SETTING-PRINT

4.7.5 AUTOSTART

The instrument needs a certain amount of time (about 8 minutes) to initialize and warm up. You can arrange a scheduled start up of the instrument to save the time.

From the SETTING screen, select **AUTOSTART**.

Select when you want the instrument to start up and the way to repeat this schedule. Click the **Set restart time first!** switch to the right to activate this function.

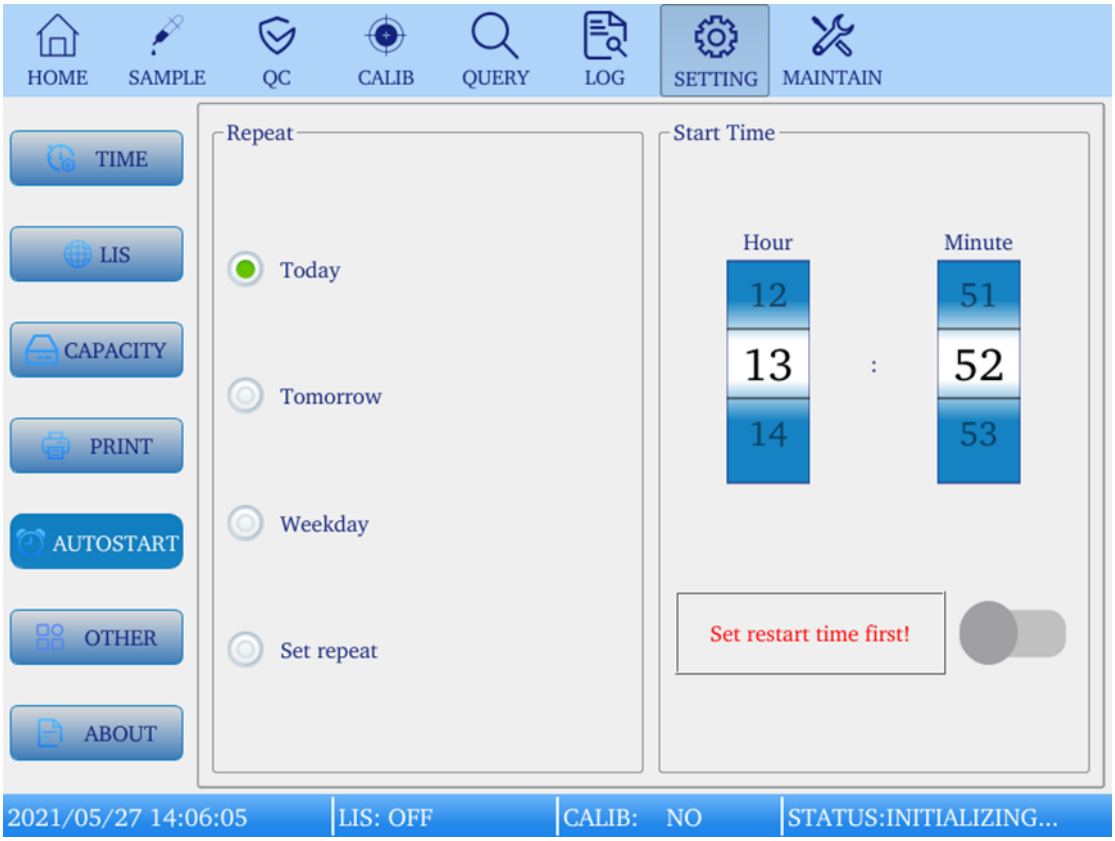

Figure 4-12 SETTING-AUTOSTART

4.7.6 OTHER

- Language
  Set the system language to be Chinese or English. The change is effective after restart.
- orbit
  Check “Circle Assay” to enable automatically repeated loading and testing of the same samples.
- Touch Sound
  Click the switch to enable or disable the touch sound.
- Backlight
  Set the brightness of the screen.

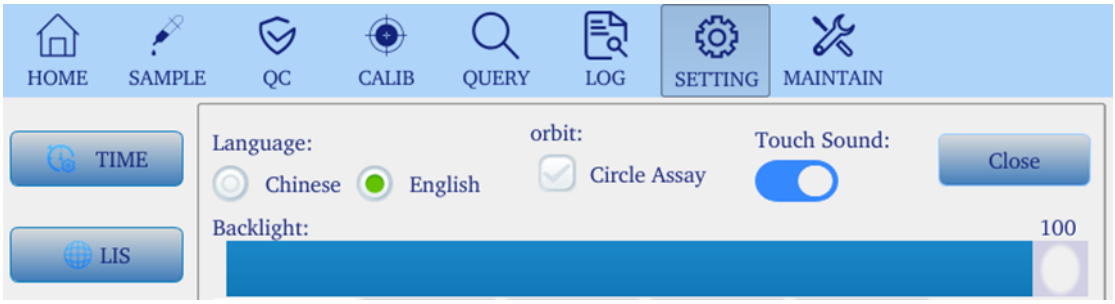

Figure 4-13 SETTING-OTHER

4.7.7 ABOUT

To see the software version, select **ABOUT** from the SETTING screen.



Figure 4-14 SETTING-ABOUT

4.8 MAINTAIN Screen

The MAINTAIN Screen for maintenance of the instrument, e.g., replacement of the reagents, columns, etc. Select **MAINTAIN** from the main screen to enter this screen.

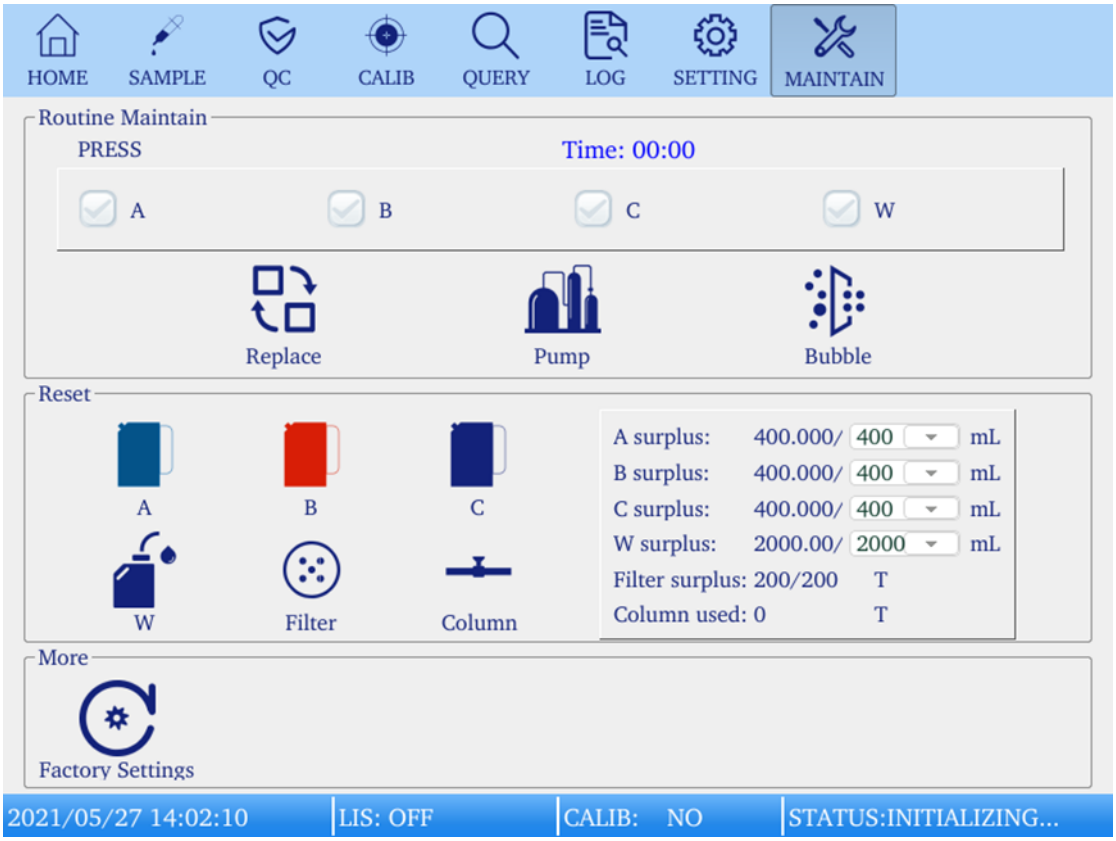

Figure 4-15 MAINTAIN Screen

4.8.1 Routine Maintain

- **Replace**
  The function is used when replacing the reagents. After a reagent or multiple reagents have been replaced, check the corresponding reagent(s), and click **Replace** to refill and wash the corresponding tube(s). For detailed description and procedures, refer to Chapter 6 for more information.
- **Pump**
  Start the pump manually. This operation is performed when replacing the column or an abnormity related to pressure has occurred. To start the pump, check one or multiple elution buffers (A or B or C) above, and click **Pump**. Refer to Chapter 6 for more information.
- **Bubble**
  Click **Bubble** to remove air bubbles. This function is used when replacing the filter or when the pressure cannot rise or becomes unstable. For detailed description and procedures, refer to Chapter 6.

4.8.2 Reset

Click corresponding buttons to reset the usage percentage of the elution buffers (A, B, C), hemolysis (W), filter, and column. Refer to the right panel for all current usage percentages.

4.9 Close

When all the tests are completed, you can power off the instrument. Click **Close** at the bottom right of the home screen. After the shutdown is completed, turn off the power switch on the rear right of the instrument.

Chapter 5 Measurement Procedures

5.1 Principle of Measurement

High Performance Liquid Chromatography (HPLC) is applied. Based on the charge differences, the instrument separates a total of six hemoglobin components including HbA1c by using the cation exchange column and three types of elution buffer with different salt concentrations. The absorbance of each component was monitored to determine the area of each absorbance peak. The percentage of each peak in relation to the total area is calculated as their concentrations (%). When the analysis is completed, the chromatogram and the results will be printed out.

5.2 Power On

The main power switch is located on the rear right of the instrument. The power is ON when “I” side is pressed, and is OFF when “O” side is pressed.

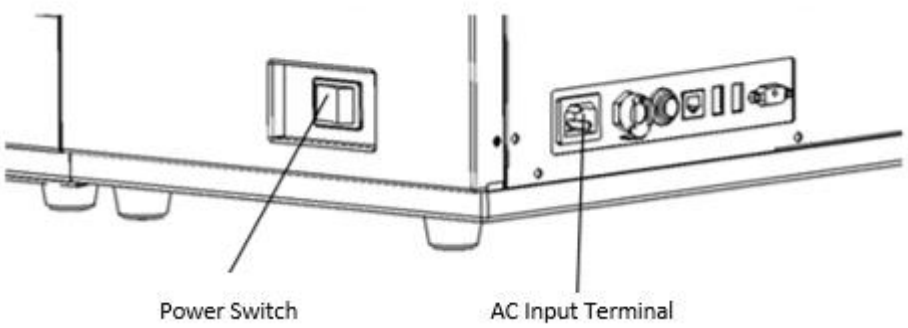

Figure 5-1 Power On

Caution:

Do not touch the power, keys and screen with wet hands, which may cause electric shock.

Steps:

(1) Turn on the power switch and the initializing screen will be displayed. The instrument will automatically detect the internal circuit.



Figure 5-2 Initializing Screen

(2) Next, the instrument will start to warm up (about 8 minutes): the instrument will automatically perform the pump cleaning, injection of elution buffers, initial cleaning of the tubes, etc., before entering the standby state.

5.3 Working States of the Instrument

5.3.1 Warming Up

After the instrument is turned on, the system automatically enters the 8-minute warming up state. Firstly, the instrument will perform the pump cleaning which consumes 5 mL of hemolysis. Next, elution buffers B and A, 5 mL each, will be used to wash their tubes (elution buffer C has a high salt concentration, so its tube does not require washing). The column will then be balanced. After all these procedures have been completed, the instrument enters the standby state.

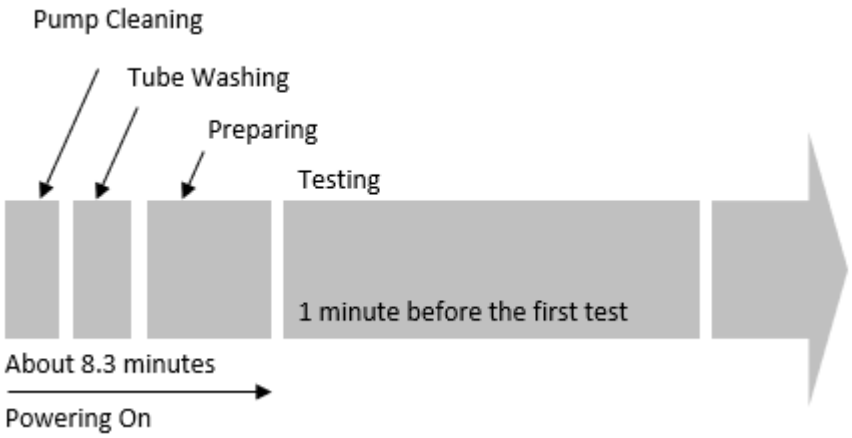

Figure 5-3 Warming Up Process

5.3.2 Standby State

In the standby state, the system is waiting for testing. In this state, the pump stops working and does not consume the elution buffers. If the standby state lasts for more than 90 minutes, the system will wash the tubes with about 5 mL of elution buffers A and B before restarting the test to prevent crystal deposition. The washing takes approximately 1 minute.

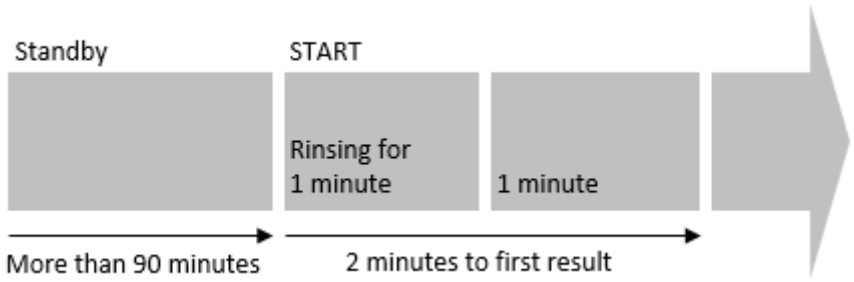

Figure 5-4 Test After More Than 90 Minutes of Standby

5.3.3 Testing

After placing the calibrator / quality control / samples on the sample rack, click **START** to start the measurement. The system enters the testing state. The sample rack will be transported by the track, and the sensor will automatically detect the type of the sample cup. If the sample is recognized as whole blood (i.e., contained in a blood collection tube), it will be diluted automatically with the hemolysis.

Before the sample analysis, it takes the system 1 minute to prepare the tubes. As a result, it takes 2 minutes to produce the first result. After that, the analysis of each subsequent sample will be finished within 1 minute and the result report will be printed.

5.3.4 Washing

After all tests are completed and no subsequent sample rack is detected (or a blank sample rack is detected), the system enters the washing state. In this state, the system automatically delivers elution buffers C and A for 2.5 minutes each to wash the tubes and column. After the washing, the pump cleaning will be performed (which consumes 5 mL of hemolysis) to remove the dirt and salt from column plunger. Then, the system returns to the standby state.

Although you can click **STOP** to cancel the washing and enter the standby state directly, we do not recommend doing so. The washing helps remove carryover in the tubes and minimize interference with the following test. Without sufficient washing, the service life of the column

may be shortened.

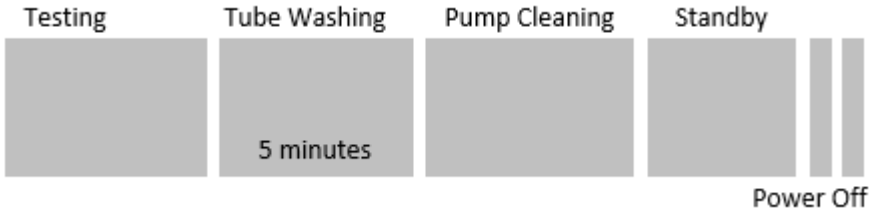

Figure 5-5 Washing State

5.4 Preparing for Testing

Before testing, check the following:

(1) Calibration Status

The CALIB on the status bar must be in a status of YES. If the status is NO, the calibration should be performed to establish the parameters of the calibration equation so that the instrument can provide accurate and reliable results. Refer to Chapter 5, *5.5 Calibration* for the calibration procedures.

(2) Reagents

Make sure all the reagents are sufficient (A, B, C, W). For each sample, one test consumes 0.72 mL of A, 0.63 mL of B, 0.15 mL of C, and 3.95 mL of W.

(3) Others

Waste container, printer paper, data storage space, column service time should be checked.

5.5 Calibration

Before testing, the calibration must be performed to establish the parameters of the two-point calibration equation so that the instrument can provide accurate and reliable results. Recalibration is required in a number of scenarios.

5.5.1 Recalibration Scenarios

Recalibration is required in the scenarios below:

- When the result of the quality control is outside the acceptable range.
- When the column has been replaced.
- When major maintenance has been performed (e.g. a critical part has been replaced; a factory setting parameter has been changed).

5.5.2 Preparation and Procedures

Goldsite HbA1c Calibrator (Cat.No.: HBBZGH, 2 x 0.5 mL, L and H) should be used. Read the product instructions carefully before use.

HbA1c Calibrator is lyophilized and requires reconstitution before use. The unopened HbA1c Calibrator is stable until the expiration date printed on the label when stored at 2 - 8°C and kept away from light. After reconstitution, the reconstituted calibrator is stable at room temperature for 2 hours. It's recommended to aliquot the reconstituted calibrator into single-use packs and store them at - 20°C. These single-use packs can be stored at - 20°C for up to 3 months. After freezing and thawing, let the mixture reach room temperature, mix the contents well and perform the calibration within 2 hours. The reconstituted calibrator should not be frozen and thawed more than once.

Reconstitution steps: remove the cap and add exactly 0.5 mL of distilled water to each of the two lyophilized calibrators. Allow the materials to stand for 30 minutes to dissolve the contents completely. Gently swirl the vials to mix the contents well.

Dilute the calibrators in two sample cups by mixing 5 µL of each calibrator with 1000 µL of distilled water (dilution factor: 200). Place the two calibrators on a sample rack in the first two positions with the low-level calibrator (L) placed in position one. Place the sample rack in the sample loading area.

Note:
For samples using the sample cup, a minimum of 500 µL is required for testing.

Select **CALIB** from the main screen. Input the target values of the two calibrators in the "Target" field. Click **START** to perform the calibration. After the calibration, the new calibration parameters will be established and displayed.

5.5.3 Calibration Failure

During the calibration, the two calibrators will be analyzed for a total of 5 times. The low-level calibrator will be analyzed 3 times but only the last two results will be used. The high-level calibrator will be analyzed 2 times.

The calibration fails when any of the following occur:

- The two results of the low-level calibrator differ by more than 0.3%.
- The two results of the high-level calibrator differ by more than 0.3%.
- Any deviations from the respective target values are greater than 30%.

The possible causes of the failure are as follows:

- The calibrator was not prepared properly or has become unstable.
- The filter, column or tubes have not been washed properly.
- Abnormal pressure or temperature caused by leakage.

If the calibration fails, replace the column, the filter, and make sure that the tubes are tightly connected, or prepare new calibrators. In addition, make sure a minimum of 400 µL of each calibrator is used, and the calibrators are placed on the sample rack in ascending order with the low-level one placed in position 1. When all these are checked, perform the calibration again.

5.5.4 Calculations of Calibration Parameters

After calibration, the system automatically calculates the calibration parameters (A, B). The parameters will then be used to calibrate the reported HbA1c values in subsequent assays. The following equation shows the relationship between HbA1c results of the measured value and the calibrated value:

$HbA1c_{calibrated} = A \times HbA1c_{measured} + B$

In the above equation, the calibration parameters A and B are derived by applying the following equations:

$A = (CAL2_{target} - CAL1_{target}) / (CAL2_{mean} - CAL1_{mean})$

$B = CAL2_{target} - CAL2_{mean}$

In the above two equations, CAL1 is the low-level calibrator (L), CAL2 is the high-level calibrator (H), mean indicates the average of the two measured results, and target indicates the target value of the calibrator.

5.6 Quality Control

Quality control should be run on a routine basis to confirm that the instrument is working properly and providing reliable results. In addition, the control tests should be done with each new lot of reagent, with each new calibration, with each new column, and done after maintenance or anytime an unexpected result is obtained.

Goldsite HbA1c Control (Cat.No.: HBDM072/HBDM072H) should be used. Read the product instructions carefully before use.

HbA1c Control is lyophilized and requires reconstitution before use. The unopened HbA1c Control is stable until the expiration date printed on the label when stored at 2 - 8°C and kept away from light. After reconstitution, the reconstituted control is stable at room temperature for 2 hours. It's

recommended to aliquot the reconstituted control into single-use packs and store them at - 20°C. These single-use packs can be stored at - 20°C for up to 3 months. After freezing and thawing, let the mixture reach room temperature, mix the contents well and perform the test within 2 hours. The reconstituted control should not be frozen and thawed more than once.

Reconstitution steps: remove the cap and add exactly 0.5 mL of distilled water to the lyophilized control material. Allow the material to stand for 30 minutes to dissolve the contents completely. Gently swirl the vials to mix the contents well.

Dilute the control in a sample cup by mixing 5 µL of control with 1000 µL of distilled water (dilution factor: 200). Place the control on a sample rack in the first position. Place the sample rack in the sample loading area.

Note:
For samples using the sample cup, a minimum of 500 µL is required for testing.

Select **QC** to enter the Quality Control screen → Input the information of the control including the lot number, the upper and lower limits, and the target value → Click **START** to start the quality control test. After the test is completed, the measured value and whether that value is within the acceptable range will be displayed.

The control result may fall outside the acceptable range because:

- Expired elution buffers or hemolysis were used.
- Some of the reagents have run out.
- The control has become unstable.

If any of these occur, correct the errors and re-test the control. Do NOT test patient samples until the control result is within the acceptable range.

5.7 Sample Container

GSH-60 is compatible with two types of sample containers, which are blood collection tube and sample cup.

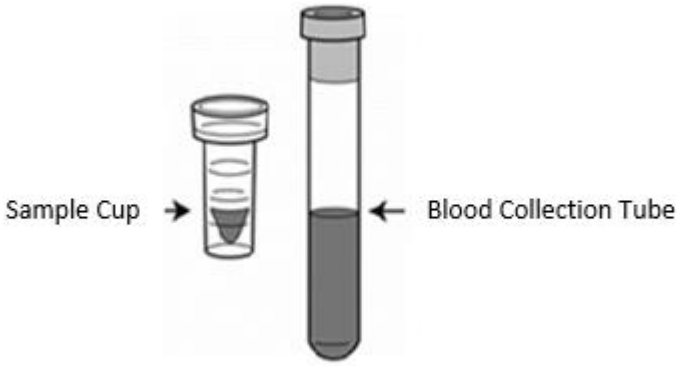

Figure 5-6 Sample Container Types

5.7.1 Blood Collection Tube

Blood collection tubes are be used for testing of whole blood samples. Under the Auto Identify model, the samples contained in blood collection tubes will be automatically recognized as whole blood samples.

The blood collection tube with a rubber stopper can be placed directly on the sample rack. The blood collection tubes that can be used on GSH-60 are those with a diameter of ϕ12 mm – 15 mm and a height of 75 mm or 100 mm.

Do NOT use a blood collection tube with a small diameter. Such tubes may shake during sampling which may cause inaccurate sampling or even bend or break the sample probe.

Before testing, place the blood collection tubes containing the samples on the sample rack.

For samples tested in the blood collection tube, a minimum of 1,000 µL (1 mL) of whole blood is required for testing. It is recommended to invert the tube gently to mix the sample well before placing it on the sample rack.

5.7.2 Sample Cup

Sample cups are used for testing of calibrators, controls, and diluted samples. Under the Auto Identify model, the sample contained in sample cups will be automatically recognized as diluted samples. The recommended dilution factor is 200 for this model, e.g., 5 uL of calibrator/control/sample + 1000 uL of distilled water.

Note: The test result is unaffected by the dilution factor used according to the nature of the test principle. Since the HbA1c result is a ratio, when its numerator and denominator change proportionally with dilution, its value will remain unchanged.

Before testing, place the sample cups containing the diluted samples on the sample rack.

For samples tested in the sample cup, a minimum of 500 μL of diluted sample is required for testing.

5.7.3 Barcode

The instrument is equipped with a sample barcode reader. By scanning the barcode on the sample container (attached in ladder-like orientation), the Sample No. can be input automatically.

When the barcode is not used or cannot be read, the Sample No. will be automatically generated by the system. The format for the generated Sample No. is: yy+mm+dd+xxxx (year + month + day + serial number). The Rack No. for each sample is also automatically generated and the format is aa-bb (rack number + position number).

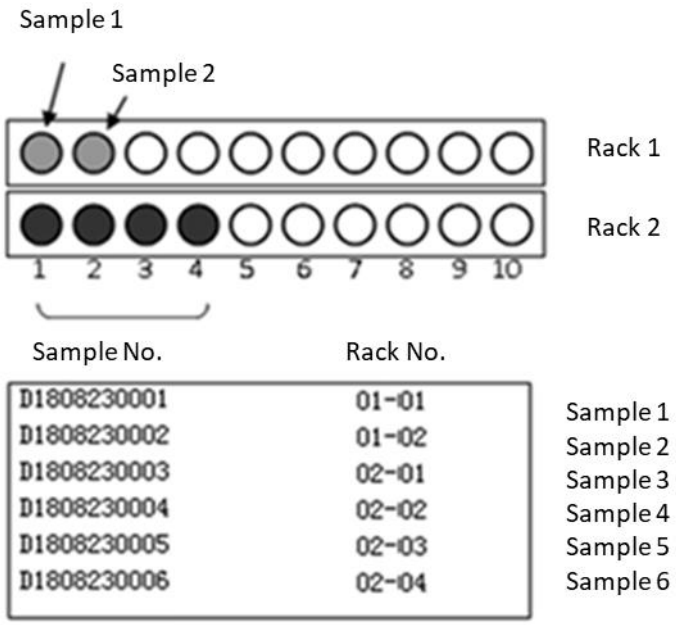

Figure 5-7 Sample No. and Rack No.

5.8 START/STOP a Test

When the sample has been prepared and placed in the sample rack, you are ready to start the test! Place the sample rack in the sample loading area. On the SAMPLE screen, enter and/or check the sample information, and click **START** to start the test. Similarly, you can click **START** on the CALIB and QC screens to start the calibration and quality control test, respectively.

During a test, you can click **STOP** at any time to stop the test. The STOP key can be clicked one or two or three times to enter different states. When clicked for the first time, the instrument will finish analyzing the current sample before entering the washing state; if clicked twice, the instrument will be forced to enter the washing state directly; if clicked three times, the

instrument will be forced to enter the standby state directly.

For the calibration and quality control test, the STOP key can be clicked one or two times. Click **STOP** once, the instrument stop testing and enter the washing state; click STOP twice, the instrument will be forced to enter the standby state directly.

Please note that under any circumstances we do not recommend that you cancel the washing and enter the standby state directly. The washing helps remove carryover in the tubes and minimize interference with the following test. Without sufficient washing, the service life of the column will be shortened.

5.9 Test of an Emergency Sample

GSH-60 allows you to prioritize the test of an emergency/STAT sample. To test an emergency sample:

(1) Place the emergency sample (in blood collection tube or sample cup) into the emergency sample chamber, located in the center of the sample loading area, and close the cover.

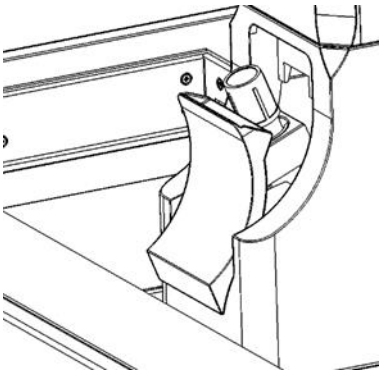

Figure 5-8 Placement of an Emergency Sample

(2) On the SAMPLE screen, select **EMER**, enter or confirm Sample No., select Sample Type and Container Type, and click **START.** The analysis of the emergency sample will begin immediately after the analysis of current sample is completed.

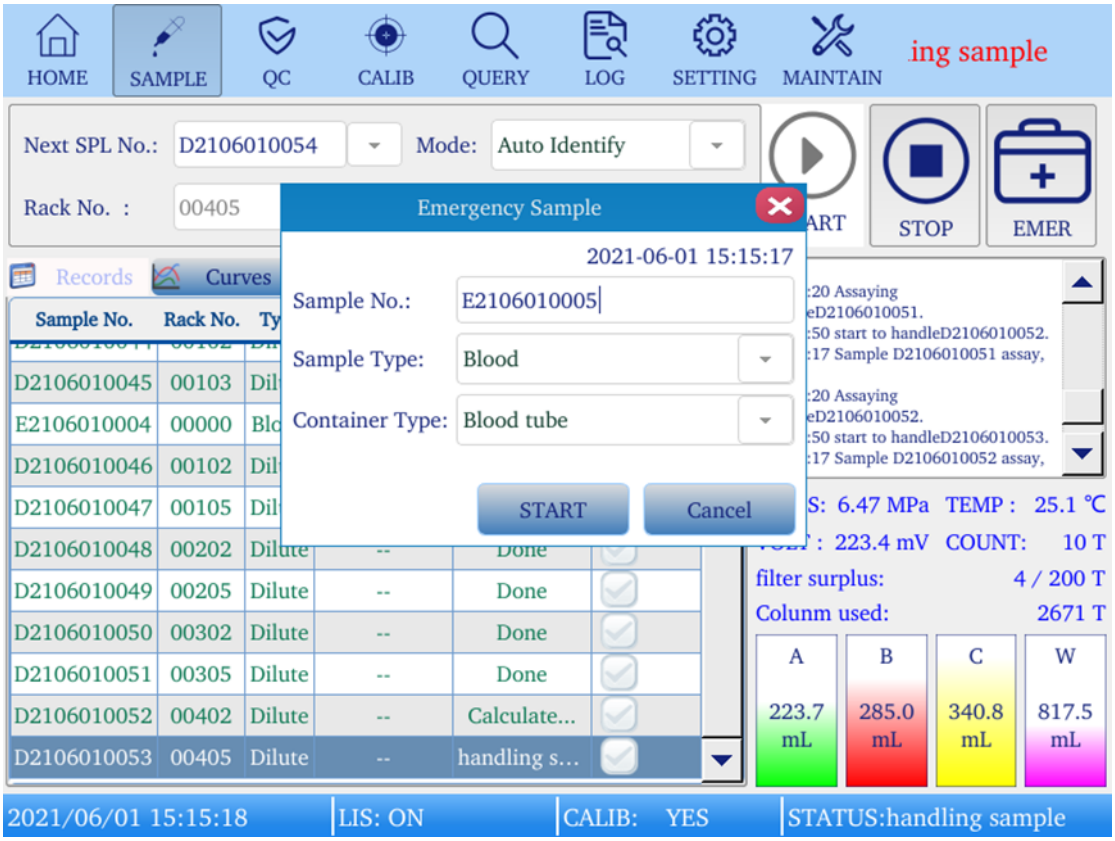

Figure 5-9 Test of an Emergency Sample

5.10 Result Report

After a test has been completed, the result report will be printed out. You can set your printing preferences in SETTING-PRINT (refer to Chapter 4, *4.7.4 PRINT*). The following contents are included in a result report:

- NO.
  Sample No.
- ID
  Shelf No.
- CALIB
  The calibration equation used to calibrate the HbA1c concentration.
- Results of Each Component
  The peak data of each hemoglobin component.
- HbA1c Value
  The calibrated HbA1c concentration. The concentration is based on that of the SA1c. Refer to Chapter 5, *5.5.4 Calculations of Calibration Parameters* for the calibration calculation.
- HbA1 and HbF Values
  The concentrations of HbA1 and HbF. HbA1 consists of A1a, A1b and SA1c.
- Chromatogram
  The graph shows the result of separation of the components over time. The zero-time point

is the time when the sample was injected into the column. The peak of SA1C, i.e. HbA1c, is highlighted with a shadow.



Figure 5-10 Result Report

If the peak patterns appear unusual for multiple samples, e.g., deviated or broken SA1C or A0 peaks, the reason may be that the column and/or reagents have become unstable. Replace the consumables and test again.

If the unusual pattern only appears for one sample, make sure that the sample has not passed its expiry period (whole blood samples with anticoagulants can be stored at 2 – 8°C for up to 14 days or at 25°C for up to 24 hours), and test the sample again. If the unusual pattern appears again, it may be caused by the presence of hemoglobin variants. If this is suspected, the HbA1c result must be interpreted with caution or not reported, and further investigations using alternative methods are encouraged.

Chapter 6 Maintenance

6.1 Precautions for Maintenance

Maintenance work should be performed by trained personnel. Personnel responsible for maintenance work must be trained on maintaining GSH-60 before performing maintenance work in accordance with this manual.

When performing maintenance work, wear protective equipment (gloves, mask, etc.) to avoid injury and infections.

- Waste Disposal
  The used controls, samples, reagents and other consumables are medical waste and should be disposed of properly in accordance with relevant national and local regulations. When handling, wear protective equipment (gloves, mask, etc.). Do NOT touch the waste directly with your hands.

- Cleaning and Disinfection
  It is recommended to perform the cleaning and disinfection of the instrument weekly.
  Do not wash the resin part of the instrument with organic solution such as alcohol, as the organic solution may deform and decolorize of the part with resin.
  To clean the metal part, wipe with an alcohol cloth (75% solution).
  If potentially hazardous materials have leaked on or into the instrument, appropriate disinfection should be performed.
  Do not use disinfectants that may react with the instrument components.

For any questions regarding the repair and maintenance of this instrument, please contact Goldsite Diagnostics Inc. after sales.

6.2 Maintenance Inspection Items

- Daily Inspection Items
  The following items must be checked daily before starting the first test.

Table 6-1 Daily Inspection Checklist

No.	Inspection Item	Action	Chapter
1	Calibration Status	Check CALIB YES/NO on the status bar	5.5
2	Column	Check usage percentage → Replace	6.6
3	Filter	Check usage percentage → Replace	6.7

No.	Inspection Item	Action	Chapter
4	Elution Buffers	Check usage percentage → Replace	6.4
5	Hemolysis	Check usage percentage → Replace	6.4
6	Printer Paper	Check paper remaining → Replace	6.10
7	Waste Container	Check waste → Dispose	3.3.1
8	Tube Leak	Inspect tube leak → Tighten connections	3.3

- Before-assay Inspection Items
  Operators are recommended to check the following items before assay.

Table 6-2 Inspection Checklist to Be Used Before Assay

No.	Inspection Items	Replacement Frequency	Chapter
1	Column	Every 8000 tests*	6.6
2	Filter	Every 200 tests	6.7
3	Reagent tube filters	Every 6 months	6.8

* The number is based on internal validations and good operational practices and may vary depending on the column used, the frequency of tests, and other usage habits and conditions.

- After-sales Inspection Items
  The following items are to be inspected by the after-sales personnel.

Table 6-3 After-sales Inspection Checklist

No.	Inspection/Maintenance Items	Time to Inspect/Maintain/Replace
1	Barcode Reader	Once a year
2	Ending Tag	Once a year
3	Sample Rack	Once a year
4	Sample Sensor	Once a year
5	Sample Probe Lowering Position	Once a year
7	Sampling Unit Fixing Screws	Once a year
8	Valve Screws	Once a year
9	Column Oven Temperature	Once a year
10	Solenoid Valve Function	Once a year
11	Pump Function	Once a year
12	(Replace) Injection Valve Rotor Seal	Once a year

No.	Inspection/Maintenance Items	Time to Inspect/Maintain/Replace
13	(Replace) Rotary Diversion Valve Rotor Seal	Once a year
14	(Replace) Injection Tubes	Once a year
15	(Replace or Clean) Pump Detection Valve	Once a year
16	(Replace) Column Plugs	Once a year
17	(Lubricate) Pump Driving Part	Once a year
18	(Replace) Reagent Syringes	Once a year
20	Sample Probe	Replace when broken or bent
21	Valve Fixing Surface	Replace when dirty or worn
22	Exhaust Seal Valve	Replace when worn

6.3 Manual Tube Washing

Normally (e.g. as in the warming up state; or before first testing; or after long terms of standby, etc.), the tube washing will be performed automatically by the instrument. In such processes, the tubes will be rinsed by the corresponding reagents in order to prepare the tubes for testing and remove the carryover or waste.

On the other hand, when an instrument hasn't been used for a long time, there may be infiltration of air in the tubes, the elution buffers may become concentrated, and the delivery pressure may become unstable, leading to unusual chromatographic patterns or erroneous results. If this is found or suspected, you can perform the tube washing manually. After the washing, the improvement will be observed in most cases.

To wash the tubes manually, follow the steps below:

(1) After the instrument is turned on, wait until it enters the standby state; or when the instrument is turned on, click STOP to enter the standby state.
(2) From the main screen, select **MAINTAIN**.
(3) From the "Routine Maintenance" panel, check the reagent(s) corresponding to the tube(s) to be washed.
(4) Click **Replace** to start the washing. The progress bar will be hidden after the washing is completed.

6.4 Replacement of Elution Buffers and Hemolysis

The reagents (elution buffers and hemolysis) should be replaced as soon as possible when their remaining amounts are not adequate to finish a test. The remaining percentage of each reagent

can be viewed on both the SAMPLE and MAINTAIN screens. It should be noted that the percentages are based on theory only and the actual remaining amounts may be different.

Follow the steps below to replace/install the reagent(s):

(1) After the instrument is turned on, wait until it enters the standby state; or when the instrument is turned on, click **STOP** to enter the standby state.
(2) Remove the cap(s) from the containers of the new elution buffers/hemolysis.
(3) Insert the correct tube(s) into corresponding reagent container(s). Make sure to insert the tube(s) to the bottom (it is recommended to straighten the tube before inserting).
    Green Tube → Elution Buffer A
    Red Tube → Elution Buffer B
    Yellow Tube → Elution Buffer C
    White Tube → Hemolysis
(4) For the elution buffers, gently squeeze the pack(s) by hand to exhaust air in the pack(s).
(5) Make sure to tighten the caps of all reagents (Figures 3-6, 3-7).
(6) From the main screen, select **MAINTAIN** (Figure 4-1).
(7) From the "Routine Maintain" panel (Figure 4-15), check the reagent(s) to be replaced.
(8) Click **Replace**. A progress bar will be displayed.
(9) When the replacement is completed, click the corresponding reagent icon on the "Reset" panel (Figure 4-15) to reset its remaining percentage.

Caution:

- Only use the elution buffers and hemolysis that are exclusive for GSH-60.
- Do NOT use expired reagents.
- Reagents of different lots are not interchangeable. The results may not be reliable if reagents from different lots are mixed or used together.
- All reagents of the kit contain sodium azide as preservative. Take caution when handling them. Avoid ingesting or contacting of the reagents with skin or mucosa. If the contact occurs, wash with large amount of water and seek medical advice. Azide may form explosive metal compounds in lead or copper plumbing. When disposing these reagents, be sure to flush with large amount of water to avoid accumulation of azide.
- The caps of the elution buffers should be tightened as much as possible to keep the reagents inside stable.

6.5 Manual Starting of the Pump

This operation is commonly used to check whether the pump pressure is normal after replacement of the column or filter (6.6 and 6.7). In addition, you can also perform this operation as a preliminary solution when the pressure or chromatographic pattern becomes abnormal or quality control/calibration fails repeatedly during routine measurement work.

Follow the steps below to start the pump manually:

(1) Turn on the instrument and wait until it enters the standby state; or when the instrument is turned on, click STOP to enter the standby state.
(2) From the main screen, select **MAINTAIN**.
(3) From the “Routine Maintain” panel, check any one of the elution buffers, e.g. A, and then click **Pump**.
(4) Check whether the pump pressure rises and becomes stable rapidly.
(5) Click **Pump** again to stop the pump.

6.6 Replacement of Column

The column should be replaced when:

- the pressure is abnormal and there is no improvement after starting the pump manually and replacement of the filter.
- unusual chromatographic patterns appear continuously for multiple samples, e.g., the SA1c peak is unusually broad or splits into two peaks.
- after recalibration, the quality control results are still outside the acceptable range.
- the calibration fails multiple times.

Follow the steps below to replace/install the column:

(1) Remove the fixing plugs from both ends of the new column. Save the fixing plugs for future use since they will be needed when the column is removed and stored.
(2) Turn on the instrument and wait until it enters the standby state; or when the instrument is turned on, click STOP to enter the standby state.
(3) After confirming that the instrument has stopped delivering liquids, open the front cover on the right.
(4) Open the column oven (Figure 3-3), disconnect the tubes at both ends of the used column, and remove the used column.
(5) Refer to the arrow label on the new column and make sure the direction is the same as the liquid flow direction (which should point to the left “←”). Then, connect and tighten the screw on the inlet end of the new column (Figure 6-1).
(6) Place a wiping paper at the outlet end of the new column to prevent the liquid flowing out from leaking to the analyzer.

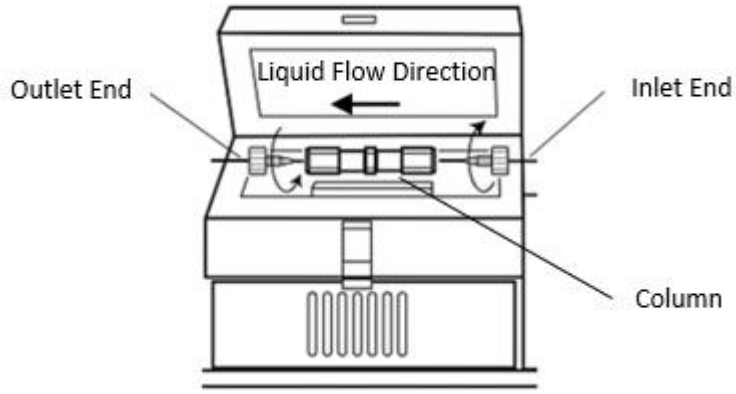

Figure 6-1 Replacement of Column

(7) From the main screen, select **MAINTAIN**.
(8) From the "Routine Maintain" panel, check any one of the elution buffers, e.g. A, and then click **Pump**.
(9) After confirming that there is liquid flowing out from outlet end of the column, click **Pump** again stop the pump.
(10) Connect and tighten the screw on the outlet end of the column (Figure 6-1).
(11) From the "Routine Maintain" panel, check one of the elution buffers, e.g. A, and click **Pump** to start the pump again. Check whether the pressure rises and becomes stable rapidly and that there is no liquid leakage at both ends of the column. Then click **Pump** again to stop the pump.
Note: when everything is fine but the pressure cannot rise and become stable, proceed with the bubble removing steps as described in Chapter 6, *6.9 Removing Air Bubbles*.
(12) Close the column oven. Then, close the front cover.
(13) From the "Reset" panel, click the Column icon to reset the column's service times.

Cautions:

- After replacing the column, perform multiple measurements on dummy samples and check the chromatogram.
- The column must be used in combination with the elution buffers of the same lot. The HbA1c Elution Buffer C can be used in combination with columns of any lots.
- The column must deliver the liquid in the direction of the arrow indicated on the label on the column.
- When the column is not used for a long time (more than 1 week), remove the column from the instrument, reattach the fixing plugs to prevent the inside of the column from drying, and store it in a dark place (2-30°C).
- Protect the column from shock or vibration.
- During the measurement, when the pressure is abnormally high (Mpa higher than the pressure at the beginning of use), replace the filter. If the pressure still does not drop, replace the column.

6.7 Replacement of Filter

The filter (Figure 3-3) prevents debris such as those from the sample and helps extend the service life of the column. The filter should be replaced when:

- it has been used for 200 times. The used times can be viewed on the MAINTAIN screen: on the right side of the “Reset” panel.
- the pressure is abnormally high during measurement (4 Mpa higher than the pressure at the beginning of use).

Caution:

The used filter has been in contact with blood samples and should be disposed of properly as medical waste in accordance with relevant national and local regulations. When handling, wear protective equipment (gloves, mask, etc.). Do NOT touch the filter directly with your hands.

Follow the steps below to replace the filter:

(1) Turn on the instrument and wait until it enters the standby state; or when the instrument is turned on, click STOP to enter the standby state.
(2) After confirming that the instrument has stopped delivering liquids, open the front cover on the right.
(3) Turn the holder handle counterclockwise to loosen and remove the filter holder (Figure 6-2).
(4) Remove the used filter from the holder.

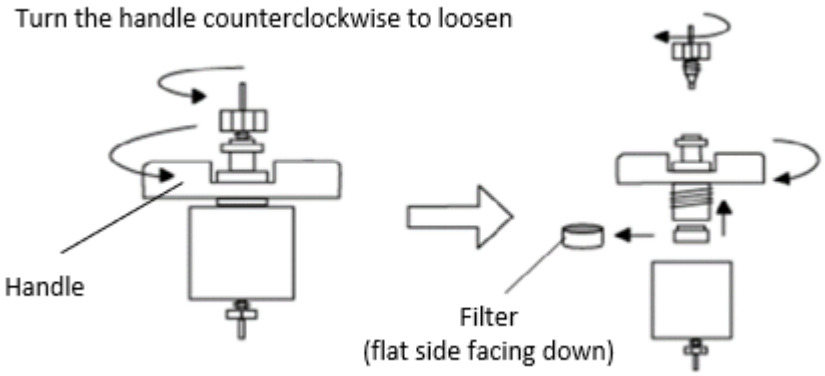

Figure 6-2 Replacement of Filter

(5) Replace a new filter with the uneven side facing up (i.e., the flat side facing down).
(6) Turn the holder handle clockwise to tighten the holder as much as possible.
(7) From the main screen, select **MAINTAIN**.
(8) From the “Routine Maintain” panel, check one of the elution buffers, e.g. A, and click **Pump**

to start the pump. Check whether the pressure rises and becomes stable rapidly and that there is no liquid leakage around the filter holder. Then click **Pump** again to stop the pump. Note: when everything is fine but the pressure cannot rise and become stable, proceed with the bubble removing steps as described in Chapter 6, 6.9 Removing Air Bubbles.

(9) Close the front cover.

(10) From the “Reset” panel, click the Filter icon to reset the filter’s used times.

6.8 Replacement of Reagent Tube Filters

The reagent tube filters are attached to the ends of the reagent tubes and are used to remove dirt. These filters should be replaced regularly to ensure that the reagents are delivered properly.

The filters for ALL reagent tubes should be replaced at the SAME time. The reagent tube filters are disposable and CANNOT be reused.



Figure 6-3 Reagent Tube Filters

Follow the steps below to replace the reagent tube filters:

(1) Turn on the instrument and wait until it enters the standby state; or when the instrument is turned on, click **STOP** to enter the standby state.

(2) Remove the caps and tubes from the reagents.

(3) Remove the used reagent tube filters.

(4) Replace the new filters.

(5) Insert the tubes back to the reagents and tighten the reagent caps

(6) From the main screen, select **MAINTAIN**.

(7) From the “Routine Maintenance” panel, check all the reagents, and click **Replace** to wash the new filters.

(8) After the washing is completed, the progress bar will be hidden.

6.9 Removing Air Bubbles

When testing the pump pressure after replacement of column or filter, if everything is fine but the pressure cannot rise and become stable, it may indicate that there is infiltration of air (bubbles) in the pump. If this is suspected, it is recommended to proceed with the following steps to remove the air bubbles.

(1) Turn on the instrument and wait until it enters the standby state; or when the instrument is turned on, click STOP to enter the standby state.
(2) From the main screen, select **MAINTAIN.**
(3) From the “Routine Maintenance” panel, click **Bubble**.
(4) A confirmation message will be displayed prompting you to open the pump valve manually.
(5) To open the valve, open the front cover on the left, turn the valve handle counterclockwise 90 degrees. Do NOT rotate more than 90 degrees. Click **Ok**.
(6) After the removing process is completed, close the valve by turning the handle clockwise to its original position. Close the front cover.

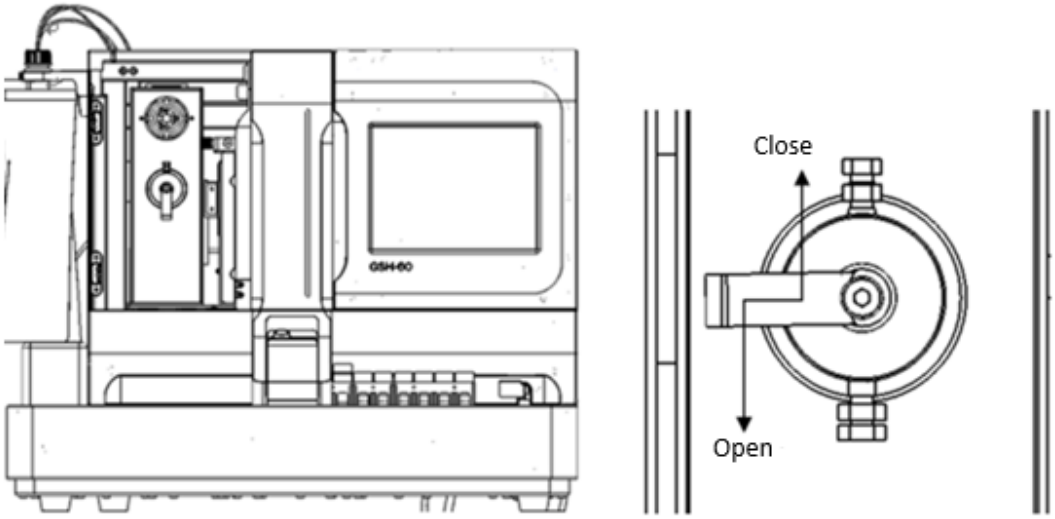

Figure 6-4 Pump Valve

(7) To test whether the bubbles have been removed, check one of the elution buffers, e.g. A, from the “Routine Maintain” panel, and click **Pump** to start the pump. Check whether the pressure rises and becomes stable rapidly.
(8) If the pressure still cannot rise, repeat steps (3) – (7).

6.10 Replacement of Printer Paper

The printer paper roll designed for GSH-60 has a length of 42 m and a width of 60 mm. With the default printing preference, a roll of printer paper can be used to print test reports for approximately 350 samples.

Follow the steps below to replace/install the printer paper:

(1) Open the printer cover.
(2) Removed the used paper roll core if any, insert the new printer paper as shown in Figure 6-5.



Figure 6-5 Replacement of Printer Paper

(3) Pull out some paper and close the printer cover.

Chapter 7 Troubleshooting

7.1 Precautions for Troubleshooting

7.1.1 Column

- Read the column instructions and the relevant contents in this manual carefully.
- Only use the column that is exclusive for GSH-60.
- Protect the column from shock or vibration.
- The column must be used in combination with the elution buffers of the same lot. The HbA1c Elution Buffer C can be used in combination with columns of any lots.
- Do NOT disassemble the column.

7.1.2 Elution Buffers

- Read the reagent instructions and the relevant contents in this manual carefully.
- Only use the elution buffers that are exclusive for GSH-60. Do NOT use expired reagents.
- The elution buffers (A and B) must be used in combination with the column of the same lot. The HbA1c Elution Buffer C can be used in combination with columns of any lots.

7.1.3 Hemolysis

- Read the reagent instructions and the relevant contents in this manual carefully.
- Only use the hemolysis that is exclusive for GSH-60. Do NOT use expired reagents.
- Hemolysis can be used in combination with columns and elution buffers of any lots.

7.1.4 Long-term Downtime

When not in use for more than 1 week, the reagents in the tubes of the instrument should be replaced with pure water in the following steps:

(1) Remove the column from the instrument as described in Chapter 6, *6.6 Replacement of Column*, connect the tube ends with fixing tube joints and a silicon tube.
Note: after removing the column from the instrument, reattach the fixing plugs to prevent the inside of the column from drying, and store it in a dark place (2-30°C).
(2) Insert all the reagent tubes into a container with pure water. Then perform the manual tube washing for all the reagent tubes (refer to Chapter 6, *6.3 Manual Tube Washing*).
(3) From the Maintain screen, check all the reagents, and start the pump manually (refer to

Chapter 6, *6.5 Manual Starting of the Pump*). 10 minutes later, close the pump.

7.2 Failure Inspection

- No Power
  - Whether the power cord is firmly connected?
  - Whether the main power is ON?
- Unusual Chromatographic Patterns
  - Whether the sample volume is adequate? The blood collection tube requires a minimum of 1,000 µL and the sample cup requires a minimum of 500 µL for testing.
  - Whether the elution buffers can be delivered properly? Check the pump pressure on the SAMPLE screen. If the pressure is abnormal, remove air bubbles as described in Chapter 6, *6.9 Removing Air Bubbles*.
  - Whether the hemolysis is adequate?
  - Whether it is the time to replace the column and filter?
  - Whether the lot numbers of the column and the elution buffer A& B are the same?
  - Whether the reagent tubes are inserted into the correct reagent containers?
- Frequent Barcode Reading Errors
  - Whether the barcodes are printed well?
  - Whether the barcodes are printed on colored labels?
  - Whether the set barcode format is used? Are the labels dirty or wrinkled?
  - Whether the barcode labels face the side of the reader?
  - Whether the barcodes are skewed? The skew should not exceed 5 degrees.
- Sample Cup Errors
  - Whether the sample rack has been moved forcibly or the sample rack sensor becomes bent?
  - Whether the sample cups are placed in the rack with suitable holders?
- Sample Probe Bent or Broken
  - Whether the sample containers are appropriate for the rack?
  - Whether the end marker is installed correctly? When the orientation is reversed, the rack transportation will fail.
  - Whether the blood collection tubes are capped properly?
  - Whether the sample containers are placed in the rack with suitable holders?

7.3 Error Messages

Error messages are displayed when the analyzer detect problems. When consulting, it is recommended to inform the contents of the error messages and the error codes to facilitate troubleshooting. For error messages not described below, contact Goldsite Diagnostics Inc. after sales.

7.3.1 Errors that Abort Current Tests

If the analyzer detects the problems below, the test will be automatically aborted, and the instrument will enter the standby state.

- The pump pressure exceeds the set upper limit (15Mpa, the normal pressure ranges approximately from 8Mpa to 11Mpa). If this is found, try washing the reagent tubes manually (6.3), starting the pump manually (6.5), and removing the air bubbles (6.9). If no improvement is observed, replace the filter and column. Call Goldsite Diagnostics Inc. after sales as a final resolution.
- The pump pressure cannot rise due to air infiltration in the pump valve. If this is found, try removing bubbles (6.9) first. If the problem still exists, try starting the pump manually (6.3) and open and close the pump valve (6.9) two to three times during the pumping process. If the pressure rises when the valve is closed, the problem is solved. If the pressure still does not rise, start the pump again and make sure the valve is closed tightly.

7.3.2 Common Test Errors

- Unusual chromatographic patterns or large deviations in test results. These problems are generally caused by sampling and dispensing problems. Please confirm the remaining amounts of reagents and samples and the method of sample dilution, and check whether the column, filter, elution buffers, etc. have exceeded the expiration date.
- Calibration failed. Make sure the column, filter, reagents have not expired. Make sure the entered calibrator target values are those of the correct lot and are entered in the correct unit.
- Barcode reading failed. Make sure the barcodes are placed in proper positions. If this error occurs frequently, contact Goldsite Diagnostics Inc. after sales.

7.3.3 Errors that Abort the Following Tests

- Improper rack transportation. Make sure the sample rack is placed properly and reperform the test. Do NOT move the racks, add or remove samples during testing.
- Abnormal sample probe movement. Make sure the correct sample container type is selected. The error may also occur when the sample sensor is bent, or the sample container type cannot be recognized.

7.3.4 Other Errors and Messages

Errors:

- Cover not closed. Close the emergency sample chamber cover.

- Use of the filter has exceeded the usage limit. Replace the filter.
- Use of the column has exceeded the usage limit. Replace the column.
- Inadequate elution buffer. Replace the elution buffer.

Messages:

- Test is stopped. After STOP has been clicked once.
- Emergency stop. After STOP has been clicked twice and the instrument enters the standby state.
- Messages indicating the operation cannot be performed during testing.
- Out of paper. Replace the printer paper.
- No USB flash drive detected. Remove the USB flash drive and insert again.
- Disk is full. Export or delete data to free up the space.

7.4 Unusual Chromatogram

Although there may be slight differences in the proportion of each hemoglobin between patients, most blood samples contain six components: A1A, A1B, F, LA1C+, SA1C, and A0.

Be cautious to interpret the results when unusual chromatographic patterns appear, since the unusual patterns can be caused by either the hemoglobin variants or technical problems (e.g. unstable column or reagents, air bubbles, etc.). Refer to Chapter 5, *5.10 Result Report* for more information.

Chapter 8 Appendix

8.1 LIS Communication

GSH-60 transmits the test results to the LIS server via the RS-232C protocol. Results are transmitted in real-time after each measurement (one minute per sample),

- Communication Specifications

Type	RS-232C, Start-stop Synchronization, Half Duplex
Speed	1200, 2400, 4800, 9600bps
Character Encoding	ASCII
Data Length	7bit、8bit
Parity Check	Even, Odd, None
Stop Bit	1bit、2bit

If you select the serial port to send data, 9600bps should be selected because of the large amount of data.

8.2 Instrument Specifications

- Technical Specifications

Analytes	HbA1c (SA1c)
Test Principle	Ion exchange high performance liquid chromatography, two wavelength absorption (415 nm and 500 nm)
Throughput	1 minute per sample
Sample Material	Whole blood or diluted blood
Sample Volume	3 μL for whole blood, 80 μL for diluted blood
Sample Holding	10 samples/rack
Sample Containers	Φ12~Φ15 × 75~100 mm blood collection tube and sample cup
Barcode	Up to 20 digits

- Common Specifications

Display	8-inch LCD touch screen with 800×600 pixels
Input	Resistive touch panel
Output	Thermal printer
Storage	32GB SD memory card
Delivery Unit	Single-piston pump with a maximum delivery pressure of 15Mpa

Column Temperature Control	Electronic cooling (temperature: 25° C)
Communication	RS-232C serial communication, bi-directional (half duplex)
Calibration	Two-point calibration
Power Requirement	100-240V, 50/60 Hz
Operating Temperature	10 – 30℃
Operating Humidity	30 – 70% (RH, without condensation)
Operating Altitude	Up to 2,000 m elevation
Environment	Indoor only
Overvoltage Category	II
Pollution Degree	2
Transportation Temperature	-20 – 55℃
Transportation Humidity	10 – 90% (RH, without condensation)
Dimensions	564 mm × 560 mm × 458 mm (Length × Depth × Height)
Weight	52 kg

Goldsite Diagnostics Inc.

Address of Manufacturer
Address of Manufacturer: No. 1001, Building No.1, GOLDSITE Mansion,
No. 9 Rongtian Road, Kengzi, Pingshan District, Shenzhen, 518122 China

Email: export@goldsite.com.cn

Tel: 0086 755 2689 0807 **Fax**: 0086 755 2689 0799

Website: en.goldsite.com.cn

Copyright © 2024 Goldsite Diagnostics Inc.
All rights reserved