DYNEX

MAGELLAN BIOSCIENCES

Revelation™ DSX™

LIS-Link Programmer's Guide

Revision History

Revision Date:
October 1 2002 12/9/2002 10/15/04 04/20/05

Part No. 91001020

This manual is published by DYNEX Technologies, Inc.

Questions or comments regarding the content of this manual can be directed to the address below or to your supplier.

DYNEX Technologies, Inc.

14340 Sullyfield Circle

Chantilly, VA 20151-1621 USA

© 2002 This document is the copyright of DYNEX Technologies and must not be copied or reproduced in any form without prior consent.

DYNEX Technologies reserves the right to make technical improvements to this equipment and documentation without prior notice as part of a continuous program of product development. This manual supersedes all previous editions.

Microsoft and Microsoft Windows are registered trademarks of Microsoft Corporation.

Pentium is a registered trademark of Intel Corporation.

Table of Contents

About this Manual ii

Chapter 1 Overview 1

- Introduction 1
  - Connection Options 1
  - Communication Protocol 1
  - System Requirements 2

Chapter 2 Low Level Interface 3

- ASTM E 1381 RS-232 Serial Interface 3
- TCP/IP Network Interface 5
  - Overview 5
  - Detailed Description 5
  - Packets Types 7
  - Packet Structure 7

Chapter 3 High Level Protocol 13

- ASTM E 1394 13
  - Structure of Messages and Required Fields 17

Chapter 4 Installation 23

- Installing the LIS-Link Software 23
- Starting the LIS-Link Software 25

Chapter 5 Configuring the Interface 27

- Selecting System Parameters 27
  - System Configuration 28
- Downloading Test Orders 29

Chapter 6 Transmitting Results to the LIS 31

- Updating Result Status Settings 31
- Sending Results to the LIS 32

Chapter 7 Deleting and Exporting Data 33

- Deleting Pending Test Runs 33
- Deleting Transmitted Results 35
- Deleting Results Without Transmitting Them 36
- Exporting Results 36

Chapter 8 Step By Step Procedures 37

- Installation and Configuration 37
- Running a Test Batch 38

Index 39

About this Manual

This manual has been written for software developers and contains detailed instructions for programming the DSX LIS interface.

This manual gives you the information needed to:

- Connect the DSX PC and laboratory host computer
- Install the DSX LIS-Link application software
- Program the LIS interface
- Select the LIS-Link communication parameters
- Request test orders from the host computer
- Upload assay results to the host computer

Chapter 1 Overview

Introduction

The LIS-Link application is an optional software package that can be installed on the DSX PC. The LIS-Link application allows the DSX to communicate with the laboratory host computer to download pending test orders and to upload completed assay results.

Connection Options

The LIS-Link application supports two physical connection options:

- RS-232 Serial Connection
- TCP/IP Network Connection

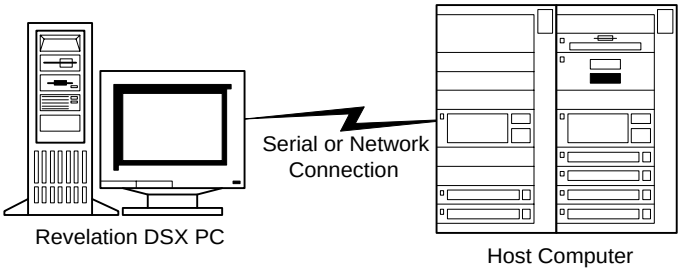

Figure 1 Host Connection

Communication Protocol

The physical connection option determines which low-level protocol the LIS-Link application uses.

The high-level, application layer, protocol is the same regardless of the connection method. This protocol is defined in ASTM document E 1394-97, *Standard Specification for Transferring Information Between Clinical Instruments and Computer Systems*.

☞ ***Note**: Obtain this standard document through the ASTM Web site: www.astm.org.*

System Requirements

To run the LIS-Link software you need a personal computer with the Microsoft Windows NT (Service Pack 6a) or Windows 2000 operating system and the following hardware options:

- 500 MHz processor (800 MHz Pentium class or higher recommended)
- 64 MB of memory (192 MB recommended)
- 100 MB of available hard disk space (200 MB recommended)
- 256-color video card (24-bit recommended)
- CD-ROM for the software installation
- Serial port for the DSX connection

To link the personal computer to the LIS you also need:

- Serial port for an RS-232 connection

  – or –

- 10 Mbps Ethernet port for a TCP/IP connection (10/100-Mbps recommended)

Chapter 2 Low Level Interface

ASTM E 1381 RS-232 Serial Interface

If the host computer is directly connected to a DSX PC serial port then the protocol used to establish a session between the host and DSX is ASTM E 1381.

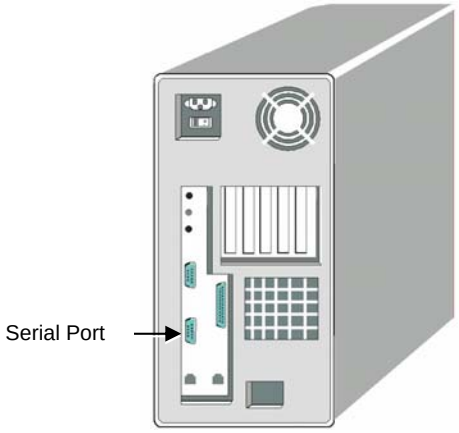

Figure 2 Serial Connection

Cabling requirements for the RS-232 interface are listed in the table below.

9-pin DSX PC	DSX PC Signal Name	Signal Description	Host Computer
3	Transmit Data (TD)	DSX-PC Sends data to another device	RD
2	Receive Data (RD)	DSX-PC Receives data from another device	TD
7	Request To Send (RTS)	Indicates the DSX-PC is ready to send data	CTS
8	Clear To Send (CTS)	Indicates the host is ready to send data	RTS
6	Not Used		
5	Ground (GND)	Signal ground	GND
4	Not Used		

The ASTM E 1381 protocol is described in standard ASTM document E 1381-95, *Standard Specification for Low-Level Protocol to Transfer Messages Between Clinical Laboratory Instruments and Computer Systems*.

☞ ***Note**: Obtain this standard document through the ASTM Web site: www.astm.org.*

If a serial connection is used the low-level protocol is ASTM E 1381 and the high-level protocol is ASTM E 1394.

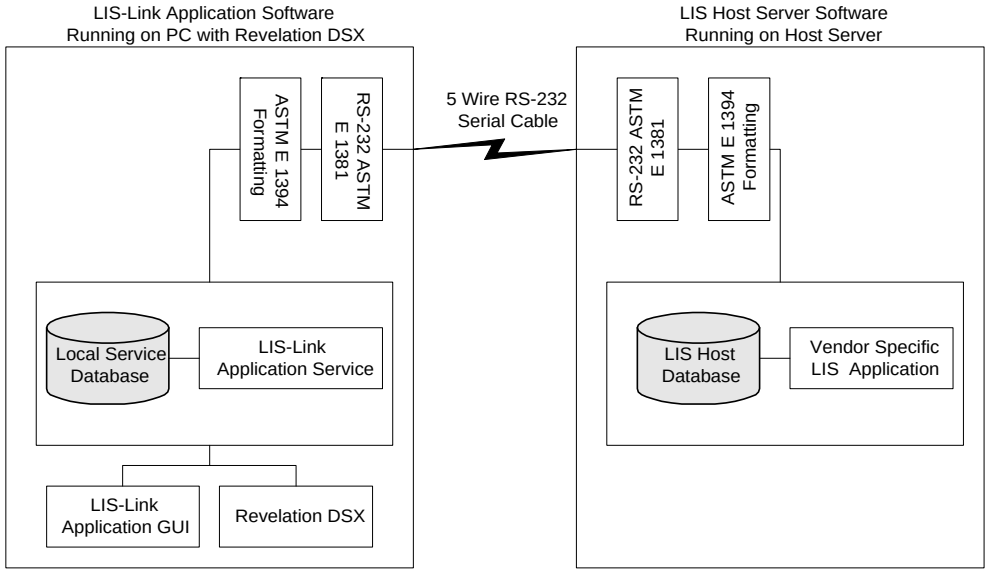

Figure 3 Serial Communication

TCP/IP Network Interface

If the host computer communicates with the DSX PC over the laboratory intranet then the low-level protocol is a TCP/IP based protocol specifically written for the DSX LIS-Link application.

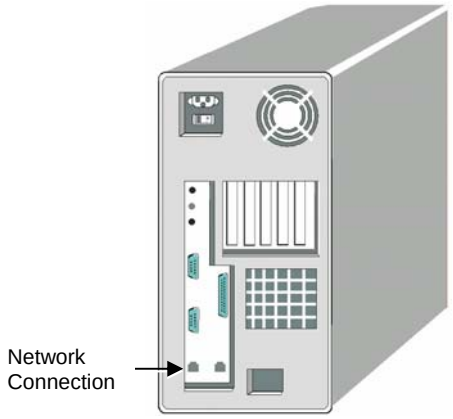

Figure 4 Network Connection

Overview

This custom protocol transmits binary data in a fast, yet reliable method by using an ACK-less transmission method that cuts down on “talk-back” between client and server.

All data packets are CRCed to ensure their integrity, and to maintain the reliability of the interface. If frames are lost during transmission the receiver may request all the missed frames at once.

Detailed Description

First the transmitting computer sends a “start of message” packet to the receiving computer. The start of message packet contains message size information. If the receiving computer is ready to accept the message it responds with an ACK. If the receiving computer is busy it NAKs the request.

When the sender gets the acknowledgement it formats the data message into frames and then transmits the frames sequentially without waiting for a frame by frame acknowledgment from the receiver. After the sender is done transmitting all the frames it sends a “done transmitting” packet.

When the receiver gets the “done transmitting” packet it checks to make sure the total frame count and total byte length match the information contained in the start of message packet. If the receiver is missing any frames it sends a “request frame(s)” packet to the sender. If the sender still has the message in memory it ACKs the request and sends the missing frames. If the sender no longer has the message it responds with a NAK.

Once the receiver has the complete message it responds with a “done receiving” packet. The sender can then delete the transmission from memory.

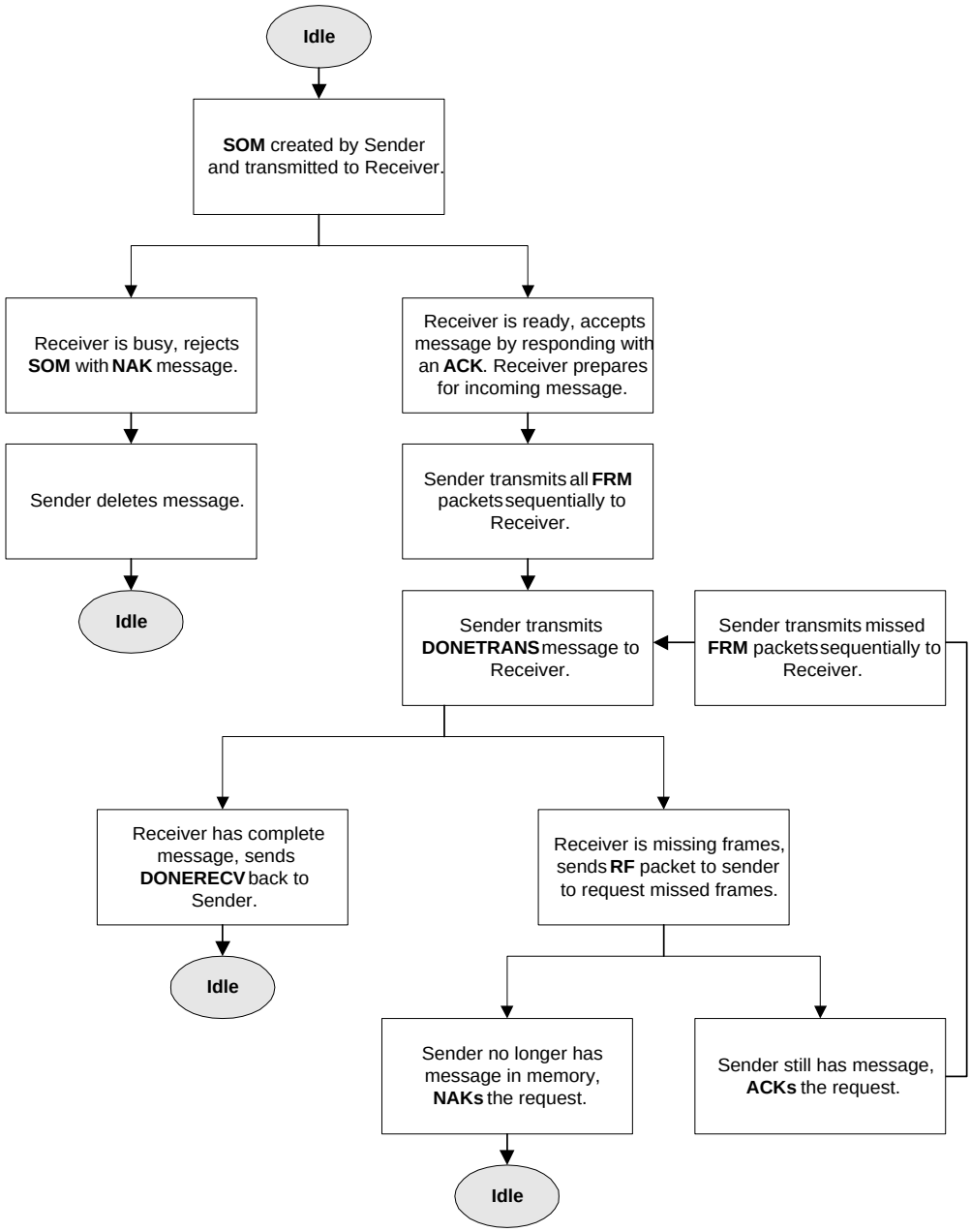

Figure 5 Custom TCP/IP Protocol Process Diagram

Packets Types

Each packet has an assigned code to indicate its type. These codes are listed below.

Code	Value (Base 16)	Value (Base 10)	Description
ACK	0x06	6	Positive Acknowledge
NAK	0x15	21	Negative Acknowledge
FRM	0x10	16	Frame (contains ASTM E 1394 message data)
RF	0x11	17	Request Missing Frame(s)
DONERECV	0x12	18	Done Receiving
DONETRANS	0x13	19	Done Transmitting
SOM	0x14	20	Start of Message

☞ ***Note**: The ACK, NAK, DONETRANS and DONERECV packets do NOT contain CRCs.*

Packet Structure

Start of Message

The Start of Message (SOM) packet is 21 bytes long. It contains the SOM code, 0x14, a CRC, a message ID, total number of frames and total byte length of the message that follows and a character that represents whether this is an initial message or a response to previously transmitted message.

Byte Layout

1 – 4	Code = (0x14)
5 – 8	32-Bit CRC
9 - 12	Message ID
13 - 16	Total number of frames
17 - 20	Total byte length of the message to be sent. This number represents only the message data. This does not include framing numbers, codes, message ids, etc…
21	‘C’ for initial transmission or ‘R’ for response to previous transmission

☞ ***Note**: The CRC is calculated for bytes 9 – 21.*

ACK and NAK

An ACK/NAK packet contains the code, ACK (0x06) or NAK (0x015), the message ID it is acknowledging or rejecting and the response reason.

For example, if a receiver sends a “request frames” message to the sender and the sender does not have the requested frames in memory then the sender responds with a NAK message and the reason code is RF (0x11). If the receiver wants to accept an SOM it would send an ACK message with the reason set to SOM (0x14).

Byte Layout

1 – 4	Code = ACK (0x06) or NAK (0x15)
5 – 8	Message ID
9 – 12	Reason. Valid values are RF (0x11) or SOM (0x14)

☞ ***Note****: No CRC is included in this message.*

Done Transmitting and Done Receiving

The purpose of these two packets is state control. They allow one side to signal the other of its state in the transmission/reception process.

The sender transmits a DONETRANS packet when it has sent all frames in the initial transmission and again after it sends all missing frames if a retransmission is requested.

The receiver sends a DONERECV message after it has collected all expected frames.

The message contains the code, DONETRANS (0x13) or DONERECV (0x12), and a message ID.

Byte Layout

1 – 4	Code = DONETRANS (0x13) or DONERECV (0x12)
5 – 8	Message ID

☞ ***Note****: No CRC is included in this message.*

Frame Message

The Frame Message (FRM) contains the message data. It consists of the frame code, 0x10, a CRC, the message ID, the frame number, the byte length of the data in this frame and a block of bytes equal in size to what was specified by frame length.

☞ ***Note**: Maximum frame size is specified in ASTM E 1381.*

Byte Layout

1 - 4	Code = FRM (0x10)
5 – 8	32-Bit CRC
9 – 12	Message ID
13 – 16	Frame Number
17 – 20	Frame Length
21 - (20 + frame length)	Block of Bytes (message data)

☞ ***Note**: The CRC is calculated for bytes 9 –end of the message.*

Request Frame Message

The Request Frame (RF) mechanism allows for the retransmission of frames lost or corrupted during the initial transmission. This process is optimized by "batching" the frame request. Instead of requesting each frame one by one the entire list of missing frames can be requested at once. The RF message consists of the code, (0x11), a CRC, the message ID and a variable length block of 4-byte segments each containing a missing frame number.

The missing frame numbers can be determined by taking the total received packet length and subtracting the byte count for the CRC, message ID, and code and then dividing by 4. This process will yield an array of unsigned longs that represent missed frames.

Byte Layout

1 – 4	Code = RF (0x11)
5 – 8	32-Bit CRC
9 – 12	Message ID
13 - ??	Variable length array unsigned longs representing missing frame numbers.

☞ ***Note**: The CRC is calculated for bytes 9 –end of the message.*

If a network connection is used the low-level protocol is a custom TCP/IP protocol and the high-level protocol is ASTM E 1394.

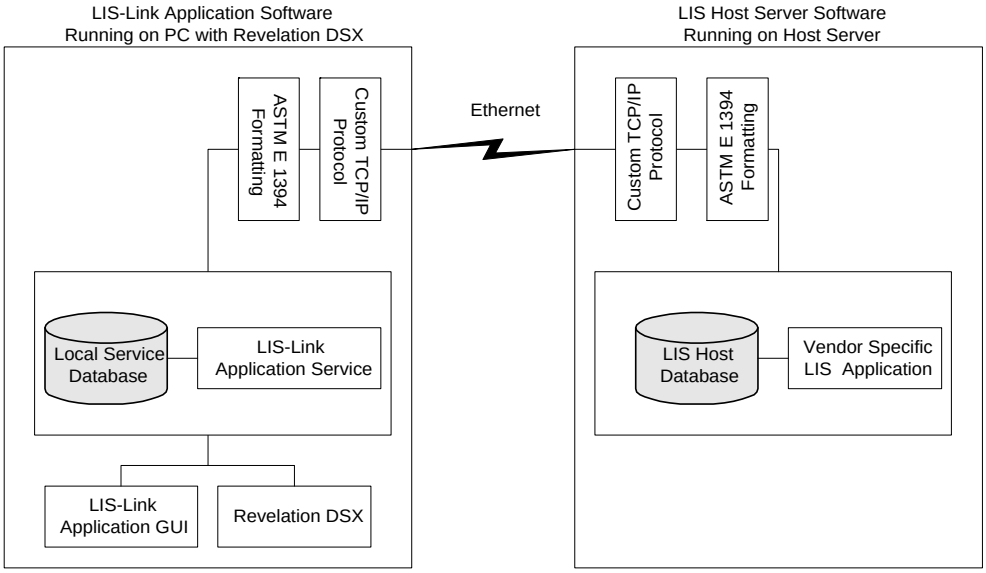

Figure 6 Network Communication

This page is intentionally left blank

Chapter 3 High Level Protocol

ASTM E 1394

The LIS-Link application is compliant with the ASTM standard described in ASTM document E 1394-97, *Standard Specification for Transferring Information Between Clinical Instruments and Computer Systems*.

Test Orders Requested by the DSX

A request for test orders is transmitted from the DSX to the host computer when a sample barcode is read (see *Query Style* on page 28).

The request for test orders message consists of a standard Message Header Record, Request Information Record, and a Message Terminator Record.

Structure defined by ASTM E 1394 **(multiple records comprise a single message)**		**Structure defined by ASTM E 1381 or Custom TCP/IP protocol**
Message Header Record Request Information Record Message Terminator Record	→	Frame 1

Figure 7 Request for Test Orders from Host

Test Order (s) Sent from the Host

If the host has the requested test order(s) it responds with a Message Header Record, Patient Information Record, Test Order Record(s) and Message Terminator Record. The message structure follows the hierarchy defined by ASTM E 1394.

Structure defined by ASTM E 1394 **(multiple records comprise a single message)**		**Structure defined by ASTM E 1381 or Custom TCP/IP Protocol** **(a single message is sent as one or more frames)**
Message Header Record Patient Information Record 1 Test Order Record 1 : Test Order Record n : Patient Information Record n Test Order Record 1 : Test Order Record n Message Terminator Record	→	Frame 1 : Frame n

Figure 8 Response from Host

☞ ***Note**: Each Test Order Record should contain information about a single test.*

Rejected Test Orders

The DSX stores valid test orders in the system database. A Manufacturer message is used to notify the host of an invalid or rejected test order.

The message may require vendor customization. Customizations are described in the document for that particular vendor DLL.

Structure defined by ASTM E 1394 **(multiple records comprise a single message)**		**Structure defined by ASTM E 1381** **(multiple records comprise a single message)**
Message Header Record Manufacturer Record 1 .. .. Manufacturer Record n Message Terminator Record	→ 	 Frame 1 : Frame n

Figure 9 Manufacturer Message

Test Results from the DSX

Once assay results are complete, the DSX operator initiates result transmission to the host computer using the LIS-Link application GUI (see page 31).

The result message consists of a standard Message Header Record, Patient Information Record, Test Order Record(s), Result Record(s) and a Message Terminator Record.

Structure defined by ASTM E 1394 **(multiple records comprise a single message)**		**Structure defined by ASTM E 1381 and custom TCP/IP protocol** **(a single message is sent as one or more frames)**
Message Header Record	→	
Patient Information Record 1		Frame 1
Test Order Record 1		:
Result Record 1		Frame n
:		
Result Record n		
Test Order Record n		
Result Record 1		
:		
Result Record n		
Patient Information Record n		
Test Order Record 1		
Result Record 1		
:		
Result Record n		
Test Order Record n		
Result Record 1		
:		
Result Record n		
Message Terminator Record		

Figure 10 Result Message

Structure of Messages and Required Fields

ASTM E 1394 has numerous optional parameters not used by this interface. If the host computer transmits a field that is not used by the DSX the field is ignored.

The protocol follows the ASTM recommendation to transmit only that portion of each record up to and including the last required field.

Message Header Record

The Message Header record identifies the sender and the receiver. It is at the top level of the message hierarchy and must be followed at some point by a Message Terminator record.

Field No.	ASTM Field	Description	Valid Contents	Required	Sent
1	Record Type ID	Identifies the record as a message header	'H'	Y	Y
2	Delimiter Definition	Field, repeat, and component delimiters and escape characters	Any received set is accepted	Y	Y
3	Message Control ID	Unique ID for acknowledgement protocols		N	N
4	Access Password	Mutually agreed on password		N	N
5	Sender Name / ID	Identifies message sender or receiver	See *System Options* on page 28	Y	Y
6	Sender Street Address	Location		N	N
7	Reserved Field	Unused		N	N
8	Sender Telephone No.	Phone number		N	N
9	Characteristics of Sender	Special communication link settings		N	N
10	Receiver ID	For verification		N	N
11	Comment	Special processing instructions		N	N
12	Processing ID	How the message is to be processed		N	N
13	Version No.	E 1394-97		N	N
14	Date and Time of Message	Date and time the message was generated	YYYYMM DD HHMMSS	N	Y

Patient Information Record

The Patient Information record contains patient demographic data for a single patient. It is at Level 1 in the message hierarchy.

Field No.	ASTM Field	Description	Valid Contents	Required	Sent
1	Record Type ID	Identifies the record as a patient information record	'P'	Y	Y
2	Sequence Number	Starts at 1, identifies the *i*'th occurrence of a Patient Information record in a single message	1..65535	Y	Y
3	Practice Assigned Patient ID	Medical ID	text string	Opt	Opt
4	Laboratory Assigned Patient ID	Patient ID	text string	Y	Y
5	Patient ID No. 3	Additional identification e.g. SSN		N	N
6	Patient Name	Stored in the database and displayed in the LIS-Link GUI assay list	text string	Opt	Opt

Test Order Record

The Test Order record identifies the sample and a test to be performed on the sample. One Test Order record should be provided for each requested test. The Test Order record is at Level 2 in the message hierarchy.

Field No.	ASTM Field	Description	Valid Contents	Required	Sent
1	Record Type ID	Identifies the record as a test order record	'O'	Y	Y
2	Sequence Number	Starts at 1, identifies the *i*'th occurrence of a Test Order record for a specific Patient	1..65535	Y	Y
3	Specimen ID	Sample ID, stored in the database and displayed in the LIS-Link GUI assay list	text string	Y	Y
4	Instrument Specimen ID	Assigned by the instrument		N	N
5^4	Universal Test ID	Assay name	See *Name Mappings* on page 28	Y	Y

Result Record

The Result record contains the result value for a single test. It is at Level 3 in the message hierarchy.

Field No.	ASTM Field	Description	Valid Contents	Required	Sent
1	Record Type ID	Character identifying the record as a result record	'R'	Y	Y
2	Sequence Number	Starts at 1, identifies the *i*'th occurrence of a Result record for a specific Order	1..65535	Y	Y
3^4	Universal Test ID	Assay name	See *Name Mappings* on page 28	Y	Y
4	Data or Measurement Value	Results	Calculated result value	N	Y
5	Units	For numeric data		N	Y
6	Reference Ranges	Lower to upper limits		N	N
7	Result Abnormal Flags	**	RW, DF, RA, CF, TH, FR	N	Y
8	Nature of Abnormality Testing	For example population by age, sex or race		N	N
9	Result Status	Final or Unable to run test	'F' or 'X'	N	N
10	Date of Change In Instrument Values	Normative values or units		N	N
11	Operator ID	Operator who performed and verified the test		N	N
12	Date/Time Test Started	Start date/time		N	N
13	Date/Time Test Completed	Completion date/time	YYYYMM DD HHMMSS	N	Y
14	Instrument ID	Instrument that performed the test.	Machine name defined in System Options	N	Y

** RW: Raw Result CF: Curve Fit
DF: Difference TH: Threshold
RA: Ratio Result FR: Final Result

Request Information Record

The Request Information record is used to request pending test orders from the host. Only one request may be outstanding. The Request Information record is at Level 1 in the message hierarchy.

Field No.	ASTM Field	Description	Valid Contents	Required	Sent
1	Record Type ID	Character identifying the record as a request information record	'Q'	Y	Y
2	Sequence Number	Starts at 1, identifies the *i*'th occurrence of a Request Information record in a single message	1..65535	Y	Y
3	Starting Range ID	Sample ID See *Downloading Test Orders* on page 29	ID or 'ALL'	N	Y

When the Starting Range ID is the phrase 'ALL' the host should respond with all sample-IDs that have not been previously transmitted to the DSX.

Manufacturer Record

The Manufacturer record is used to report errors to the host. The Manufacturer Information record is at Level 1 in the message hierarchy.

Field No.	ASTM Field	Description	Valid Contents	Required	Sent
1	Record Type ID	Character identifying the record as the last record in the message	'M'	Y	Y
2	Sequence Number	Starts at 1, identifies the *i*'th occurrence of a Manufacturer record in a single message	1..65535	Y	Y
3	Error Code	**	10, 12, 14	Y	Y
4	Sample ID	Specimen ID	ID from the host	Y	Y
5	Assay Name	Name of assay in error	Name from the host	N	Y
6	Error Message	Description of the error	text string	N	Y

** 10: Duplicate Assay For A Given Sample ID
12: No Orders For Patient
14: Invalid Assay Name

Message Terminator Record

The Message Terminator record provides the session termination code. It is at the top level of the message hierarchy and is always the last record in the message.

Field No.	ASTM Field	Description	Valid Contents	Required	Sent
1	Record Type ID	Character identifying the record as the last record in the message	'L'	Y	Y
2	Sequence Number	Identifies the *i*'th occurrence of a Message Terminator record in a single message	Always 1	Y	Y
3	Termination Code	Explanation of end of session	per ASTM E 1394	Y	Y

This page is intentionally left blank

Chapter 4 Installation

Installing the LIS-Link Software

The LIS-Link application software is provided on a CD-ROM.

To install the LIS-Link Software

1. Start Microsoft Windows.
2. Insert the installation CD-ROM. The installation program will start automatically and the Installation window will be displayed.

   ☞ ***Note**: If the installation program does not start automatically, select **Start** and then **Run** from the Windows task bar. In the Run text box, browse to **setup.exe** on the CD ROM drive, click **Open**, and then click **OK**.*

3. Select the desired installation options and click **Next** to continue.

   ☞ ***Note**: To stop the installation, click **Exit**.*

4. The prompt **Setup is complete** is displayed when the installation is complete. Click **OK** and remove the installation CD-ROM.

   The LIS-Link program group is added to the Start menu:
   Start > Programs > DYNEX Technologies > LIS Link

   ☞ ***Note**: A shortcut icon can also be placed on your computer desktop for convenient access.*

To create a shortcut icon

1. Open Microsoft Windows Explorer.

2. Locate the LIS-Link installation directory **c:\Programs Files\DYNEX Technologies\LIS Link**.

3. Click **LIS-Link.exe** then select **Create Shortcut** from the File menu.

   Alternately, right-click **LIS-Link.exe** and select **Create Shortcut** from the popup menu.

4. Drag the shortcut icon onto the desktop.

5. Close Microsoft Windows Explorer.

Starting the LIS-Link Software

The LIS-Link application automatically starts when the DSX PC is started. No user interaction is required to establish the host connection or request test orders from the host. These activities are handled automatically by the LIS-Link application based on user defined configuration settings.

The LIS-Link application includes a graphical user interface for entering the configuration settings and initiating the upload of assay results.

The LIS-Link GUI is started from the Windows Start menu or desktop icon.

To start the GUI

1. Double-click the **LIS-Link** shortcut icon. Or, select **LIS-Link** from the **DYNEX Technologies** group in the Windows Program menu.
2. Type **dynex** as the default system password (this can be changed by selecting **Password** from the **Systems** menu).
3. Click **OK**.

   The main window is displayed.

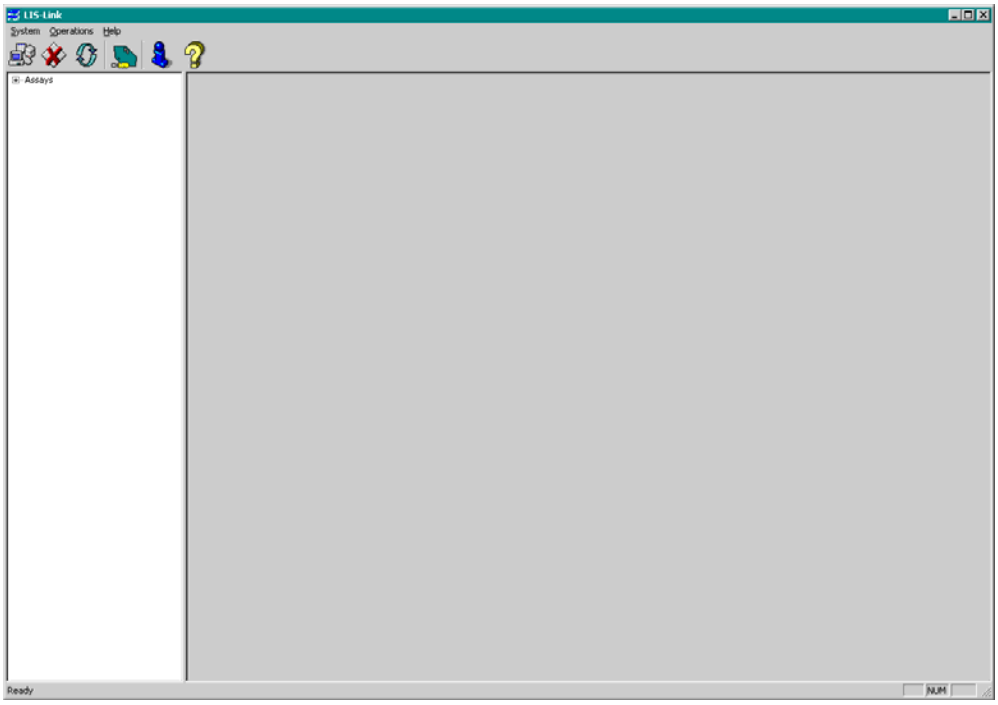

Figure 11 Main Window

This page is intentionally left blank

Chapter 5 Configuring the Interface

Selecting System Parameters

The interface protocol and other laboratory preferences are selected using the System Configuration dialog.

To display the System Configuration dialog

1. Select **Configuration** from the **Systems** menu. The System Configuration dialog box is displayed (Figure 12).

   Alternatively, click the Configuration tool .

2. Specify the settings for each of the configuration options.

   ***Note**: Settings are summarized in the next section. Detailed instructions are contained in the* LIS-Link *Online Operator's Manual, accessed by selecting the **Help** from the menu bar.*

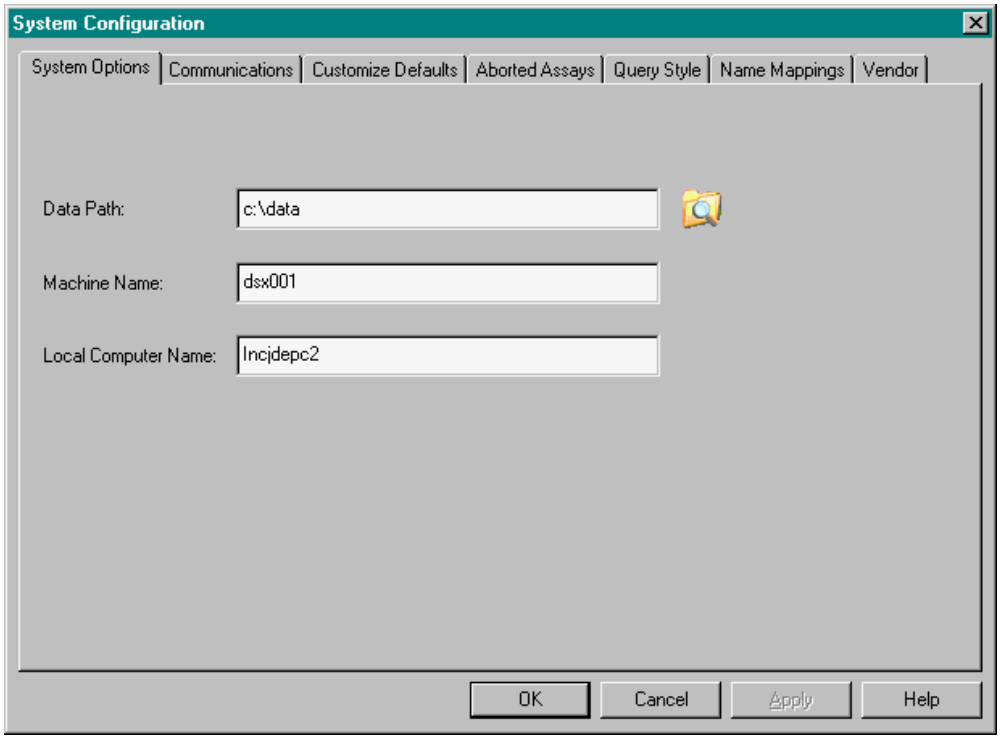

Figure 12 System Configuration Dialog Box

System Configuration

The configuration options are summarized below:

Option	Description
System Options	Select the directory where Revelation DSX will place result data for the LIS-Link application.
	Enter the DSX identifier (Machine Name) included in the ASTM Header record.
	Enter the host name (Local Computer Name) included in the ASTM Header record.
Communications	Select the connection method and communication parameters. Two options are available:
	Serial - The host computer is directly connected to the Revelation DSX through a serial port at the back of the DSX computer.
	TCP/IP - The host computer and DSX communicate using the laboratory intranet.
Customize Defaults	Determine whether results are automatically tagged for transmission to the LIS.
Aborted Assays	Indicate how aborted test runs are handled: deleted, re-run, or left for user confirmation.
Query Style	Set the query mode: Request all pending test orders, or only orders for scanned barcode samples.
Name Mappings	Associate the LIS test name with a Revelation DSX assay file name.
	Choose the type of result data that is transmitted to the host computer.
Vendor	Select a vendor customization to the LIS interface.

Downloading Test Orders

The *Query Style* selection in the System Configuration dialog (see page 28) determines how the LIS-Link application requests test orders. Two options are available.

1. After the user begins the scanning setup process an ASTM Request Information Record is sent to the host. Field 3, Starting Range ID, is set to 'ALL'.

   ☞ ***Note**: Requests all outstanding work orders. This is query style: Query for all available Sample IDs at one time.*

2. After all scanning is completed an ASTM Request Information Record is sent to the host. Field 3, Starting Range ID, is set to the scanned barcode.

   ☞ ***Note**: Requests only the work order for the scanned sample. This is query style: Only query for sample IDs scanned.*

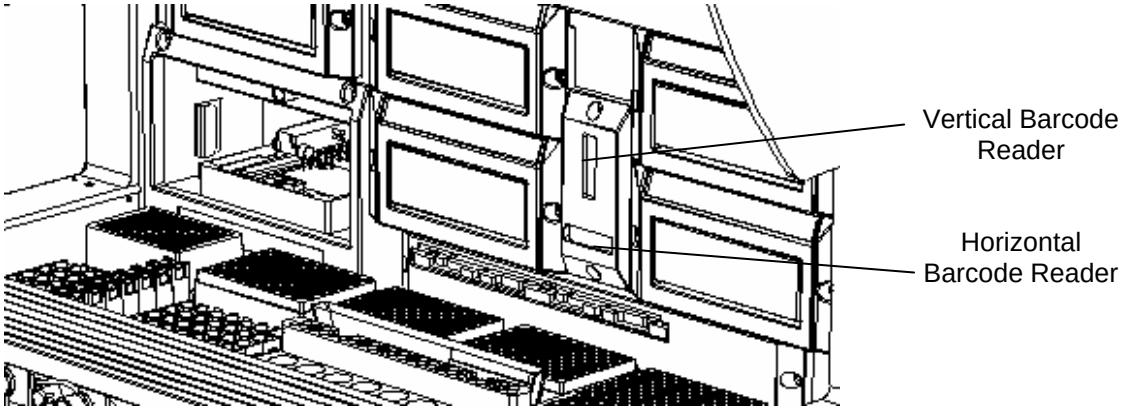

Figure 13 Barcode Readers

This page is intentionally left blank

Chapter 6 Transmitting Results to the LIS

A configuration option allows the operator to determine whether completed results are marked **Send** or **Leave** (see *Customize Defaults* on page 28). Prior to transmitting the data, result status settings can be reviewed and modified.

Updating Result Status Settings

1. Click on the plus sign ⊞ Assays in the main window to display the assay list.

   The list opens and displays all assay names. Assays containing results that are ready for disposition (aborted or completed) appear in bold. The number of results pending disposition is shown in parentheses after the assay name.

   ☞ ***Note**: Select **Refresh Data** from the Operations menu or toolbar to update the LIS-Link GUI with the latest DSX result data. This includes assay results generated after the GUI was launched.*

2. Click on an assay to display the results records (Figure 14).

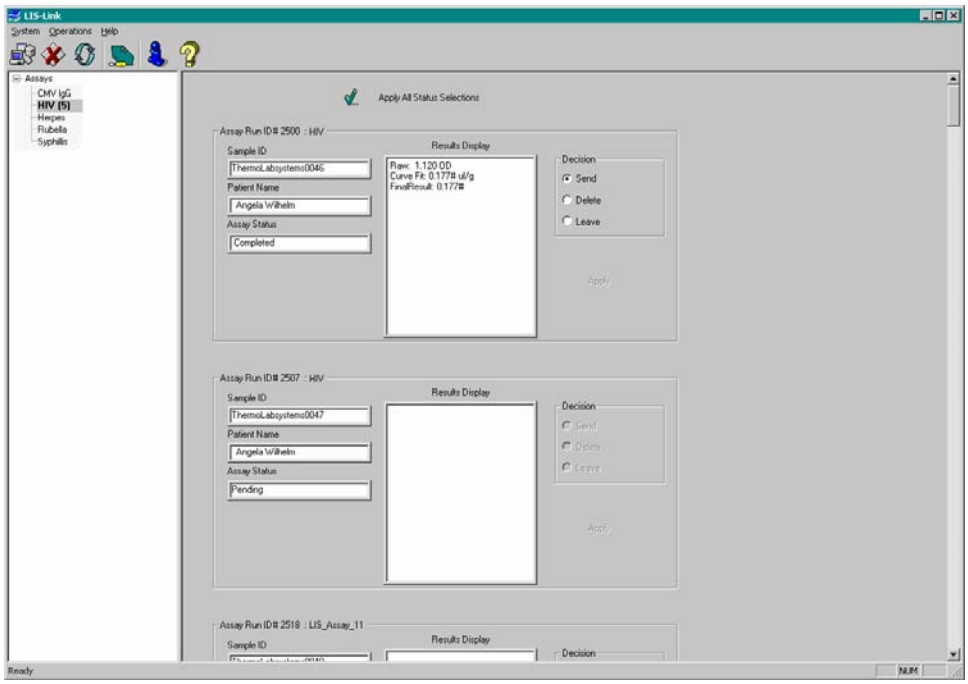

Figure 14 Results Records

Result records display the following information.

Option	Description
Sample ID	Transmitted by the host in the Test Order record (see page 18).
Patient Name	Transmitted by the host in the Patient Information record (see page 18).
Assay Status	Erred: The test run was aborted or stopped prematurely in Revelation DSX.
	Completed: The test was successfully completed.
	Queued: The test run has started in Revelation DSX but has not yet been completed.
	Pending: The test run is scheduled to be run but has not yet started (see page 33).
Result Display	Result values selected for transmission (see Name Mappings on page 28).
Decision	Send: The result will be sent to the host computer when the operator chooses to send all results.
	Delete: The result will be deleted from the database without being transmitted to the host computer when the operator chooses to delete results marked for deletion.
	Leave: The result will be left in the database and not sent to the host computer.

☞ ***Note**: Only Decision can be modified.*

3. If desired, modify a result decision.
4. Click **Apply** to update the decision for an individual record. Alternately, you can wait until all changes have been made then click **Apply All**.

☞ ***Note**: Changes will not be preserved if the GUI application is terminated before results are transmitted to the LIS. Select **Save All Status Selections** under Commit Operations in the Operations menu.*

Sending Results to the LIS

Select **Send Data to LIS Host** from the Operations menu or toolbar  to transmit results marked **Send** to the LIS.

Chapter 7 Deleting and Exporting Data

The LIS-Link application also provides options to delete pending test runs and to delete and export result data.

Deleting Pending Test Runs

Test orders received from the host that have not yet been processed can be deleted.

1. Click on the plus sign ⊞ Assays in the main window to display the assay list.

   The list opens and displays all assay names.

2. Click on an assay to display pending test orders (Figure 15).

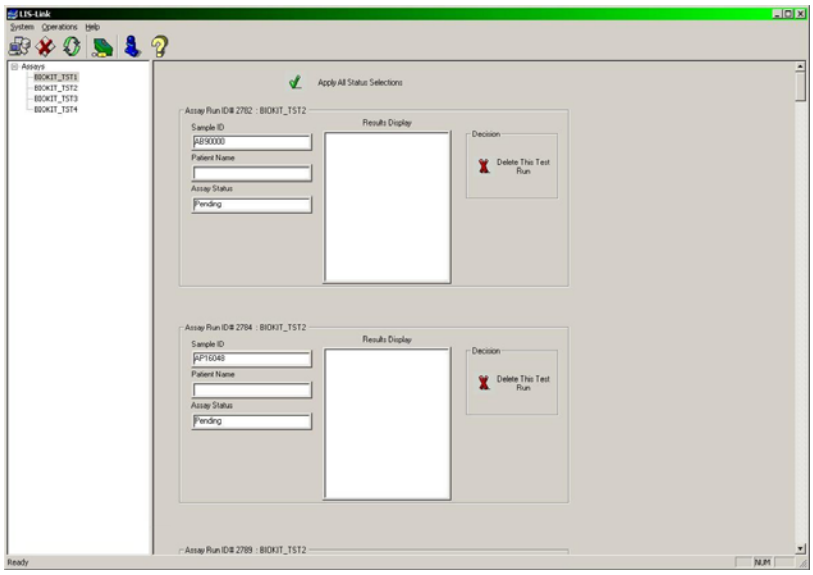

Figure 15 Pending Assays

3. Use the scrollbar to display the pending order to be deleted.

   ☞ ***Note**: Orders that have not yet been processed have an assay status of **Pending**.*

4. Click **Delete This Test Run** to mark the order for deletion.

   Assay status displays **Scheduled for Deletion** and the decision button now reads **Reset to Pending** (Figure 16).

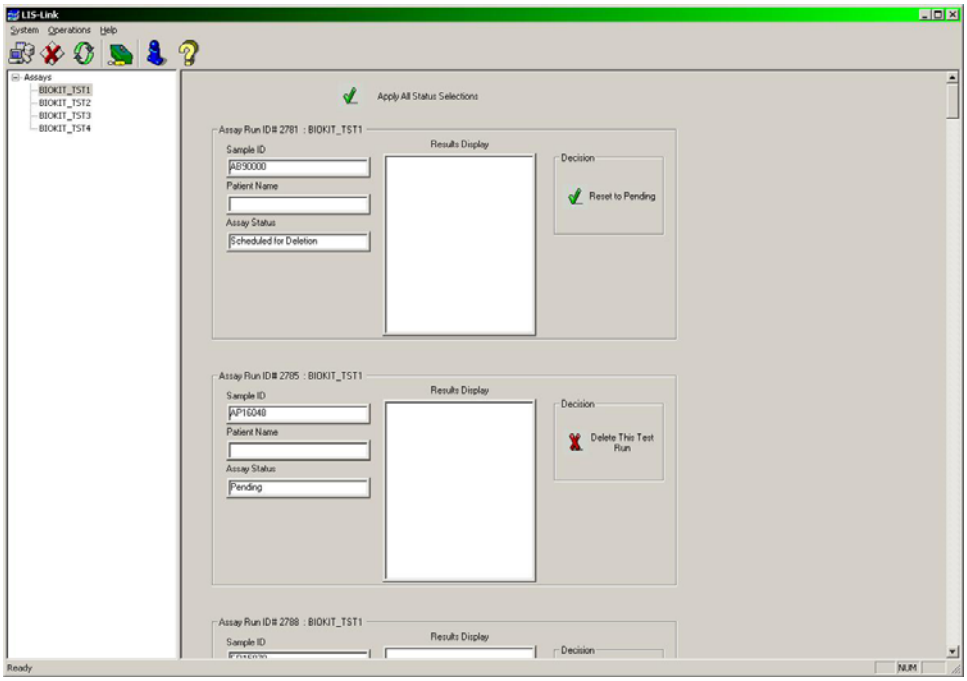

Figure 16 Orders Scheduled for Deletion

5. Mark additional orders for deletion if desired.
6. Click **Apply All Status Selections** to delete the selected orders.

> ***Note**: To reverse a selection and leave a test scheduled for execution click **Reset to Pending** before choosing **Apply All Status Selections**.*

Deleting Transmitted Results

The Delete Assays From Plate(s) command allows reported assay results to be removed from the system.

1. Select **Delete Assays From Plate(s)** on the Operations menu.

   The Cancel Assay on Plate dialog is displayed (Figure 17).

2. Click the + next to Available Plate to display the list of plates with stored result data.
3. Click the + next to a plate to view assays on that plate.
4. Click to select an assay.

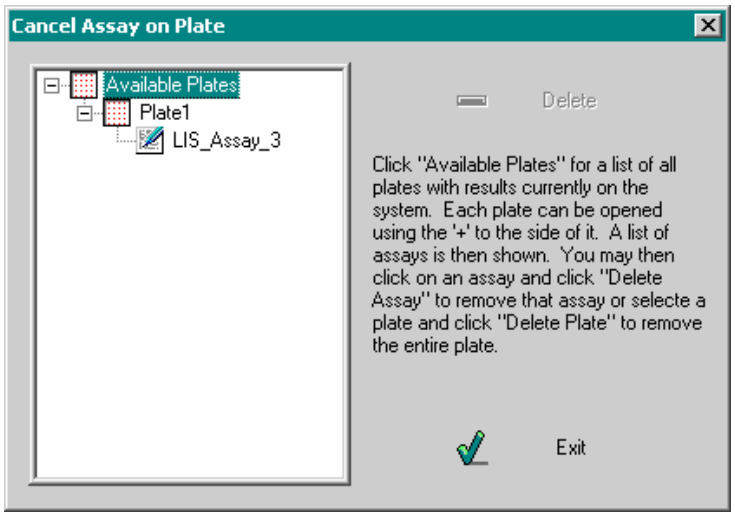

Figure 17 Cancel Assay on Plate

5. Click **Delete**.

   – Or –

   Select a plate then Click **Delete**.

Deleting Results Without Transmitting Them

Results can also be deleted without sending them to the LIS.

1. Set the results status to “Delete” (see *Updating result status settings* on page 31).
2. Select **Remove Test Results Marked as Deleted** under Delete Operations in the Operations menu.

Exporting Results

Select **Export Result Information to HTML File** from the Operations Menu to save result values in an external file on disk.

Chapter 8 Step By Step Procedures

This chapter summarizes the procedures to interface the DSX with the host computer for the exchange of test orders and results.

☞ ***Note**: Page numbers are provided at the end of each step if additional details are available in this manual. Otherwise information can be found in the Revelation DSX Operator's Manual.*

Installation and Configuration

Complete the steps below to establish the connection between the DSX and host computer.

1. Install Revelation DSX.
2. Install LIS-Link software including appropriate vendor DLLs (see page 23).
3. Configure the LIS-Link software using the LIS-Link GUI (see page 27).
4. Configure Revelation DSX and PC.

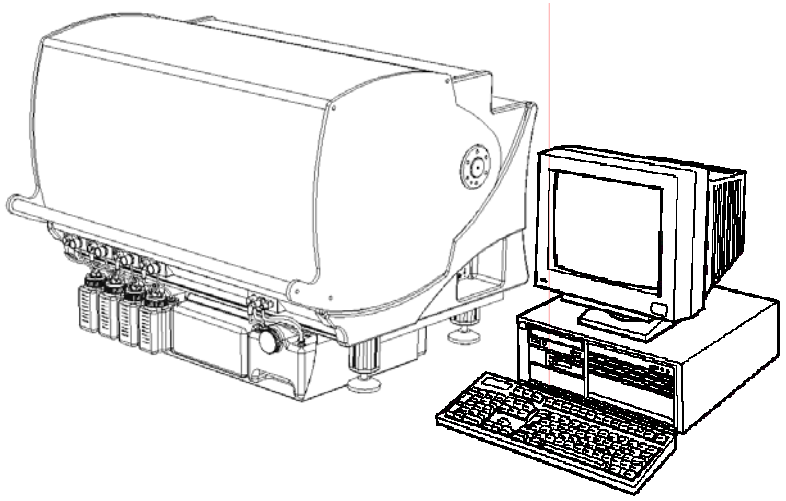

Figure 18 Revelation DSX and PC

Running a Test Batch

Once installation and configuration are complete follow these procedures to process test runs.

1. Create an assay using Revelation DSX software.

   ☞ ***Note**: Make sure to save the assay.*

2. Create a new worklist.

   ☞ ***Note**: Make sure scanning and using LIS are selected during the worklist creation.*

3. Perform the scanning.
4. Select the assays to be run.
5. Perform required operations, loading fluids, etc…
6. Allow the test runs to go to completion.
7. Review the plate data.
8. Start the LIS-Link GUI (see page 25).
9. Click on the name of the assay that was run and review all results returned by Revelation DSX (see page 31).

   ☞ ***Note**: Make sure **Send** is selected for the results to be transmitted to the LIS host computer.*

10. After the review is complete, transmit the results to the host computer (see page 32).

Index

aborted assays, 28
ACK, 8
ASTM E1381, 3, 9
ASTM E1394, 1, 13
  message header record, 17
  patient information record, 14, 18, 19, 20
  patient manufacturer record, 15
  request information record, 13, 20
  result record, 16
  test order record, 14
communications, 28
configuration options, 28
creating
  work list, 38
custom protocol, 5
  overview, 5
  packets, 7
  process diagram, 6
customize defaults, 28
deleting
  pending orders, 33
  results before transmission, 36
  transmitted results, 35
DONERECV, 8
DONETRANS, 8
exporting results, 36
FRM, 9
hardware, 2
installing LIS software, 23
memory, 2
NAK, 8
name mappings, 28
network, 1, 5
password, 25
patient name, 32
query style, 13, 28, 29
refresh data, 31
result data, 16
RF, 10
RS-232, 1, 2
  cabling, 3
sample ID, 32
serial, 1, 2, 3, 4
SOM, 7
system options, 28
TCP/IP, 1, 2, 5
  custom protocol, 5
test orders
  rejected, 15
  request, 13, 29
  response, 14
vendor dll, 28
video card, 2