SIEMENS

IMMULITE® 2000
IMMULITE® 2000 XPi
Immunoassay Systems

IMMULITE® 2000 Immunoassay Systems

Operator's Guide

REF 10793630 Rev. 02, 2019-03

CE

© 2014–2019 Siemens Healthcare Diagnostics. All rights reserved.

No part of this operator's guide or the products it describes may be reproduced by any means or in any form without prior consent in writing from Siemens Healthcare Diagnostics.

IMMULITE and VersaCell are trademarks of Siemens Healthcare Diagnostics.

RealTime Solutions is a servicemark of Siemens Healthcare Diagnostics.

DRD and Dual Resolution Diluter are trademarks of DRD Diluter Corporation.

Windows and Microsoft are trademarks of Microsoft Corporation.

Lotus is a trademark of IBM Corporation.

LUMIGEN is a trademark of LUMIGEN.

Tygon is a trademark of Saint-Gobain Corporation.

Westgard QC is a trademark of Westgard QC, Inc.

Bio-Rad is a trademark of Bio-Rad Laboratories, Inc.



Legal Manufacturer
Siemens Healthcare Diagnostics Inc.
62 Flanders Bartley Road
Flanders, NJ 07836 USA

Siemens Healthineers Headquarters
Siemens Healthcare GmbH
Henkestraße 127
91052 Erlangen
Germany
Phone: +49 9131 84-0
siemens-healthineers.com

The information in this operator's guide was correct at the time of printing. However, Siemens continues to improve products and reserves the right to change specifications, equipment, and maintenance procedures at any time without notice.

If the system is used in a manner differently than specified by Siemens, the protection provided by the equipment may be impaired. Refer to caution, warning, and import statements.

Table of Contents

1 Introduction

2 Operating the System

3 Adjusting the System

4 Quality Control

5 Performing Maintenance

6 Troubleshooting

7 Data Management

8 Configuring the System

9 Allergy

Appendix A: Safety Instructions

Appendix B: Service, Ordering, and Warranty

Appendix C: Optional Direct Water Feed

Appendix D: Supplies

Appendix E: System Specifications

Appendix F: Symbols and Labels

Appendix G: Installation and Relocation

Appendix H: Error Messages

Appendix I: Hepatitis Confirmatory Testing

1 Introduction

Introduction

Using This Guide 1-1
Conventions 1-1
Terminology 1-3
IMMULITE 2000 Systems Overview 1-4
Product Descriptions 1-4
Principles of Operation 1-4
Output Specifications. 1-5
Hardware Overview. 1-5
Pipetting Sequence 1-5
System Components 1-5
Kit Components 1-11
Reagent Wedge. 1-12
Bead Packs 1-13
Adjustors 1-14
Adjustor Barcode Labels 1-14
Controls (QC) 1-14
Kit Barcode 1-14
Instructions for Use (IFU) 1-14
Important Notices. 1-14
Other Test Supplies 1-15
Chemiluminescent Substrate Module 1-15
Probe Wash Module 1-15
Diluent Module 1-15
Software Overview 1-16
IMMULITE 2000 System Home Screen 1-17
Find Button 1-18
Toolbar 1-18
Horizontal Toolbar 1-18
Vertical Toolbar. 1-19
Using the Consumables Report 1-19
IMMULITE 2000 System Menu Screen. 1-20
Menu Screen Tools Panel 1-20
Menu Screen Configurations Panel 1-21
Menu Screen Task Bar 1-22
IMMULITE 2000 XPi Home Screen 1-23

Wedge Status Indicators 1-24
Sample Rack Status Indicator 1-24
Find Button 1-24
Toolbar 1-24
Horizontal Toolbar 1-25
Vertical Toolbar 1-26
IMMULITE 2000 XPi Menu Screen 1-26
Menu Screen Tools Panel 1-27
Menu Screen Configurations Panel 1-27
Menu Screen Task Bar 1-28
Online Help 1-29
Navigating Online Help 1-29
Menu Options 1-30
Viewing an Error Message Help Topic 1-31
Using the Index Feature 1-31
Using the Search Feature 1-32
Initializing the Search Feature 1-32
Searching the Help Database 1-32
Technology 1-33
Data Reduction and the Chemiluminescent Reaction Internal Calculations 1-33
Chemiluminescent Reaction 1-34

Introduction

IMMULITE® 2000 and IMMULITE 2000 XPi systems are intended for professional use in a laboratory environment only. Tests performed are intended for *in vitro* diagnostic use. As with all diagnostic tests, a definitive clinical diagnosis should not be based on the results of a single test, but should only be made by the physician after all clinical and laboratory findings have been evaluated.

Using This Guide

This guide provides information for the following clinical laboratory professionals:

- Operators who perform daily operating tasks such as preparing the system, processing samples, reviewing results, and performing maintenance.
- Key operators who perform daily and other tasks such as reviewing control data, managing data files, and modifying system parameters.

Conventions

The *IMMULITE 2000/2000 XPi Operator's Guide* uses the following text and symbol conventions:

Convention	Description
systems	Refers to instructions for both the IMMULITE 2000 system and the IMMULITE 2000 XPi system.
IMMULITE 2000	Refers to instructions for the IMMULITE 2000 system only.
IMMULITE 2000 XPi	Refers to instructions for the IMMULITE 2000 XPi system only.
 BIOHAZARD	Biohazard statements alert you to potentially biohazardous conditions.
 LASER WARNING	Laser Warning statements alert you to the risk of exposure to lasers.
 WARNING	Warning statements alert you to conditions that may cause personal injury.

Convention	Description
⚠ CAUTION	Caution statements alert you to conditions that may cause product damage or loss of data. On the system, this symbol indicates that you should refer to the operator's guide for more information.
Note	Note statements alert you to important information that requires your attention.
Bold	Bold type indicates commands on the user interface, keys, or the exact text that an operator needs to enter. For example, if the word save displays as **Save**, it refers to selecting the Save button on the user interface. Another example is entering specific text into a text field. If the word welcome displays as **welcome**, it means that you should enter that word into the specified field.
Italic	Italic type refers to the title of a document or a section title in this operator's guide. For example, *System Operation,* in Section 2 refers to Section 2 of this operator's guide. Italics are also used for latin words and phrases.

Terminology

The following table explains some of the special terminology used in this operator's guide and the specific actions that you need to take when you see the terminology:

Term	Description
Select	To select an item, use your finger to touch the item on the touchscreen monitor or select the item with the system pointing device (trackball).
Enter	Enter the specified information using the keyboard, then press the Enter key.
Scan	Move the handheld barcode scanner over the specified barcode to enter the information.

IMMULITE 2000 Systems Overview

This guide includes overviews of the systems, configuration instructions, and operating, maintenance, and troubleshooting procedures.

Product Descriptions

The IMMULITE 2000 and IMMULITE 2000 XPi are continuous random-access systems that perform chemiluminescent immunoassays.

The systems use serum, plasma, amniotic fluid, or urine samples for *in vitro* diagnostic testing and work seamlessly with RealTime Solutions℠ and VersaCell® systems.

The systems automate the entire testing procedure and accommodate high volume testing, generating up to 200 test results per hour.

Primary, secondary, and microsample tubes may be loaded directly on the systems. The IMMULITE 2000 XPi also allows for loading tube top samples onto a conductive Tube Top Sample Rack. A Laboratory Information System (LIS) interface is optional.

Principles of Operation

The systems use assay-specific antibody or antigen-coated polystyrene beads as the solid phase.

A bead is dispensed into a specially designed reaction tube, which serves as the vessel for the incubation, wash, and signal development processes.

After the sample is incubated with an alkaline phosphatase-labeled reagent, the reaction mixture is separated from the bead by spinning the reaction tube at high speed along its vertical axis. The fluid is transferred to a coaxial sump chamber, which is integral to the bead/tube wash station. Up to 4 discrete washes occur within seconds, allowing the reaction tubes to be processed sequentially with uniform timing. The bead remains in the reaction tube with little residual unbound label.

The bound label is then quantified using the dioxetane substrate to produce light. Light is emitted when the chemiluminescent substrate reacts with the alkaline phosphatase label bound to the bead. The amount of light emitted is proportional to the amount of analyte originally present in the sample. This light emission is detected by the photomultiplier tube (PMT) and results are calculated for each sample.

Output Specifications

The following table displays the output specifications for the systems. For a list of all system specifications, refer to *Appendix E, System Specifications*.

Output Specification	Quantity
Throughput	Up to 200 tests per hour
Time to first result	35 minutes
Tests per sample	Limited by sample size

Hardware Overview

Pipetting Sequence

Based on priorities built into the software, sample tubes are processed in the following order:

1. STAT samples
2. Adjustors
3. Controls
4. Labile, for example, intact PTH
5. Patients
6. Verifiers

System Components

The system components are described in this table:

Part	Description
Bead Carousel	A rotating, dehumidified carousel that holds 24 bead packs. The beads are dispensed individually from these test-specific packs.
Bead Pack Barcode Reader	Reads barcodes on the bead packs in the bead carousel. **Note** The bead pack barcode reader is not visible in *Figure 1-1* and *Figure 1-3*.
Bead/tube Wash Station	Washes and spins the bead after the immune reaction to remove residual unbound reagent and sample.

Part	Description
Imaging Scanner or Hand-held 2d Scanner	Reads kit barcodes. Use of allergy requires the imaging scanner to scan allergen wedges loaded with allergen vials. See Chapter 9, *Allergy*. **Note** The scanner is not visible in the figures.
Photomultiplier Tube (PMT)	Measures the photon counts. The PMT is not visible in the figures.
Reaction Tube Hopper	Holds the empty reaction tubes.
Reagent Dual Resolution Dilutor (DRD)	Extracts reagent and water and dispenses the liquid into the reaction tube.
Reagent and Sample Valves	Mechanisms that redirect the flow of liquid used by the Reagent DRD and the Sample DRD.
Reagent Carousel	A rotating carousel that holds 24 reagent wedges or allergen wedges. Because the reagent carousel is refrigerated between 4° to 8°C, reagent wedges can be stored on the system. **Note** For allergen vials, see Chapter 9, *Allergy*.
Reagent Pipettor	Pipettes reagent into the reaction tube.
Sample Carousel	A rotating carousel that holds 6 racks. Each rack holds up to 15 specimen or diluent tubes of varying sizes. The barcodes on the tubes are read as the carousel rotates.
Sample Dilution Well	Mixes specified quantities of specimen, diluent, and water to form a homogenous mixture. The sample probe dispenses the materials into the well for mixing. After the diluted sample is pipetted into the reaction tube, the dilution well insert is spun at a high speed, discarding the unused portion of the diluted sample.

Part	Description
Sample DRD	Extracts sample from the sample tube and dilution well and dispenses it into the reaction tube.
Sample Pipettor	Pipettes sample into the reaction tube.
Sample / Reagent Barcode Scanner	Reads barcodes on the tubes in the sample carousel and on the reagent and allergen wedges in the reagent carousel.
Substrate Pump	Dispenses 200 µL of substrate from the substrate reservoir into the reaction tube.
Tube Processor	Incubates the immune and luminogenic reactions, and measures the light generated by the luminogenic reactions. Reaction tubes are continually agitated at 37°C during these processes.
Water Pump	Accurately dispenses 400 µL water into the reaction tube at the bead/tube wash station.

The following image displays the location of the various IMMULITE 2000 system components.

Figure 1-1: IMMULITE 2000 System (Overhead View)

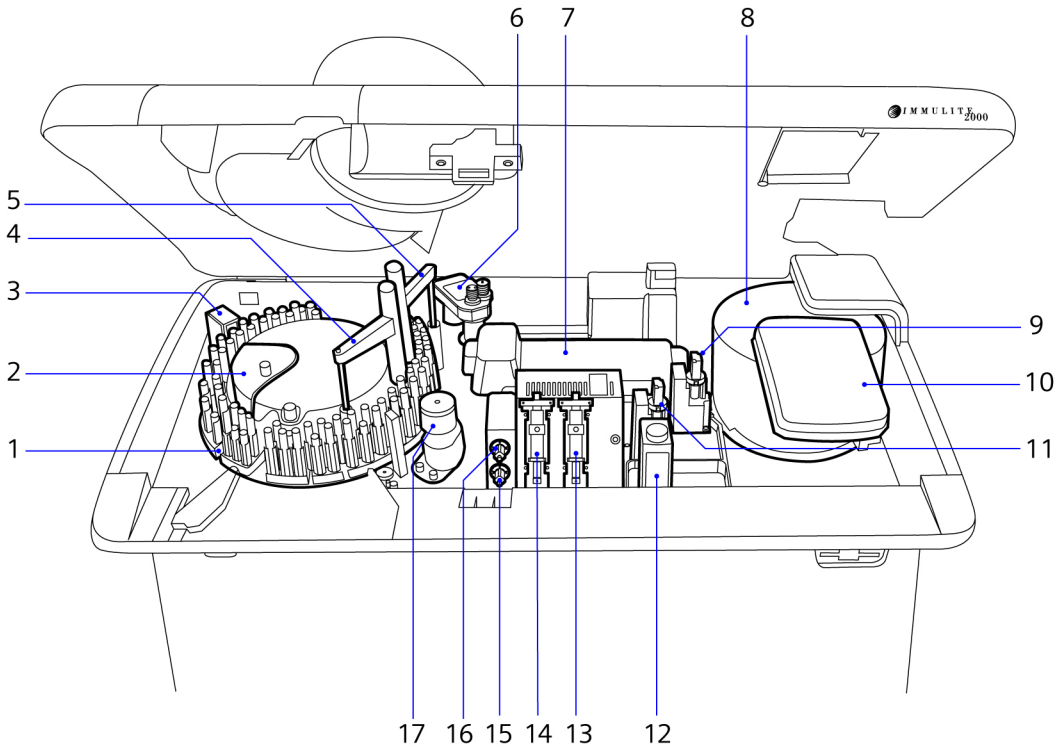

1. Sample Carousel
2. Reagent Carousel (covered)
3. Sample / Reagent Barcode Scanner
4. Sample Pipettor
5. Reagent Pipettor
6. Bead / Tube Wash Station
7. Tube Processor
8. Bead Carousel
9. Water Pump
10. Bead Carousel Cover
11. Substrate Pump
12. Substrate Reservoir
13. Reagent DRD
14. Sample DRD
15. Sample Valve
16. Reagent Valve
17. Sample Dilution Well

The following image displays the front view and locations of the IMMULITE 2000 system, and the items on the shelves inside the system.

Figure 1-2: IMMULITE 2000 System (Front View)

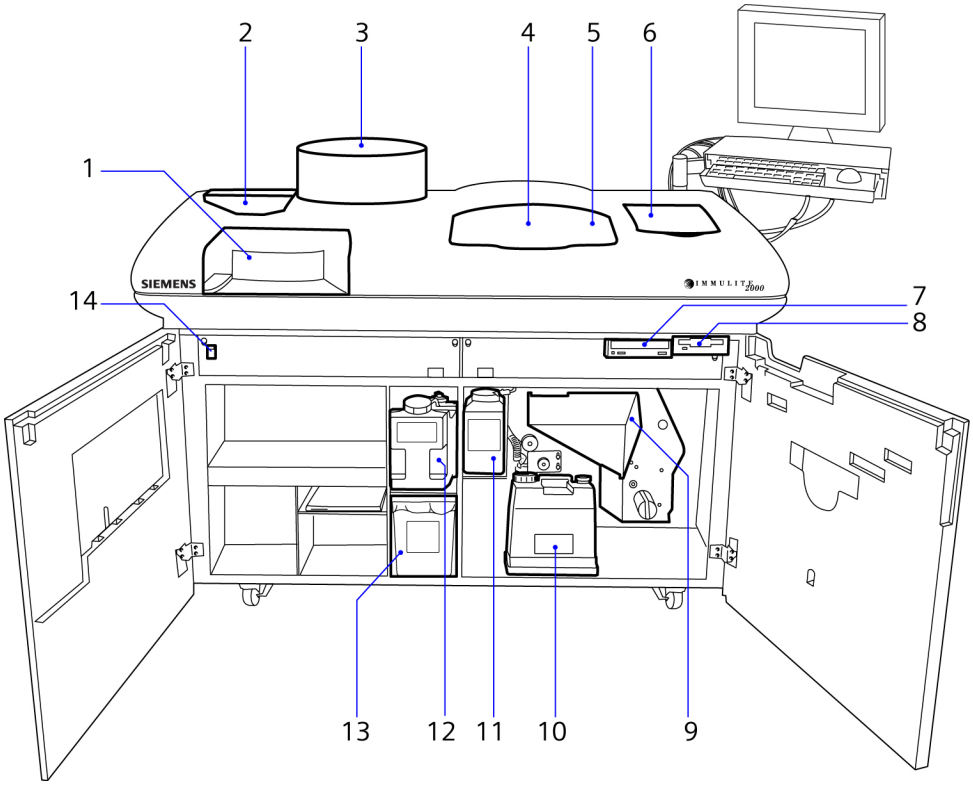

1. Sample Carousel Access Door
2. Reagent Carousel (covered)
3. Pipettors
4. DRD Priming Accessories
5. Substrate Reservoir
6. Bead Carousel
7. CD/DVD Drive
8. Floppy Drive
9. Reaction Tube Hopper
10. Liquid Waste
11. Probe Wash
12. Distilled Water
13. Solid Waste
14. Power Switch

The following image displays the location of the various IMMULITE 2000 XPi system components.

Figure 1-3: IMMULITE 2000 XPi System (Overhead View)

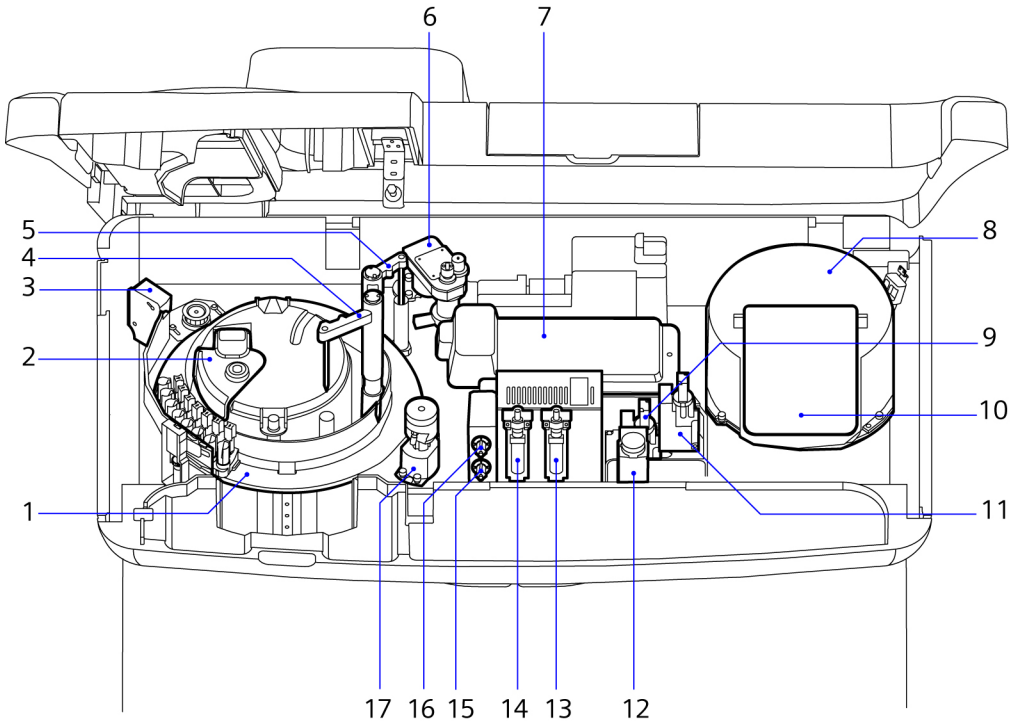

1. Sample Carousel
2. Reagent Carousel (Covered)
3. Sample / Reagent Barcode Scanner
4. Sample Pipettor
5. Reagent Pipettor
6. Bead / Tube Wash Station
7. Tube Processor
8. Bead Carousel
9. Substrate Pump
10. Bead Carousel Cover
11. Water Pump
12. Substrate Reservoir
13. Reagent DRD
14. Sample DRD
15. Sample Valve
16. Reagent Valve
17. Sample Dilution Well

The following image displays the front view and locations of the IMMULITE 2000 XPi system components, and items held on the shelves inside the system.

Figure 1-4: IMMULITE 2000 XPi System (Front View)

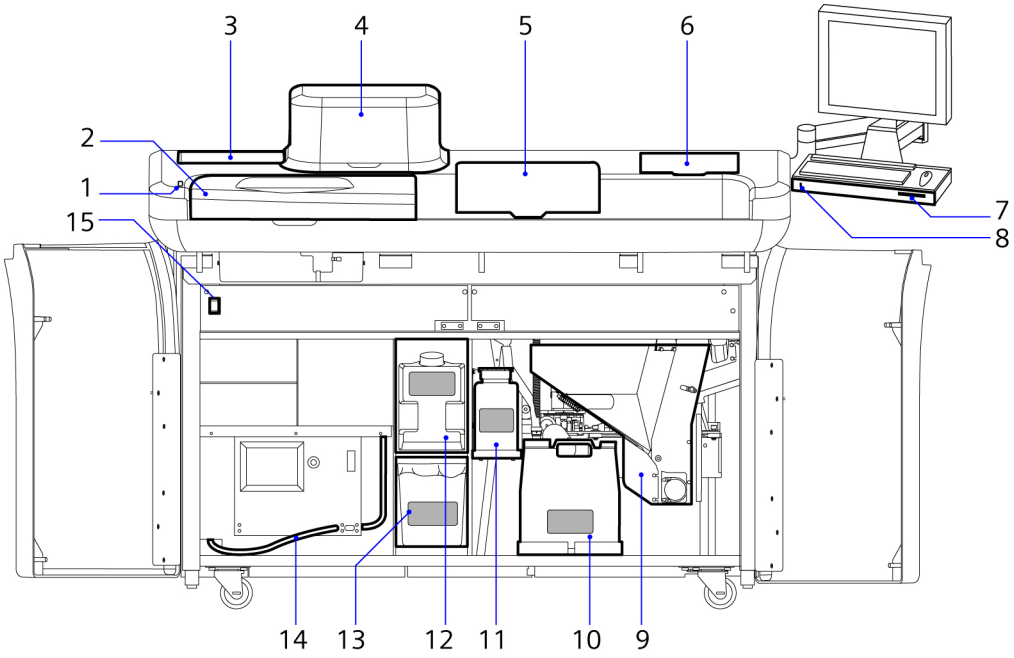

1. Rack Loader Indicator Light
2. Rack Loader for Sample Carousel
3. Reagent Carousel (covered)
4. Sample Pipettor Door
5. DRD Priming / Substrate Reservoir
6. Bead Carousel
7. CD/DVD Drive
8. USB Port
9. Reaction Tube Hopper
10. Liquid Waste
11. Probe Wash
12. Distilled Water
13. Solid Waste
14. *Direct WaterFeed (Optional)*
15. Power Switch

Kit Components

Test kits include the materials needed to run assays. The following describe the components in a kit:

- Adjustors
- Adjustors barcode Labels

- Bead packs
- Controls (for certain kits)
- Controls barcode Labels (for certain kits)
- Diluents (for assays requiring a pre-dilution)
- Diluent Tube barcode labels
- Kit barcode
- Instructions For Use (IFU)
- Reagent wedges
- Important notices

Reagent Wedge

A barcoded reagent wedge contains an assay-specific enzyme conjugate. The reagent is pipetted into the reaction tube. For an example of a reagent wedge label, see *Figure 1-5*.

Figure 1-5: Reagent Wedge Label

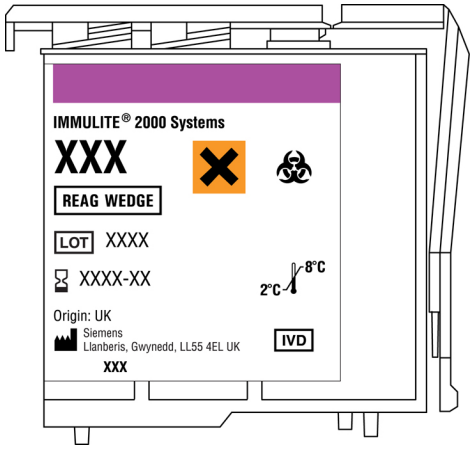

For an example of the reagent wedge compartments, see Figure 1-6:.

Figure 1-6: Reagent Wedge Compartments (top view)

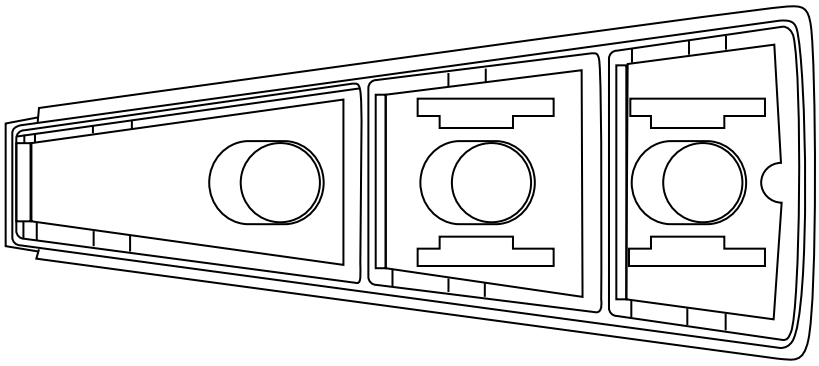

Bead Packs

A bead pack contains the assay-specific beads. A single bead is dropped into a reaction tube. For an example of a bead pack label, see *Figure 1-7*.

Figure 1-7: Bead Pack Label

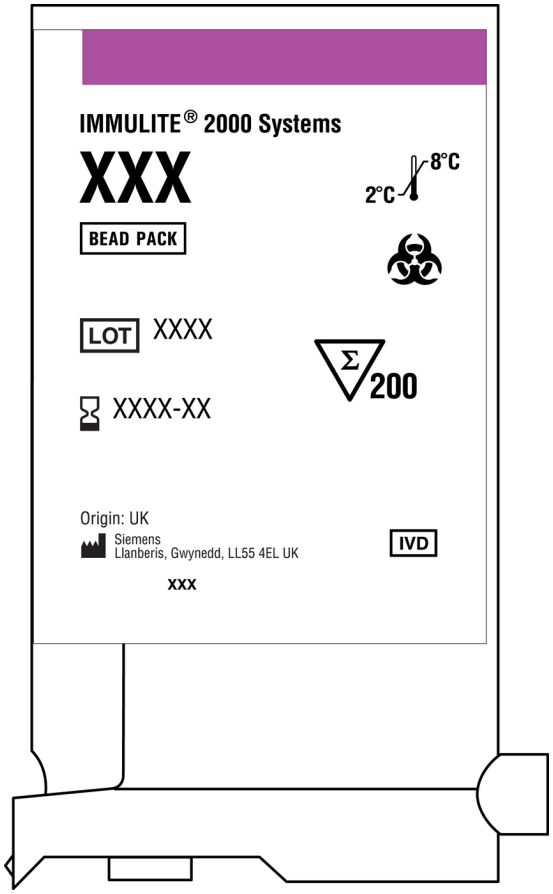

Adjustors

Each kit contains one or two Adjustors. Kits with two adjustors have a LOW and a HIGH adjustor, which contain different concentrations of analyte. The adjustor is in either liquid or lyophilized form.

For more information regarding the adjustors, see the adjustor IFU.

Adjustor Barcode Labels

Each kit contains adjustor barcode labels to be placed on test tubes. The label identifies the tube as an adjustor for that particular test.

Controls (QC)

Controls are run to determine if adjustments are valid. They are also used to verify if the reagent and beads are viable. Some kits, such as infectious disease or allergy kits, require specialized controls that are included in those kits. Controls are available separately for other assays.

Kit Barcode

The 2D kit barcode (see *Figure 1-8*) is located on the box flap inside the kit. Information specific to the kit lot is included in the barcode. You must scan the barcode the first time you use a kit lot.

Figure 1-8: 2D Kit Barcode

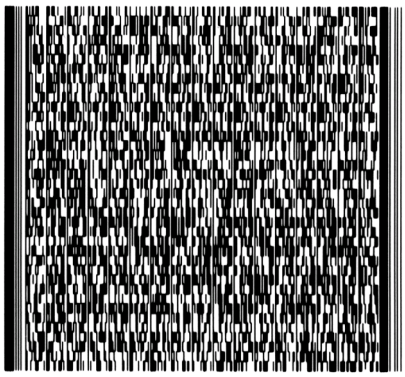

Instructions for Use (IFU)

The IFU contains specific information regarding the assay. Read the IFU before using a new kit.

Important Notices

Important Notices contain information regarding usage of the assay kit components. A sticker on the outside of the kit package alerts the user that an important notice is enclosed.

Other Test Supplies

Note These supplies are not included in the kit.

The following test supplies are needed to run the system:

- Chemiluminescent Substrate
- Probe Wash
- Diluents

Chemiluminescent Substrate Module

The chemiluminescent substrate module includes 2 bottles of chemiluminescent substrate. Store the substrate between 2° and 8°C. Allow substrate to come to room temperature before filling the substrate reservoir. Each bottle of chemiluminescent substrate contains enough material for 1000 tests.

WARNING

Do not fill the substrate reservoir beyond the maximum capacity of 1000 tests. Filling the substrate reservoir beyond the maximum capacity may cause substrate to enter the CO_2 scrubber and cause a blockage. This can result in damage to the system and possible misreporting of results.

CAUTION

Do not leave substrate spills on the load scale. Spilled substrate may cause the load scale to stick and the substrate status indicator to appear full when the substrate reservoir is empty. This could affect results. Immediately clean up any substrate spills using moistened tissues.

Probe Wash Module

The probe wash module contains 2 bottles of probe wash concentrate with barcode labels (~Probe Clean). Store the probe wash module at room temperature. Dilute each 200 mL bottle with 1800 mL of distilled/de-ionized water before using.

Diluent Module

Use diluent for the onboard dilution of patient samples with analyte concentrations above the calibration range. You should barcode diluent tubes for system identification. The diluent is packaged in bulk bottles, along with barcoded labels.

Note Diluent tubes must be 16 x 100-mm tubes.

Software Overview

The software provides tools to direct system operations and manage data. The software also informs the operator of system conditions and provides answers to operator questions.

Note The computer supplied with the system is designed to run the included software. The installation of third-party software applications may adversely affect the proper operation of the system software and/or system.

Certain screens display automatically at the appropriate time, while others are accessible from the toolbars. The horizontal toolbar buttons are along the top, and the vertical toolbar buttons are along the right side. See *Figure 1-9* and *Figure 1-11*.

IMMULITE 2000 System Home Screen

The IMMULITE 2000 Home screen displays a graphical representation of the sample, reagent, and bead carousels, and is touch sensitive.

Figure 1-9: IMMULITE 2000 System Home Screen

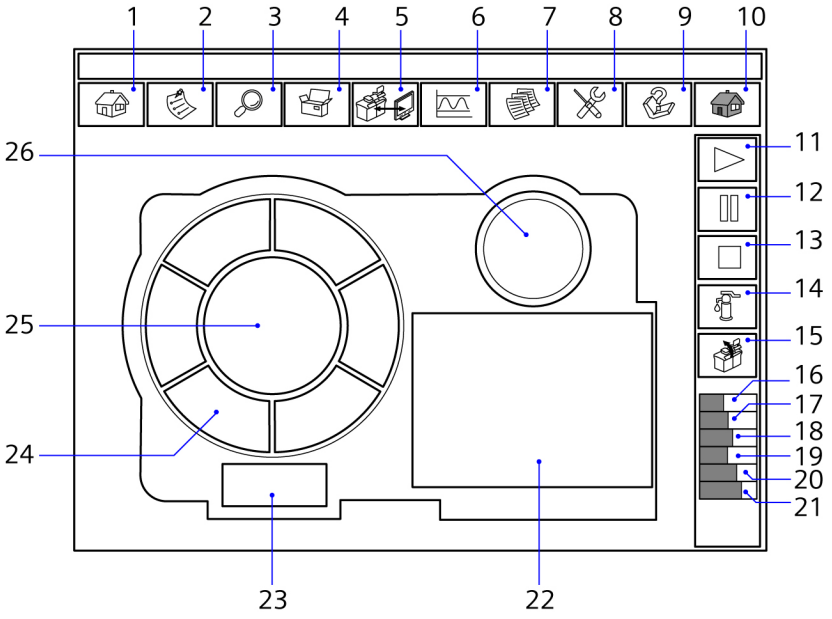

1. HOME
2. WORKLIST
3. REVIEW
4. KITS
5. LIS
6. QC
7. REPORTS
8. MENU
9. HELP
10. LOGOFF
11. RUN
12. PAUSE
13. STOP
14. PRIME
15. COVER
16. WATER
17. WASH
18. SUBSTRATE
19. SOLID WASTE
20. LIQUID WASTE
21. TUBES
22. RESULTS WINDOW
23. FIND
24. SAMPLE RACK
25. REAGENT CAROUSEL
26. BEAD CAROUSEL

Find Button

The following table provides a description of the find button:

Command	Function
FIND	Offers sample search capabilities.

Toolbar

The IMMULITE 2000 system toolbars provide quick access to commands or screens used in routine system operation.

The command buttons on the horizontal toolbar provide tools for data management.

The buttons on the vertical toolbar directly affect system operations. The status indicators under the vertical toolbar display the system fill-levels for water, probe wash, substrate, the tube hopper, and liquid and solid waste.

Use the system pointing device or your finger to select a button on the toolbar.

Note The operator may touch the screen with a bare or gloved hand or with an eraser. Do not use your fingernail or any hard implement such as a pen.

Horizontal Toolbar

The following table provides descriptions of the horizontal toolbar buttons:

Command	Function
HOME	Used to: • Access a sample rack by selecting the rack identifier. • Access the reagent or bead carousel screen by selecting the carousel. Refer to *Figure 1-9*.
WORKLIST	Used to create or modify a worklist.
REVIEW	Used to review test results.
KITS	Used to review kit information and deactivate or activate kits.
LIS	Used to review data received from or sent to the Laboratory Information System (LIS).
QC	Used to enter, configure, and view control information.
REPORTS	Used to print or configure reports.

Command	Function
MENU	Used to access tool and configuration selections.
HELP	Used to access online help.
LOG OFF	Initiates a system back-up and ends the working session.

Vertical Toolbar

The following table provides description of the vertical toolbar buttons:

Command	Function
RUN	Starts the system processing.
PAUSE	Stops the pipettors from processing any new tests, but allows the system to continue to process tests which are already on the system.
STOP	Stops the system from processing. All mechanical movements stop, completed tests are saved, and tests in progress are terminated.
PRIME	Primes the pipettors to remove air from the fluidic lines.
COVER	Releases the lock on the main cover so it can be opened.

Using the Consumables Report

To review the consumables report, perform the following steps:

1. Select **WORKLIST**.
2. Select **Consumables**.
3. Load any kit components that are low or missing.

   Note The next time the Consumables button is selected or the next time the barcodes are read, the button returns to the original color.
4. To remove the consumables report from the screen, select **CLOSE**.

IMMULITE 2000 System Menu Screen

The Menu screen enables you to access tools and configuration settings. Select **MENU** from the horizontal toolbar.

Figure 1-10: IMMULITE 2000 Menu Screen

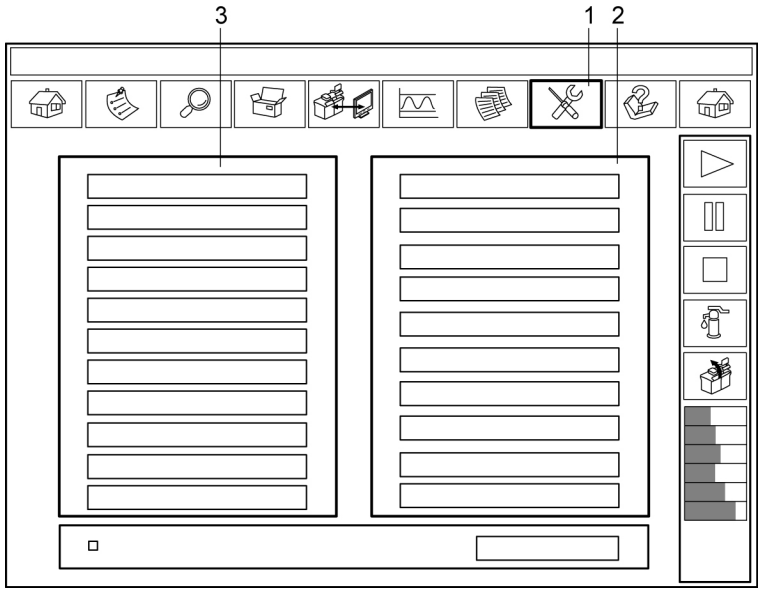

1. MENU button
2. Configurations panel
3. Tools panel

Menu Screen Tools Panel

The following table provides descriptions of the tools buttons:

Tools	Description
Formfeed	Prints all the data ready to print.
Export Data	Displays the Export Data screen, which is used to export data to the Screen, a File, or the Printer.
Sample Tubes in Racks	Displays color-coded tubes on the sample carousel.
Temperatures	Displays the system temperature and humidity levels.
Day Error Log	Displays the Daily Error Log.
Debug Form	For use by Siemens personnel only.

Tools	Description
Beads and Reagents Onboard	Displays details of the beads and reagents onboard the system.
Allergens Onboard	Displays details regarding the allergens onboard the system.
Adjustment Log	Displays the adjustment history.
Find Last Tube Location	Displays the rack and position where a specified barcoded tube was last located.

Menu Screen Configurations Panel

The following table provides descriptions of the configuration buttons:

Configurations	Description
Configure	Select to configure system settings including Display Options, Automatic Dilutions, System Identification, LIS and Configuration Settings.
Test Ranges	Select to specify reference ranges.
Allergen Ranges	Displays the ranges of immunoglobulin concentrations for allergic reactions.
Reflexive Tests	Select to specify tests to perform when a result is within or outside a specified range.
Panels	Select to create or change a panel.
Units	Select to change the reporting units for a specific assay.
Auto Rack	Select to view the contents of an automation rack when the instrument is connected to a VersaCell system.
Confirm HBS	Select to order HBS confirmatory tests and print results.
Onboard Confirmatory Testing	Select to configure Automated Hepatitis B Surface Antigen Confirmatory Testing.

Menu Screen Task Bar

The following table provides descriptions of the task bar buttons:

Options	Description
Hide Names	Select to hide patient names on the following screens: • Export data (Screen, File, or Print) • Review • LIS • Worklist
About	Displays the software version and the EMERGENCY SHUTDOWN button.

IMMULITE 2000 XPi Home Screen

The IMMULITE 2000 XPi Home screen displays a graphical representation of the sample, reagent, and bead carousels, and is touch sensitive.

Figure 1-11: IMMULITE 2000 XPi Home Screen

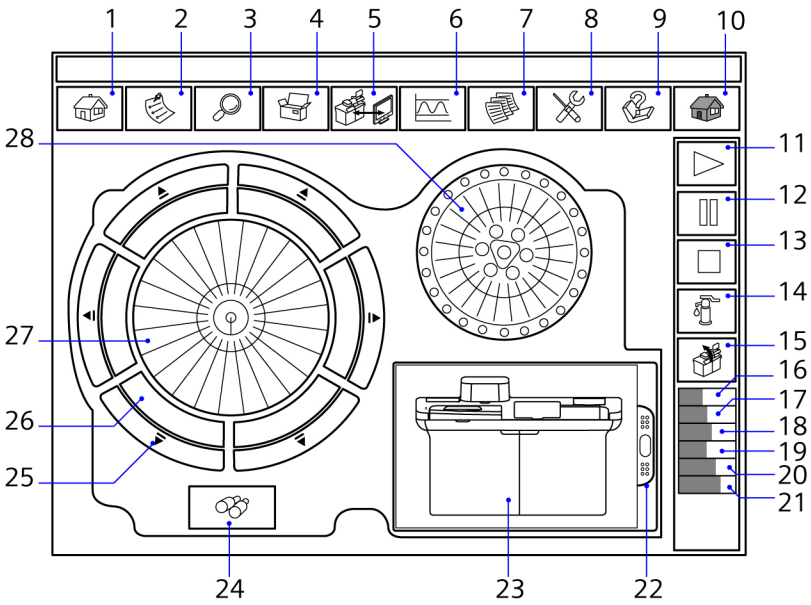

1. HOME
2. WORKLIST
3. REVIEW
4. KITS
5. LIS
6. QC
7. REPORTS
8. MENU
9. HELP
10. LOGOFF
11. RUN
12. PAUSE
13. STOP
14. PRIME
15. COVER
16. WATER
17. WASH
18. SUBSTRATE
19. SOLID WASTE
20. LIQUID WASTE
21. TUBES
22. RESULTS / SYSTEM WINDOW TOGGLE
23. RESULTS / SYSTEM WINDOW
24. FIND
25. RACK EJECT
26. SAMPLE RACK
27. REAGENT CAROUSEL
28 BEAD CAROUSEL

Wedge Status Indicators

The colors displayed on the reagent wedge and bead pack indicate the status:

Color	Status
Red	Error
Yellow	Warning
White	Ok to Run

Sample Rack Status Indicator

The colors displayed on the sample rack indicate the status:

Color	Status
Red	Error
Gray with identifier	Sample rack in position without errors.
Gray without identifier	No rack present

Find Button

The following table provides a description of the find button:

Command	Function
FIND	Offers sample search capabilities.

Toolbar

The IMMULITE 2000 XPi system toolbars provide quick access to commands or screens used in routine system operation.

The command buttons on the horizontal toolbar provide tools for data management.

The buttons on the vertical toolbar directly affect system operations. The status indicators under the vertical toolbar display the system fill-levels for water, probe wash, substrate, the tube hopper, and liquid and solid waste.

Use the system pointing device or your finger to select a button on the toolbar.

Note The operator may touch the screen with a bare or gloved hand or with an eraser. Do not use your fingernail or any hard implement such as a pen.

Horizontal Toolbar

The following table provides descriptions of the horizontal toolbar buttons:

Command	Function
HOME	Used to: • Manually release a sample rack by selecting the RACK EJECT button. **Note** If a bad barcode is scanned, the rack identifiers may display in uppercase or lowercase alpha or numeric. • Access a sample rack by selecting the rack identifier. • Access the reagent or bead carousel screen by selecting the reagent or bead pack. Refer to *Figure 1-11*.
WORKLIST	Used to create or modify a worklist.
REVIEW	Used to review test results.
KITS	Used to review kit information and deactivate or activate kits.
LIS	Used to review data received from or sent to the Laboratory Information System (LIS).
QC	Used to enter, configure, and view control information.
REPORTS	Used to print or configure reports.
MENU	Used to access tool and configuration selections.
HELP	Used to access online help.
LOG OFF	Initiates a system back-up and ends the working session.

Vertical Toolbar

The following table provides descriptions of the vertical toolbar buttons:

Command	Function
RUN	Starts the system processing.
PAUSE	Stops the pipettors from processing any new tests, but allows the system to continue to process tests which are already on the system.
STOP	Stops the system from processing. All mechanical movements are stopped, completed tests are saved, and tests in progress are terminated.
PRIME	Primes the pipettors to remove air from the fluidic lines.
COVER	Releases the lock on the main cover so it can be opened.

IMMULITE 2000 XPi Menu Screen

The Menu screen enables you to access tools and configuration settings. Select **MENU** from the horizontal toolbar.

Figure 1-12: IMMULITE 2000 XPi Menu Screen

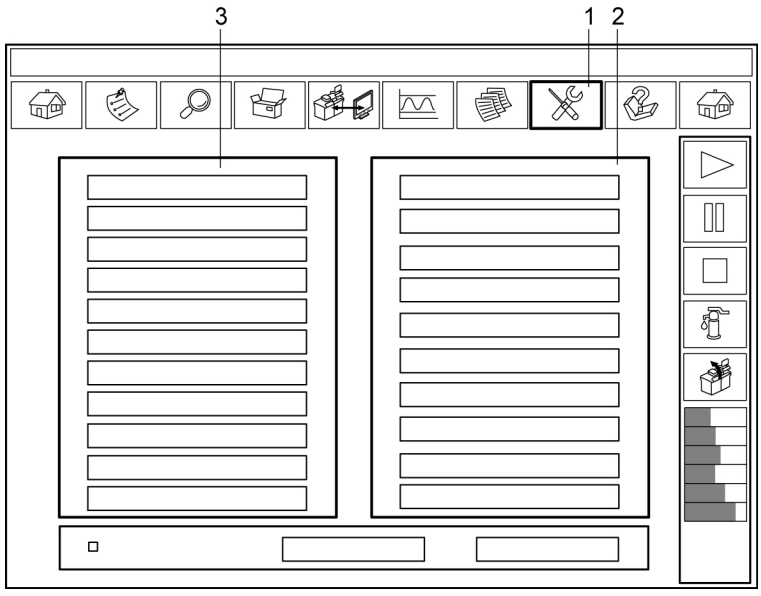

1. MENU button
2. Configurations panel
3. Tools panel

Menu Screen Tools Panel

The following table provides descriptions of the tools buttons:

Tools	Description
Formfeed	Prints all the data ready to print.
Export Data	Displays the Export Data screen, which is used to export data to the Screen, a File, or the Printer. Refer to *Exporting Data*, page 7-1.
Sample Tubes in Racks	Displays color-coded tubes on the sample carousel.
Temperatures	Displays the system temperature and humidity levels.
Day Error Log	Displays the Daily Error Log.
Debug Form	For use by Siemens personnel only.
Beads and Reagents Onboard	Displays details regarding the beads and reagents onboard the system.
Allergens Onboard	Displays details regarding the allergens onboard the system.
Adjustment Log	Displays the adjustment history.
Find Last Tube Location	Displays the rack and position where a specified barcoded tube was last located.
Scheduled QC	Defines a schedule for performing quality control assays at specified times and/or during AutoStart.

Menu Screen Configurations Panel

The following table provides descriptions of the configuration buttons:

Configurations	Description
Configure	Select to configure system settings including Display Options, Automatic Dilutions, System Identification, LIS and Configuration Settings.
Test Ranges	Select to specify reference ranges.
Allergen Ranges	Displays the ranges of immunoglobulin concentrations for allergic reactions.
Reflexive Tests	Select to specify the test to perform when a result is within or outside a specified range.

Configurations	Description
Panels	Select to create or change a panel.
Units	Select to change the default units for a specific test.
Auto Rack	Select to view the contents of an automation rack when the instrument is connected to a VersaCell system.
Confirm HBS	Select to order HBS confirmatory tests and print results.
Onboard Confirmatory Testing	Select to configure Automated Hepatitis B Surface Antigen Confirmatory Testing.
AutoStart Configuration	Select to configure the system to automatically process routine maintenance tasks and turn automatic substrate dispense on or off.

Menu Screen Task Bar

The following table provides descriptions of the task bar buttons:

Options	Description
Hide Names	Select to hide patient names on the following screens: • Export data (Screen, Print, or File) • Review • LIS • Worklist
Run AutoStart	Select to start the maintenance tasks automatically. Refer to *AutoStart Maintenance (IMMULITE 2000 XPi System)*, page 5-1. The system must be in STOP mode for AutoStart to begin processing.
About	Displays the software version and the EMERGENCY SHUTDOWN button.

Online Help

Select **HELP** on the toolbar for information about the operation of the system and its software. The online help software includes complete operating, maintenance, and troubleshooting procedures about the currently displayed screen.

To access online help, perform the following steps:

1. At the Home screen, select **HELP**.
2. At the Help window, select **Help Topics** to display a list of help topics.

   The Help screen displays help topics in the left pane and information about a highlighted topic in the right pane.

Navigating Online Help

Help is organized much like books in a library. A book icon represents each help topic with sub-topics displayed as chapters within the topic. The toolbar buttons can be used to display all online help topics and allow navigation within the topics.

The Help window lists system operating procedures that are common within normal day-to-day operation. To locate maintenance procedures, solutions for error messages, and checklists for secondary operator training, perform the following steps:

1. To move from topic to topic, select the plus symbol (+) next to the book icon.

   The sub-topics within that topic display.
2. To move to the previously viewed topic, select **Back**.
3. To move forward or backward through sub-topics, select the **<<** or **>>** buttons.
4. Select the sub-topic of interest.

   The information on that sub-topic displays in the right panel of the Help window.

Menu Options

You can access different views and display options within the Help using the menu options:

Menu Option	Function
File	• Open Use to open a Help file. • Print Topic Use to print a Help topic. • Exit Use to exit the Help file.
Edit	• Copy Use to copy text from the help file to the clipboard. • Annotate Use to add information to a specific topic. A paper clip icon displays next to the topic. Select the paper clip icon to display the annotation text.
Bookmark	Define Use to create an electronic bookmark to a specific Help topic.

Menu Option	Function
Options	• Keep Help on Top Options that determine the visual position of the Help window on the screen. - Default – Sets the Help file as always open and visibly in front of all open applications. - On Top – Sets the Help file as always open and visibly in front of all open applications but inactive. - Not on Top – Sets the Help file to open upon user initiation. The Help file minimizes when another application is opened. • Display History Window Opens a window that displays the history of the help topics previously viewed. Double-select a topic to open that Help topic. • Font Changes the size of the font for Help topics. • Use System Colors Sets colors used in the Help file to match those that are used for the PC.
Help	• Version Displays current version and copyright statement for Windows Help. • About WinHelp 2000 Provides WinHelp product description.

Viewing an Error Message Help Topic

To view an error message help topic, at the Error window, select **Help**.

Using the Index Feature

To locate pertinent information alphabetically, use the Index feature.

To access the index, perform the following steps:

1. Select **HELP** from the Horizontal Toolbar.
2. At the Help window, select **Index**.

   A list of indexed contents displays.

3. Select the index topic by clicking the topic.

   The sub-topics (if applicable) within that topic display.

4. Select the index topic of interest.

   The information on that topic displays in the right pane of the Help window.

Using the Search Feature

Use the search feature to search for specific words or phrases in Help. Prior to initial use, the Help software must create a database that lists every word in Help.

Initializing the Search Feature

To initialize the search feature, perform the following:

1. From the Horizontal Toolbar, select **HELP**.
2. At the Help window tabs, select **Search**.
3. Leave the default selection to minimize database size, then select **Next**.
4. To complete the setup wizard, select **Finish**.

   The Search database is now ready for use.

Searching the Help Database

To search for a word or phrase, perform the following steps:

1. In the field below **1. Type the word(s) you wish to find.**, enter a word or phrase.

   The window below **2. Select matching words to narrow search.** displays with matching words.

2. To narrow the search, select a word or phrase.

   The window below **3. Choose topic to display.** displays all topic entries that contain the word or phrase.

3. Select the topic to display.

   The topic displays in the right pane of the help window with the search results highlighted.

Technology

Data Reduction and the Chemiluminescent Reaction Internal Calculations

This section provides a step-by-step description of the internal calculations performed by the system when determining test results:

1. Because the system's ultra-sensitive assays can produce up to several hundred million counts per second (CPS), the system uses an attenuator disk in front of the photomultiplier tube (PMT) to provide accurate readings over a very broad range of light signals. This attenuator disk has three positions:
   - Closed - completely blocks the PMT
   - Attenuated - positions a neutral density filter in front of the PMT
   - Open - an open, unfiltered position

   The system's attenuation filter restricts the amount of light striking the PMT, ensuring an accurate count, even if the actual light output from the tube exceeds the linear range of the PMT.
2. For each sample, the system takes two one-second readings (dark count in the closed position and a decision count reading in the attenuated position).
3. If the decision count reading indicates the light level is within the working range of the PMT, the attenuator disk moves to the open position; otherwise, it remains in the attenuated position while the sample readings are taken.
4. The system takes five one-second readings.
5. The average of the last 10 dark-count readings is subtracted from each of the five readings of the sample tube and the average of the five readings is then calculated.

   Note A dark count reading is taken every 18 seconds when a Reaction Tube is in the read position.
6. If the counts were measured attenuated, the mean of the five individual readings is multiplied by the system-specific attenuation factor to estimate what the reading would have been if it could have been taken without the attenuator.
7. CPS (unattenuated)= CPS (attenuated) x attenuation factor
8. To determine analyte concentrations, the system uses the counts together with the adjustment data and the master curve.

Chemiluminescent Reaction

This section provides a brief overview of the chemiluminescent reaction used in the system.

During the initial immune reaction between the reagent antibodies and the analyte in the sample, that component of the reagent labeled with alkaline phosphatase (known as the conjugate) is bound to the bead within the reaction tube. The amount of alkaline phosphatase bound is directly proportional (for a sandwich assay), or inversely proportional (for a competitive assay) to the concentration of the analyte in the patient sample.

After the reaction tube is washed, a luminogenic substrate is added to the reaction tube.

Five minutes later, the reaction tube arrives in front of the photomultiplier tube (PMT), where the light generated by the luminogenic reaction is measured. The enzyme-amplified reaction in the system produces a prolonged output of light causing the tube to glow.

In the luminogenic reaction (see *Figure 1-13*), the substrate (an adamantyl dioxetane phosphate) is dephosphorylated into an unstable intermediate by the alkaline phosphatase bound on the bead. The unstable intermediate rapidly and spontaneously breaks down, emitting a photon of light. The amount of light emitted is directly proportional to the amount of bound alkaline phosphatase.

LUMIGEN PPD: 4-methoxy-4-(3-phosphatephenyl)-spiro-(1,2-dioxetane-3,2´-adamantane).

Figure 1-13: Chemical Reaction of System Substrate

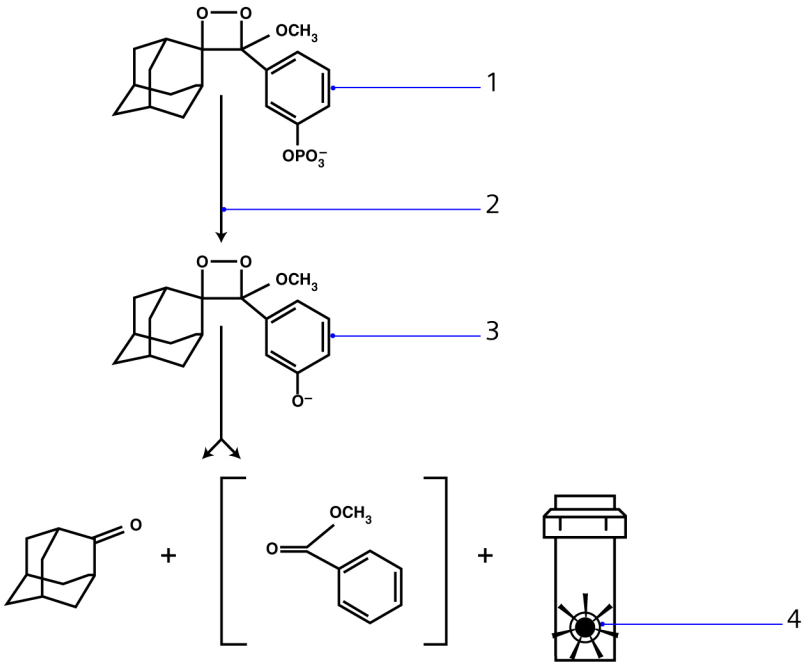

1. Dioxetane phosphate (stable)
2. Alkaline phosphatase label
3. Dioxetane (unstable)
4. Light (hv)

2 Operating the System

Managing Sample Racks 2-1
Labeling and Loading Sample Tubes 2-1
Preparing Samples for Loading 2-1
Loading Samples onto the IMMULITE 2000 System 2-4
Loading Samples onto the IMMULITE 2000 XPi System 2-5
Loading Microsamples 2-7
Tube Top Sample Cups (IMMULITE 2000 XPi System) . . . 2-8
Automated Test Process. 2-11
Operating Modes 2-12
RUN Mode 2-12
PAUSE Mode. 2-12
STOP Mode. 2-13
IMMULITE 2000 XPi System AutoStart Mode 2-13
Maintaining Reagent Wedges and Bead Packs 2-13
Onboard Stability of Kit Components 2-13
Checking the Status of Reagent Wedges. 2-13
Reagents Screen. 2-13
Background Color. 2-14
Error Messages. 2-14
Viewing Wedge Detail 2-15
Replacing Reagent Wedges 2-16
Check for Moisture at the Top of the Wedge 2-18
Checking the Status of Bead Packs 2-18
Using the Beads Screen 2-18
Background Color. 2-19
Error Messages. 2-19
Viewing Bead Pack Detail. 2-20
Replacing Bead Packs. 2-20
Managing Kits. 2-23
IMMULITE 2000 XPi Kit Load Report 2-23
Viewing the Kit Load Report 2-23
Kit Load Report Data 2-24
Printing the Kit Load Report. 2-24
Reviewing the Printed Report 2-25
Entering a Kit 2-26
For Immunoassay Kits 2-26
For Allergy Kits. 2-26
Operational Notes 2-27
Scanning a 2D Kit Barcode Using a 2D Scanner 2-27

Scanning a 2D Kit Barcode Using an Imaging Scanner 2-27
Reviewing Kit Information 2-28
Configuring Kit Lot Deactivation 2-30
Kit Deactivation Status 2-32
Adjusting an Assay 2-32
Loading an Adjustor 2-33
Adding an Adjustor to a Worklist 2-34
Barcoded Adjustors 2-34
Adjustors Without Barcodes 2-35
Adjustment Printout 2-36
Adjustment Complete 2-37
Adjustment Was Not Successful 2-37
Checking Adjustment Validity 2-38
Viewing the Adjustment Log 2-39
Managing a Worklist 2-39
Adding Controls to a Worklist 2-40
Barcoded Controls 2-40
Controls Without Barcodes 2-42
Adding Patients to a Worklist 2-43
Barcoded Patient Samples 2-44
Damaged or Missing Patient Barcodes 2-46
Adding Tests to Samples Without Barcodes 2-48
Test Entry Options 2-49
Selecting a Panel 2-49
Assigning Tests to an Entire Rack 2-50
Diluting Samples 2-51
Diluting Samples Onboard 2-52
Diluents with Damaged or Missing Barcodes 2-53
Canceling an Onboard Dilution 2-54
Specifying Manually Diluted Samples 2-54
Adding Calibration Verifiers to a Worklist 2-55
Worklist Display Options 2-56
Displaying a Worklist 2-57
Printing a Worklist 2-57
Deleting a Worklist Entry 2-58
Modifying a Worklist Entry 2-58
Modifying a Worklist Entry from the Worklist Entry Screen 2-59
Modifying a Worklist Entry from the Worklist Display/Edit screen 2-59
Saving and Importing a Worklist 2-59
Importing a Worklist 2-60
Checking Kit Components from the Worklist Entry Screen 2-60
Find Last Tube Location 2-61

Test Status 2-61
Using Sample Tubes in Racks to Check a Sample Status 2-62
Checking the Tests Ordered and Time Remaining 2-62
Using FIND to Check a Sample Status 2-63
Reviewing Results 2-64
Changing the Time Period 2-65
Searching for a Result 2-66
Reviewing LIS Results 2-67
Sending Results to the LIS 2-69
Resending Data 2-69
Clearing LIS Data 2-69

System Operation

This section provides information about operating IMMULITE 2000/2000 XPi systems.

Managing Sample Racks

Labeling and Loading Sample Tubes

Note The system only accepts barcodes containing the following valid characters: the numbers 0–9, letters A-Z, characters (+), (-), (.), (#), (\), (~), and a blank space ( ). Barcodes containing invalid characters will not be accepted.

The system recognizes 4 barcode symbologies:

- Code 39
- Code-A-Bar
- Code 128
- I-2 of 5 (Interleaved)

I-2 of 5 includes different dialects; therefore, you must configure the system before running a sample with this barcode. For information about this configuration, contact your local technical support provider.

Note The IMMULITE 2000 systems test kits include materials needed to run that assay. Diluents are only included for pre-diluted assays.

Before loading sample tubes onto the system, verify that barcode labels are not scratched, marred, positioned incorrectly, or rendered unreadable by any marks or spills. Also, inspect the sample rack and its barcode labels for any damage.

Preparing Samples for Loading

To prepare samples for loading, perform the following steps:



WARNING

Handle samples carefully to avoid agitation that might introduce bubbles. Bubbles in the sample tube can potentially cause incorrect results. Prior to processing samples, carefully inspect the sample tubes and eliminate all bubbles.

WARNING

Ensure sample tubes do not have obstructions, such as caps or foil, in the tube opening. An obstruction in the tube opening will affect pipettor level sensing, which may create a risk of incorrect results.

Place barcode labels on the sample tubes:

a. Place the bottom edge of the label at least 13 mm (0.5 inch) from the bottom of the tube.

Figure 2-1: Label Positioning

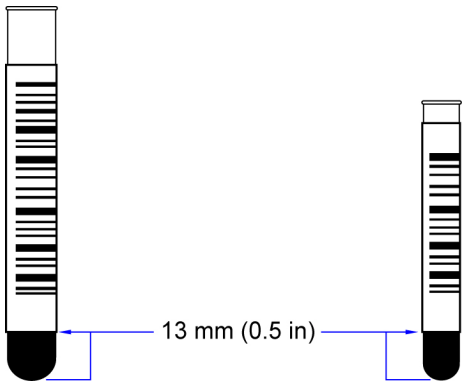

b. Make sure the labels are visible in the tube guide reading screen or directly above the tube guide reading screen.

Figure 2-2: Section of a Sample Rack

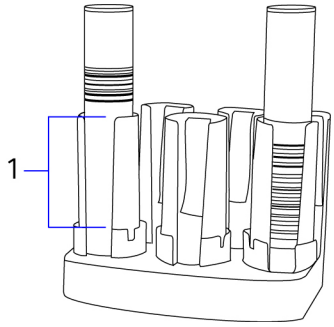

1. Tube guide reading screen

Sample Volume and Approved Tube Sizes

WARNING

Do not use sample cups placed in the tops of primary collection tubes on the IMMULITE 2000 system. Placing sample or nesting cups in a primary tube may cause the system to use an inaccurate sample volume during testing. The principle risk is undetected short sampling from the cup, creating a risk of erroneous results.

Only the IMMULITE 2000 XPi system supports this type of testing on the tube top rack with the approved tube top sample cups/nesting cups.

WARNING

Ensure that you use only 16 x 100 mm tubes for diluents. Using narrower or shorter tubes can cause short-sampling of the diluent under certain conditions.

The following primary and secondary round bottom tube sizes may be used.

Approved Tube Sizes	
12 x 75 mm	12 x 100 mm
13 x 75 mm	13 x 100 mm
16 x 75 mm	16 x 100 mm

To process small sample volumes, use only the microsample tubes and tube holders available with the IMMULITE 2000 systems (see *Loading Microsamples*, page 2-7) or IMMULITE 2000 XPi tube top sample cups (see *Tube Top Sample Cups (IMMULITE 2000 XPi System)*, page 2-8).

For standard sample rack labels, use uppercase letters A–Z, and for IMMULITE 2000 XPi tube top sample rack labels use lowercase letters a–z.

The sample volume required varies with the assay to be run and the number of replicates requested on that sample.

The exact sample volume required for each test can be found in the corresponding Instructions For Use (IFU).

Note Proper operation of the system requires 250 µL of sample dead volume.

If the sample has insufficient volume, an error message displays and "Sample Error" displays on the Worklist Display/Edit screen.

Loading Samples onto the IMMULITE 2000 System

To load samples, perform the following steps:

1. At the Home screen, select the letter corresponding to the appropriate sample rack or an empty rack position.

   The sample carousel rotates so the rack is accessible.

2. To remove a sample rack from the system, perform the following steps:
   a. Lift the Sample Carousel Access Door.
   b. Grasp the sample rack finger indentations and pull the rack forward until it slides out.



WARNING

Use only the tube sizes listed in *Sample Volume and Approved Tube Sizes*, page 2-3, and ensure the tubes are firmly seated in the sample racks. If you use the wrong size tubes or do not seat the tubes as instructed, sampling problems or incorrect results may occur.

3. Load the controls, patient samples, and diluents in the sample rack, positioning the tubes so the barcodes face out.

   Ensure that the bottom of the barcode label is not obscured by the sample rack. The entire label must be readable.

4. After you place samples in the sample rack, slide it back into the carousel, making sure the sample rack snaps into position.
5. Repeat steps 1–4 until all controls, samples, and diluents are loaded onto the system.
6. Close the sample carousel door.
7. Select **RUN** to interrogate the sample carousel.

Loading Samples onto the IMMULITE 2000 XPi System

To load samples, perform the following steps:

WARNING

Use only the tube sizes listed in *Sample Volume and Approved Tube Sizes*, page 2-3, and ensure the tubes are firmly seated in the sample racks. If you use the wrong size tubes or do not seat the tubes as instructed, sampling problems or incorrect results may occur.

1. To determine if the system is ready for a new sample rack, view the lights to the left of the sample rack loader door. See *Figure 1-4, IMMULITE 2000 XPi System (Front View)*.
   - A solid red light on the sample rack loader indicates the system is not ready to accept a sample rack.

     The light remains red when the sample carousel is full.
   - A flashing red light on the sample rack loader indicates the system has an error loading or ejecting a sample rack.
   - A solid green light on the sample rack loader indicates the system is ready to accept a sample rack.
2. If the system is ready to accept a sample rack, lift the sample rack loader door.
3. Set the sample rack into the sample rack loader.

Figure 2-3: Loading the Sample Rack (IMMULITE 2000 XPi System)

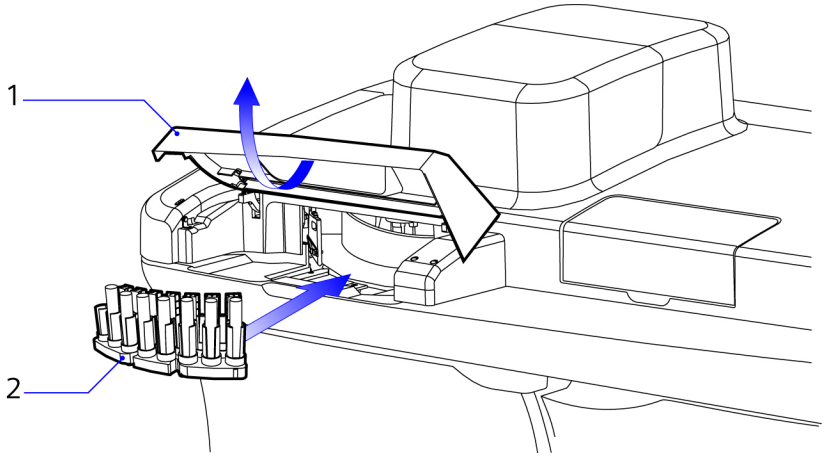

1. Sample rack loader door
2. Sample rack

Note To avoid the sample rack jamming, ensure the sample rack is between the sample rack grabbers.

Figure 2-4: Sample Rack Grabbers (IMMULITE 2000 XPi System)

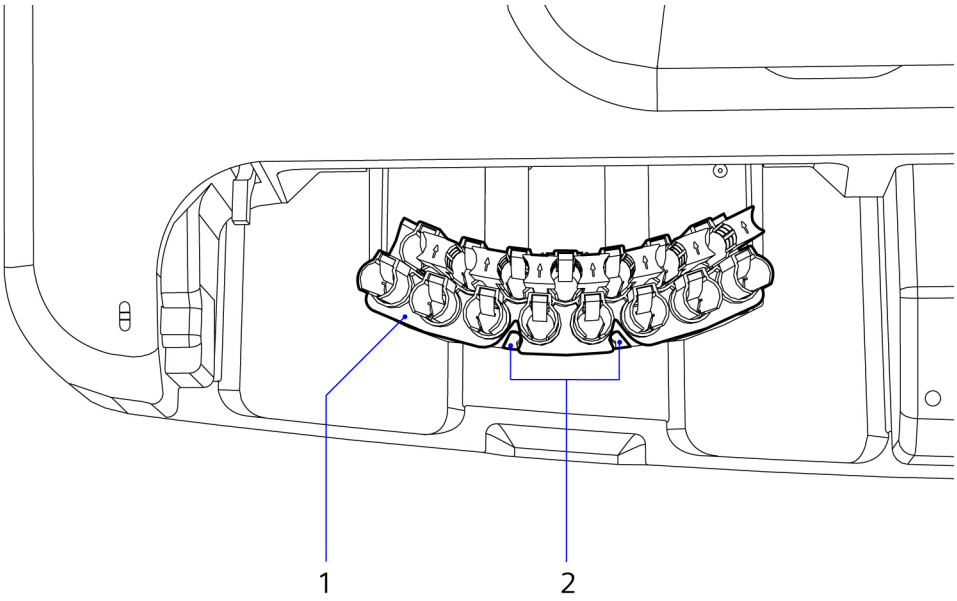

1. Sample rack
2. Sample rack grabbers

4. Close the sample rack loader door.

   The system automatically loads the sample rack onto the carousel.

Loading Microsamples

Microsample tube holders have permanently affixed barcodes. The 10 x 50 mm sample tubes can be barcoded to allow identification of the specimens.

For information about labeling patient sample tubes, see *Labeling and Loading Sample Tubes*, page 2-1.

Figure 2-5: Microsample Tube Holder

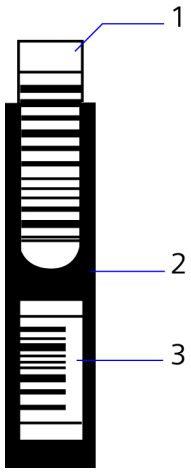

1. 10 x 50 mm microsample tube with patient barcode label
2. Microsample tube holder
3. Microsample holder barcode label (do not remove the label)

The minimum sample volume for an assay is indicated in the IFU for that assay, and with the microsampling feature, the system can operate properly using at least 50 µL of additional sample.

CAUTION

Ensure the microsample tubes are inserted so that they touch the bottom of the sample rack. If they do not touch the bottom of the sample rack, there is a risk of erroneous results. Always follow sample loading instructions completely.

Transfer the sample into a 10 x 50 mm polystyrene microsample tube. Place each tube in a re-usable microsample tube holder that fits on the sample rack.

Note For part numbers, see Appendix D, *Supplies*.

Before loading sample tubes onto the system, verify that barcode labels are not scratched, marred, positioned incorrectly, or rendered unreadable by any marks or spills.

If sample barcode labels are larger than the 10 x 50 mm tubes, run microsample assays without barcodes. To enter patient information manually on samples without barcodes, refer to *Damaged or Missing Patient Barcodes*, page 2-46.

After you place the sample rack on the sample carousel and put the system into RUN mode, order the tests in the same manner as primary and secondary tubes.

Note Schedule no more than 5 tests to pipette from a single microsample tube.

Tube Top Sample Cups (IMMULITE 2000 XPi System)

Only the IMMULITE 2000 XPi supports this kind of testing on the tube top rack with the Approved tube top sample cups/nesting cups.

Note Tube top sample cups are also known as nesting cups or small sample cups.

WARNING

Do not use sample cups placed in the tops of primary collection tubes on the IMMULITE 2000 system. Placing sample or nesting cups in a primary tube may cause the system to use an inaccurate sample volume during testing. The principle risk is undetected short sampling from the cup, creating a risk of erroneous results.

Only the IMMULITE 2000 XPi system supports this type of testing on the tube top rack with the approved tube top sample cups/nesting cups.

On the IMMULITE 2000 XPi system, you can pipette a small sample into an approved tube top cup, place the cup inside the primary sample tube, and put it in a sample rack on the system. To use tube top sample cups, you must load them into a tube top rack designed for that purpose.

The tube top rack has a capacity of 14 tubes. You can only load 8 shorter tubes (75 mm) in the front row and 6 taller tubes (100 mm) in the back row.

To pipette low volume samples, use an approved 1 mL or 2 mL tube top sample cup. The sample volume required in a tube top sample cup varies depending on the assays. Refer to the IFU.

Note Schedule no more than 5 tests to pipette from a single tube top cup. The dead volume for a tube top sample cup is 75–100 µL. For large sample volume assays of 75 µL or more, the dead volume may be toward the upper end of the 75–100 µL.

Approved Cup Sizes*	For Use with this Tube Diameter
1 mL (tube top sample cup)	12 mm and 13 mm
2 mL (tube top sample cup)	16 mm
* Refer to Appendix D, *Supplies* for approved Tube Top Sampling Cup part numbers.	

To use tube top sample cups, perform the following steps:

1. Pipette the sample from the barcoded primary tube into the tube top sample cup and place it inside the primary tube.

Figure 2-6: Tube Top Sample Cup and Primary Tube

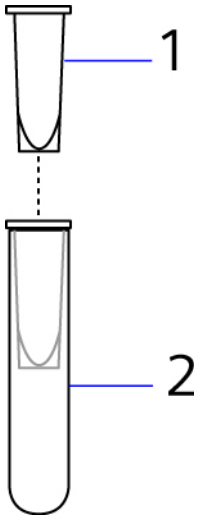

1. Tube top sample cup
2. Primary tube

CAUTION

Do not use a regular sample rack for loading tube top sample cups. Using a regular sample rack could cause damage to the system or report incorrect results. Use only the racks dedicated for tube top sample cups. These racks use a lowercase alpha character on the rack barcode label.

2. Ensure you are using a dedicated tube top sample rack.

   Tube top sample racks have a tube top rack identifier and a conductive surface on the pylons between tubes. This allows the system to perform level sensing on the tube top cups.

Tube top sample racks and standard sample racks are different. See *Figure 2-7*:

- Tube top sample racks have a lowercase letter on the barcode.
- Standard sample racks have no pylons between the tube holders.
- Standard sample racks have an uppercase letter on the barcode.

Figure 2-7: Tube Top Sample Rack and Standard Sample Rack

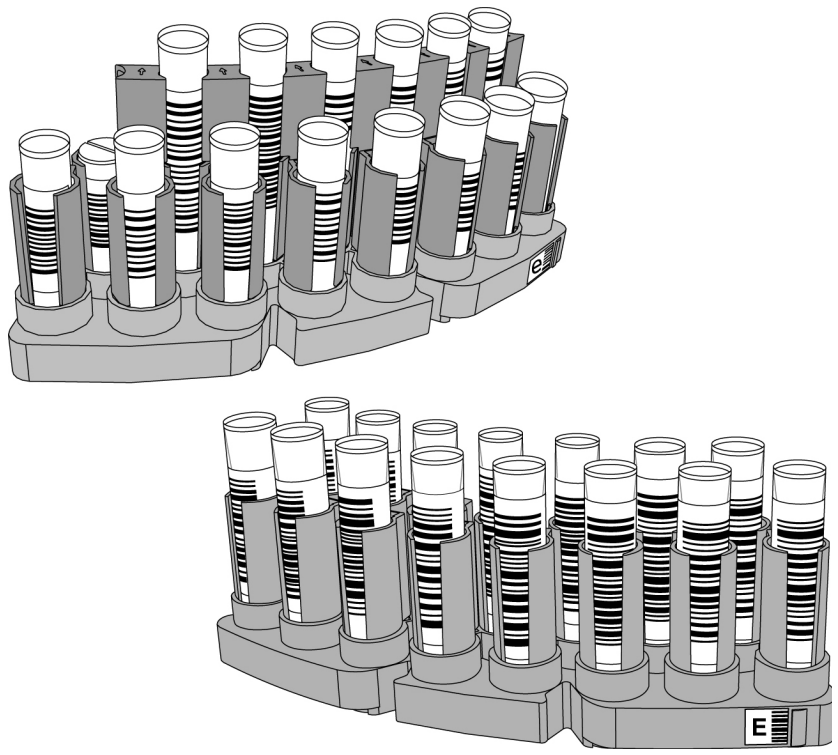

3. Load the barcoded primary tube containing the tube top sample cup into the tube top sample rack.
   - Load only 75-mm tubes in the front row of the sample rack.
   - Load only 100-mm tubes in the back row of the sample rack.

   Note Use a tube top sample rack for tube top cups only. Do not use primary or secondary tubes without a nesting cup.

- As with regular tubes, ensure the barcode is clear of any obstruction.

Figure 2-8: IMMULITE 2000 XPi Tube Top Sample Rack

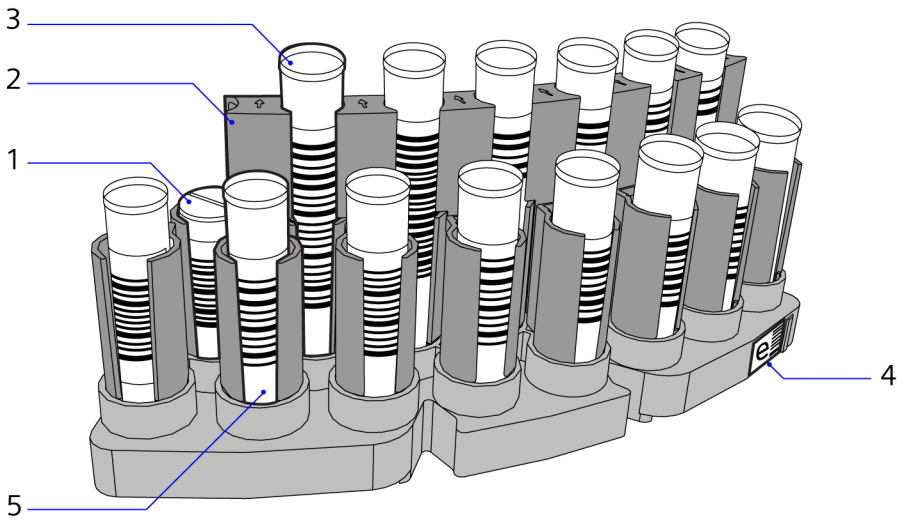

1. Tube top rack identifier
2. Conductive pylon
3. 100-mm tubes with tube top sample cups
4. Tube top rack barcode displaying a lowercase letter
5. 75-mm tubes with tube top sample cups

The system reads the sample rack barcode and tube top rack identifier. You can view the status and sample rack position on the Sample Tubes In Rack screen.

Automated Test Process

After selecting **RUN**, the system begins testing. During the test process, the system does the following:

- Drops a single assay-specific bead into a reaction tube.
- Pipettes sample, assay-specific reagent, and water onto the bead.
- Moves the reaction tube into the incubation area, where the tube is agitated at 37°C.
- Washes the reaction tube.
- Adds substrate, and the chemiluminescent reaction generates light.
- Measures the amount of light generated, and calculates and prints the test results.

Operating Modes

The IMMULITE 2000 systems operate in the following modes:

- RUN
- PAUSE
- STOP

In addition to those listed above, the IMMULITE 2000 XPi system operates in the following mode:

- AutoStart

RUN Mode

Assays are in progress and the system is operating.

PAUSE Mode

Pipettors stop and processing of any new tests temporarily halts. However, tests already on the system continue processing. Four PAUSE modes are available:

- All Pause

  Stops all loading and pipetting operations, as well as bead and reagent dispense. The assays in progress continue to process, but the system does not pipette new samples.

- Reagent Pause

  Stops the reagent carousel, reagent DRD, and reagent pipettor so no new reagent is dispensed. Other parts of the system continue processing assays.

- Bead Pause

  Stops the bead carousel, so no new beads are dispensed. Other parts of the system continue processing assays.

- Sample Pause

  Pauses the sample carousel, sample DRD, and sample pipettor. The system does not process new samples. Other parts of the system continue processing assays. Sample Pause may be delayed up to 36 seconds while currently active samples finish processing.

  Note You do not need to put the IMMULITE 2000 XPi system into PAUSE mode when loading samples.

Note Reagent Pause, Bead Pause, and All Pause modes each display messages when sequential or pretreatment assays are running. The messages display to let you know when it is safe to pause the system to prevent sequential and pretreatment tests from being lost.

STOP Mode

All mechanical movements stop, and no new tests process. When **STOP** is selected, current tests in progress are lost.

If the IMMULITE is not connected to a VersaCell system, the IMMULITE automatically initiates STOP mode when no new samples have been processed in the last 20 minutes.

IMMULITE 2000 XPi System AutoStart Mode

Routine maintenance tasks start automatically. For more information, refer to *AutoStart Maintenance (IMMULITE 2000 XPi System)*, page 5-1.

Maintaining Reagent Wedges and Bead Packs

Onboard Stability of Kit Components

Kit components can remain on the system until they are empty or expired. Kit components should not be used after the expiration date printed on the kit label. Onboard stability of reagent wedges and bead packs is 90 days after being loaded on the system.

Checking the Status of Reagent Wedges

To check the status of reagent wedges, perform the following steps:

1. If the Home screen is not displayed, select **HOME** to display it.
2. Select the **REAGENTS** carousel.

   The Reagents screen displays.
3. Using the information in the Reagents screen, determine which wedges on the Reagent Carousel need to be replaced. See *Reagents Screen* below.
4. If no wedges need to be replaced, proceed to *Checking the Status of Bead Packs*, page 2-18.

Reagents Screen

The Reagents screen displays the status of all reagent wedges on the reagent carousel. The information displayed in the Reagents screen includes:

- Reagent wedge test codes
- Reagent wedge lot numbers
- Error messages

- Adjustment status (See *Background Color*.)
- Number of tests remaining in each compartment of a reagent wedge
- Wedge positions on the reagent carousel
- Current kit deactivation status

Wedges display alphanumerically by test code, not by their positions on the reagent carousel. Each of the 24 squares on the Reagents screen represent a wedge on the reagent carousel.

Background Color

On the Reagents screen, the color of each square indicates the status of a wedge. For allergen wedge squares, see *Background color*, page 9-8.

The following table contains a list of the background colors and the status associated with each color:

Background Color	Status
White	No errors
Diagonal lines	Deactivated kit
Gray	Empty position on the Reagent Carousel
Light brown	An error condition exists. Example errors include: • The reagent wedge has a few tests remaining. • The adjustment is overdue for this kit. • Kit is expired.
Red	An error condition exists that requires immediate attention. Example errors include: • The kit barcode was not entered on the system. • The reagent wedge is empty. • A matching bead pack is not onboard the system. • The kit was never adjusted.

Error Messages

If an error occurs for a reagent, it displays in the square for the wedge in the Reagents screen:

- A plus (+) sign at the right of the error message indicates that a second error is associated with that wedge.

- Two plus (++) signs indicate that 2 or more additional errors exist for that wedge.

  You can view details about a wedge in the Reagent Detail window. See *Viewing Wedge Detail*.

The following table contains some examples of errors and how they display in the Reagents screen:

Error Message	Examples
Kit Expired +	The kit is expired, and either the reagent wedge or bead pack has expired, or an adjustment is due.
Kit Expired + +	The kit has expired, and both the reagent wedge and bead pack have expired.
Adjustment Due +	An adjustment is due, and the number of tests remaining is low.

Viewing Wedge Detail

You can view all details for a wedge using the Reagent Detail window. The information in this window includes a list of errors that have occurred for the wedge.

To open the Reagent Detail window, perform the following steps:

1. Select **HOME**.
2. Select the **REAGENTS** carousel.

   The Reagents screen displays.
3. If the system is in PAUSE or STOP mode, select **ROTATE**.

   The button changes to **REVIEW**.
4. Select the square corresponding to the reagent wedge to view.

   The Reagent Detail window displays.
5. Select **Close** to close the window.

Replacing Reagent Wedges

WARNING

Handle reagent and allergen wedges carefully to avoid agitation that might introduce bubbles. Bubbles in the reagent and allergen wedges can potentially cause incorrect results. Prior to processing samples, carefully inspect the wedges to ensure all bubbles are eliminated. Remove the reagent carousel with care. Improper handling of the reagent carousel can introduce bubbles in the reagent wedge.

To replace a reagent wedge, perform the following steps:

1. Open the reagent access panel on the top cover, then open the small reagent carousel lid.
2. Depending on the type of assays in progress, one of the following messages may display:

   ```
   Sample pre-treatment assay detected on board. If
   you put the instrument in pause mode you will need
   to close all doors and press RUN in x minutes and xx
   seconds. Would you like to put the instrument in
   pause now?
   [Yes]  [No]
   ```

   ```
   Sequential assay detected on board. If you put the
   instrument in pause mode you will need to close all
   doors and press RUN in x minutes and xx seconds.
   Would you like to put the instrument in pause now?
   [Yes]  [No]
   ```

3. To continue, select **Yes**.

   The system enters Reagent PAUSE Mode, and the Reagents screen displays.

4. Select the square for the reagent wedge to replace.

   The reagent carousel rotates so that the selected wedge is in front of the silver arrow.

5. Remove the wedge by lifting the narrow end of the wedge near the center of the carousel, tilting the wedge back on its opposite end.
6. Slide the wedge toward the center of the carousel until the slot clears the tab on the carousel.

   The wedge should lift out easily.

7. Inspect the new reagent wedge for bubbles.

8. If you observe bubbles, remove the bubbles prior to placing the system into run.
9. Place the new wedge between the carousel dividers with the barcode facing *out*.

Figure 2-9: Loading a Reagent Wedge

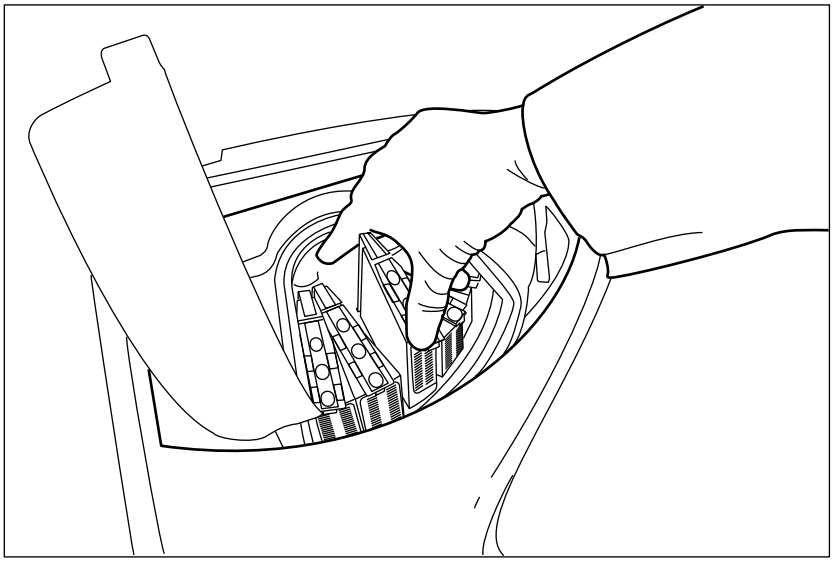

Tilt the side of the wedge with the barcode label down so the tab on the reagent carousel locks into the wedge slot under the barcode label.

Figure 2-10: IMMULITE Reagent Wedge

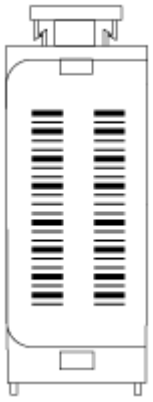

10. Press down on the narrow side of the wedge to lock it into place.
11. Push the glide of the wedge toward the center of the carousel to ensure that it moves freely.

Check for Moisture at the Top of the Wedge

To check for moisture at the top of the wedge, move the glide and inspect the top of the wedge. If moisture is present at the top of a reagent wedge, perform the following steps:

1. Remove the wedge.
2. Carefully remove the glide.
3. Dry the glide and the areas surrounding it where the probe enters the wedge.
4. Replace the glide and re-load the wedge.
5. Close the small reagent carousel lid.
6. Apply pressure until it clicks into place.
7. Close the reagent access panel on the top cover.
8. Select **RUN** to update the Reagents screen.

   Note If the kit barcode for a loaded reagent wedge was not entered, an error message displays in the Reagents screen.
9. Select **Close** to close the Reagents screen and return to the Home screen.

Checking the Status of Bead Packs

To check the status of bead packs, perform the following steps:

1. If the Home screen is not displayed, select **HOME** to display it.
2. Select the BEADS carousel.
3. Determine which bead packs on the bead carousel need to be replaced using the information in the Beads screen.

Using the Beads Screen

The Beads screen displays the status of all bead packs on the bead carousel. The information displayed in the Beads screen includes:

- Bead pack names
- Bead pack lot numbers
- Error messages
- Number of tests remaining in bead packs
- Bead pack positions on the bead carousel
- Current kit deactivation status

Bead packs display alphanumerically by test code, not by their positions on the bead carousel. Squares in the Beads screen represent each bead pack on the bead carousel.

Background Color

The color of its square in the Beads screen indicates the status of a bead pack. The following table contains a list of the background colors and the status associated with each color.

Background Color	Status
White	No errors
Diagonal lines	Deactivated kit
Gray	Empty position on the bead carousel
Light Brown	An error condition exists. Example errors include: • the bead pack has a few tests remaining • the adjustment is overdue for this kit • Kit is expired
Red	An error condition exists that requires immediate attention. Example errors include: • the kit barcode was not entered on the system • the bead pack is empty • a matching reagent wedge is not onboard the system • the kit was never adjusted

Error Messages

If an error occurs for a bead pack, it displays in the square for the bead pack in the Beads screen.

- A plus (+) sign at the right of the error message indicates that a second error is associated with that bead pack.
- Two plus (++) signs indicate that 2 or more additional errors exist for that bead pack.

Details about a bead pack can be viewed in the Bead Detail window, see *Viewing Bead Pack Detail*, page 2-20.

The following table contains some examples of errors and how they display in the Beads screen:

Error Message	Explanation
Kit Expired +	The Kit is expired and either the reagent wedge or bead pack is expired or an adjustment is due.
Kit Expired + +	The kit is expired and both the reagent wedge and bead pack are expired.
Adjustment Due +	An adjustment is due and the number of tests remaining is low.

Viewing Bead Pack Detail

You can view all details for a bead pack in the Bead Detail window. The information in this window includes a list of any errors that have occurred for the bead pack.

To open the Bead Detail window, perform the following steps:

1. Select **HOME**.
2. Select the **BEADS** carousel.

   The Beads screen displays.
3. If the system is in PAUSE or STOP mode, select **ROTATE**.

   The button changes to **REVIEW**.
4. Select the square corresponding to the bead pack to be viewed. The Bead Detail window displays.
5. Select **CLOSE**.

Replacing Bead Packs

To replace a bead pack, perform the following steps:

1. Open the bead carousel lid.
2. Depending on the type of assays in progress, one of the following messages displays:

   ```
   Sample pre-treatment assay detected on board. If
   you put the instrument in pause mode you will need
   to close all doors and press RUN in x minutes and xx
   seconds. Would you like to put the instrument in
   pause now?
   [Yes]  [No]
   ```

```
Sequential assay detected on board. If you put the
instrument in pause mode you will need to close all
doors and press RUN in x minutes and xx seconds.
Would you like to put the instrument in pause now?
[Yes]  [No]
```

3. To continue, select **Yes**.

   The system enters BEAD PAUSE mode, and the Beads screen displays.

4. Select the square for the bead pack to be replaced. The bead carousel rotates so that the selected bead pack is in front of the black arrow.

5. Remove the bead pack to be replaced.

   a. Lift the barcoded edge of the bead pack and tilt it toward the center of the bead carousel.

   b. Slide the bead pack away from the center of the carousel until the bead pack plunger clears the opening at the center of the carousel. The bead pack should lift out easily.

6. Load the new bead pack:

   a. Place the bead pack between the carousel dividers with the barcode facing out.

   b. Tilt the side of the bead pack opposite the barcode label down and insert the plunger into the opening at the center of the carousel.

c. Snap the barcoded side of the bead pack into position on the carousel. Be sure it is locked in place.

Figure 2-11: Loading the Bead Pack

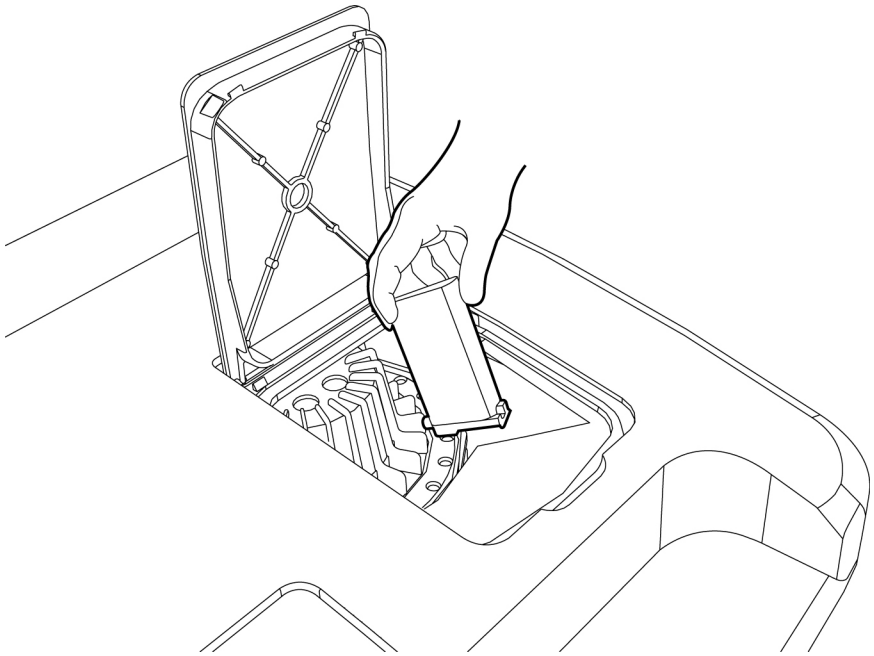

7. Close the bead carousel lid.
8. To update the Beads screen, select **RUN**:
   - If the kit barcode for the loaded bead pack has not been entered, an error message displays in the Beads screen.

     Refer to *Entering a Kit*, page 2-26.
   - Kit components can remain on the system until they are empty or expired. Kit components should not be used after the expiration date printed on the kit label.

   Note Kit components expire 90 days after loading on the system.
9. To close the Beads screen and return to the Home screen, select **Close**.

Managing Kits

IMMULITE 2000 XPi Kit Load Report

The Kit Load Report feature of the IMMULITE 2000 XPi helps the operator prepare for the anticipated day's workload by generating a list of tests needed based on current system inventory and historical assay consumption. The report provides the estimated daily average of assays processed over a selected period and a list of the recommended number of tests needed to meet the average workload.

Viewing the Kit Load Report

To generate a Kit Load Report for viewing, perform the following steps:

1. On the tool bar, select **REPORTS**.

   The Reports window displays.

2. On the Reports window, select **KIT LOAD REPORT**.

   The Kit Load Report screen displays.

   Note The default period is the selection made when the report was last generated. The default period for initial entry into the report is 4 weeks. The maximum period is 8 weeks.

3. To change the default number of weeks, select the number of weeks and week or day of the week from the drop-down lists next to **Display average use from last:**

   Example:

   To report the average usage for the last 6 Tuesdays, select 6 from the left drop-down list and Tuesday from the right drop-down list.

4. Select the type of information to display from the following buttons:

Buttons	Description
Immunoassay	Generate report details for immunoassay activity for a selected period. If immunoassay activity occurs during the period being reported, Immunoassay is the default selection.
Allergy	Generate report details for allergy activity for a selected period. If no immunoassay activity occurs during the period being reported, Allergy is the default selection.

5. Select **Refresh**.

Note The system does not automatically refresh the Kit Load Report details. A box in the upper right corner of the screen displays the date and time the report data was last refreshed.

6. To change the sort order, select the appropriate column header.

Kit Load Report Data

The following are the data fields on the Kit Load report:

Column	Data Description
Assay	A list of Assays tested during the period selected.
Average Use	The average daily number of tests run per assay for the selected period.
Processed Today	The number of tests per assay that have been used during the current day. This number includes tests with a status of Resulted, On Hold (waiting for current adjustment to complete), In Progress, and in Queue. Waiting records are not included.
Tests Onboard	The number of tests per assay that remain in the kits currently onboard.
Load Estimate	The estimated number of tests needed to run the current day's workload calculated according to the following formula: Load Estimate = Average Use - (Processed Today + Tests Onboard); the value is 0 if there are sufficient kit components onboard.

Note The report's default sort order is by Load Estimate, descending quantities.

Printing the Kit Load Report

To print the Kit Load Report, perform the following steps:

1. On the Kit Load Report screen, select **Refresh**.

   Note Printing does not refresh the Kit Load Report.

2. On the Kit Load Report screen, select **Print**.

   The print configuration window displays.

3. In the ASSAY TYPE box, select one of the following options:

ASSAY TYPE	Description
Immunoassay	Include only a list of immunoassay kits recommended to load.
Allergy	Include only a list of allergy kits recommended to load.
All Assays	Include a list of all kits recommended to load. All Assays is the default selection.

4. In the REPORT DATA box, select one of the following options:

REPORT DATA	Description
Exceptions Only	Limit the printed report to only those immunoassay or allergy tests that are estimated to need more kit components. Exceptions Only is the default selection.
All	Print a report of all immunoassay and/or allergy tests displayed in the Kit Load Report screen.

5. To print the report, select **Print Report**.

   The system prints the report, and the print configuration window closes.

Reviewing the Printed Report

The report header details are:

- Instrument ID.
- Instrument Name.
- The date and time the report was last refreshed.
- The period the usage was averaged over (Display average use from last).
- The type of data (Immunoassay or Allergy).

The printed report data is sorted by the same criteria, and in the same order as the Kit Load Report screen data:

Data	Description
Assay	A list of Assays tested during the period selected. If the Assay name is followed by an asterisk (*), the assay requires diluent onboard to run.
Kit Lot	Commas separate the Kit Lots for each assay onboard. **Note** If no kits are onboard for this assay, the Kit Lot list is empty.
Average Use	The average daily number of tests run per assay for the selected period.
Processed Today	The number of tests per assay that have been used during the current day. This number includes tests with a status of Resulted, On Hold (waiting for current adjustment to complete), In Progress, and in Queue. Waiting records are not included.
Tests Onboard	The number of tests per assay that remain in the kits currently onboard.
Load Estimate	The estimated number of tests needed to run the current day's workload calculated according to the following formula: Load Estimate = Average Use - (Processed Today + Tests Onboard); the value is 0 if there are sufficient kit components onboard.

Entering a Kit

Before loading reagents onto the system, scan the kit lot barcode using the handheld scanner. After a kit is scanned, existing kit information can be reviewed. See *Reviewing Kit Information*, page 2-28.

For Immunoassay Kits

Scan the 2D barcode located on the inner flap of the kit box. See *Scanning a 2D Kit Barcode Using a 2D Scanner*, page 2-27.

For Allergy Kits

For allergy kits, see *Loading Allergens and Allergen Wedges*, page 9-4.

Note Before using a new assay or new kit lot, adjustments must be run. For instructions, see *Adjusting an Assay*, page 2-32. If the new kit is not adjusted, the system flags patient results with ADJ. See *Flags Associated with Results*, page H-4.

Operational Notes

The following is advice for scanning kits:

- If 3 different kit lots for the same assay are in the database and a fourth kit lot for that assay is scanned, a prompt displays to select which existing kit lot to delete.
- If a kit lot that is already in the system is re-scanned, a prompt displays asking if the active kit information should be overwritten with the new kit information. If you select **Overwrite**, the slope and intercept for the kit being overwritten reverts back to the slope and intercept of the Master Curve.

Scanning a 2D Kit Barcode Using a 2D Scanner

To scan a 2D kit barcode using a 2D scanner, perform the following steps:

1. Hold the scanner 5–7 cm (2–3 inches) away from the 2D barcode.
2. Keep the angled face of the scanner parallel to the barcode.
3. Press and hold the trigger button on the scanner.

   An orange beam displays.
4. Begin scanning in the white area above the 2D barcode.
5. Move the scanner at an even rate over the entire barcode.

   A clicking noise during scanning indicates that the barcode is being read. A high-pitched tone sounds when the scan is successful. If the scan was not successful, a low-pitched tone may sound. Rescan the barcode until a high-pitched tone is heard.

   The Kits screen displays information about the kit.

Scanning a 2D Kit Barcode Using an Imaging Scanner

To scan a 2D kit barcode using an imaging scanner, perform the following steps:

1. Hold the scanner 13–18 cm (5–7 inches) away from the 2D barcode.
2. Keep the angled face of the scanner parallel to the barcode.
3. Press and hold the trigger button on the scanner and point the scanner beam at the center of the barcode.

4. Scan at the center of the barcode.

   Note Do not move the scanner over the entire barcode as you would with a 2D scanner.

5. Hold the trigger button until a tone sounds to indicate that the barcode was read successfully.

   The Kits screen displays information about the kit.

Reviewing Kit Information

To review existing kit information, perform the following steps:

1. At the toolbar, select **KITS**.
2. To toggle back and forth between kit and allergen information, select **Kits** or **Allergen**.
3. To view information for the kits currently entered in the system, select one of the following options:
   - Select **Previous Kit** or **Next Kit**.
   - To open the find window, select **Find**, then:

     For allergen kits, enter the test code (located on the allergen vial's 2D barcode label) and the kit lot number, then select **Find Kit**.

     For immunoassay kits, enter the test code (located in the IFU or on the kit box) and the kit lot number, then select **Find Kit**.

   Note The kit can also be found by entering just the test code.

The following table explains each field in the Kits screen:

Field	Explanation
Allergens / Kits button	Displays information about allergens in the database. The button toggles to Kits. For more information about allergy kits see *Allergy Kits Overview*, page 9-1. Select **Kits** to display information about assay kits in the database. The button toggles to Allergens.
Find button	Use to enter a test code and lot number to display information about a particular assay.
Kit Deactivation button	Displays Kit Deactivation screen.

Field	Explanation
Previous Kit/Next Kit buttons	Displays information for the previous kit or next kit in the database. Kit information in the database is displayed for one kit at a time, in alphanumerical order by test code.
Test Code	Displays code used to indicate a specific assay.
Kit Lot	Displays kit lot number.
Bead Lot	Displays bead lot number of the kit.
Reagent Lot	Displays reagent lot number of the kit.
Low Adjustor Lot	Displays lot number of the low adjustor.
Low Adjustor CPS	Displays the master curve CPS for the low adjustor.
High Adjustor Lot	Displays lot number of the high adjustor.
High Adjustor CPS	Displays the master curve CPS for the high adjustor.
Adjustor Allergen Lot	Displays lot number of the Adjustor Allergen Lot. This field is inactive for immunoassay kits.
Control Allergen Lot	Displays lot number for the kit's control antibody. This field is inactive for immunoassay kits.
Last Adjustment	Displays date of the last adjustment.
Next Adjustment	Displays date a re-adjustment is due.
Adjustment Status	Current kit adjustment status: • Over Due – the kit adjustment is overdue. • Adjusted – the kit is adjusted. • Not Adjusted – the kit barcode was scanned but the kit was not adjusted.

Field	Explanation
Kit Status	Current kit status: • Expired – the kit is expired. • Valid – the kit has been adjusted and is not expired. • New Kit – the kit barcode has been scanned but the kit has not been adjusted.
Diluent	Displays name of the diluent used by the kit.
Kit Expiration	Displays kit expiration date.
Slope	Displays slope calculated for the last adjustment.
Intercept	Displays intercept calculated for the last adjustment.
Slope Limits	Displays kit-specific slope ranges used to determine if an adjustment was successful. Scanning the 2D kit barcode enters kit-specific slope ranges into the database. This field may display in gray when viewing information about immunoglobulin kits.
Sample Volume µl	Displays amount of sample needed for the test to run.
Parameter 1, Parameter 2, Parameter 3, Parameter 4	Display values used together to define the master curve for this kit lot.

Configuring Kit Lot Deactivation

To deactivate or activate a kit lot, perform the following steps:

Note Any tests in progress or in queue continue to run and result as usual after a kit lot is deactivated.

1. On the tool bar, select **KITS**.

   The Kits screen displays.

   Note Use Previous Kit, Next Kit, or Find to locate a particular kit lot.

2. Select **Kit Deactivation**.

   The Kit Lot Deactivation screen displays.

3. From the drop-down list, select an assay for which you want to activate/deactivate kit lots.

   The following table describes the kit lot column headers:

Option	Description
Active for All Samples:	Can process all orders with this kit lot.
Deactivated Patient Samples:	Can process only adjustor, control, and verifier orders with this kit lot.
Deactivated for All Samples:	Cannot process orders with this kit lot.

4. To deactivate a single kit lot for the selected assay, select its option box in the grid under the headers **Deactivated Patient Samples** or **Deactivated for All Samples**.

   A check mark displays in the box indicating the kit's current status.

   Note Alternatively, to activate a single kit lot for the selected assay, select its option box in the grid under the header **Active for All Samples**.

5. To deactivate all kit lots for the selected assay, select the header **Deactivated Patient Samples** or **Deactivated for All Samples**.

   Check marks display for each kit lot in the column.

   Note Alternatively, to activate all kit lots for the selected assay, select the header **Active for All Samples**.

   Note In integrated mode, if kits are either deactivated for patient samples or all samples, “No Inventory” is displayed for that assay on the VersaCell system.

   Note The kit lot is added or removed from the list of Currently Deactivated Kits after selecting **SAVE**.

6. To accept the changes, select **SAVE**; or to ignore them, select **CANCEL**.
7. To configure additional kit lots, select a different assay from the drop-down box next to the “For this TEST:” heading and repeat this procedure.
8. To exit the Kit Lot Deactivation screen, select **CLOSE**.

To access the Kit Deactivation screen from other screens, do one of the following:

- On the Reagent detail window, select **Kit Deactivation**.

  The Kit Deactivation screen displays.

- On the Beads detail window, select **Kit Deactivation**.

  The Kit Deactivation screen displays.

Kit Deactivation Status

When a kit lot is deactivated, indicators display as follows:

Screen / Window	Description
KITS	If a kit lot is deactivated, the deactivation status displays in the upper right corner of the KITS screen.
Reagents	Diagonal lines indicate the kit lot is deactivated. Select a wedge for more information.
Beads	Diagonal lines indicate the kit lot is deactivated. Select bead pack for more information.
Reagent Detail	The deactivation status displays in the Current Deactivation Status box. If necessary, select **Kit Deactivation** to change the kit's deactivation status. For more information, see *Configuring Kit Lot Deactivation*.
Bead Detail	The deactivation status displays in the Current Deactivation Status box. If necessary, select **Kit Deactivation** to change the kit's deactivation status. For more information, *Configuring Kit Lot Deactivation*.
Consumables Report	The status of a deactivated kit displays on the Consumables Report window.
Worklist Display/Edit	Deactivated displays in the Status column when an order cannot run if a kit lot is deactivated.
Sample Tubes in Racks	Samples with orders associated with deactivated kits are coded KIT ERROR/DEACTIVATED.
Rack Detail	In the textbox, Deactivated displays next to the test code when an order cannot run due to kit deactivation.

Adjusting an Assay

Before using a new kit lot, you must run an adjustment. This initial adjustment corrects for any variations in performance between your system and the manufacturer's system.

Kits must be re-adjusted periodically. The adjustment schedule for a kit is indicated in the kit's Instructions For Use (IFU). The Reagent and Beads screens indicate if an adjustment is due. Refer to *Checking the Status of Reagent Wedges*, page 2-13 and *Checking the Status of Bead Packs*, page 2-18.

Loading an Adjustor

To load an adjustor, perform the following steps:

1. Remove the adjustor barcode labels from the kit.

Figure 2-12: Examples of Adjustor barcode Labels



1. ADJUSTOR L (low adjustor)
2. ADJUSTOR H (high adjustor)
3. Single Adjustor

2. Place a barcode label for an ADJUSTOR L (low adjustor) on one tube and a barcode label for an ADJUSTOR H (high adjustor) on another tube. See *Figure 2-12*.

   Note When a kit contains a single adjustor, the barcode label is ADJUSTOR. See *Figure 2-12*.

3. Remove the adjustor bottles from the kit.

4. If necessary, reconstitute the adjustor.
5. Transfer each adjustor to the corresponding tube.
6. Load the adjustor tubes on the sample rack so the barcodes face out. See *Labeling and Loading Sample Tubes*, page 2-1.

Adding an Adjustor to a Worklist

Note You may not adjust an assay kit lot while the previous adjustment for the same kit lot is still running.

To add an Adjustor to the worklist, perform the appropriate steps:

- *Barcoded Adjustors*
- *Adjustors Without Barcodes*

Barcoded Adjustors

To adjust an assay, perform the following steps:

1. When the sample carousel has been interrogated completely, on the toolbar, select **WORKLIST**.

   The Worklist entry screen displays.
2. Select **ADJUSTOR**.
3. Using **Previous** or **Next,** find the record with the adjustor's lot number in the Adjustor Lot # field and 01 in the Adjustor Level field. This is for ADJUSTOR L or a single ADJUSTOR.
4. Enter the lot number of the kit you are adjusting in the Kit Lot # field.

   Note You must select **ACCEPT ADJUSTOR** for the worklist entry to be accepted. If you do not, the worklist entry is deleted.
5. Select **ACCEPT ADJUSTOR**.

   The next barcoded record displays.

If the assay you are adjusting has a single adjustor, go to step 8.

   Note If ADJUSTOR H was loaded in the position following ADJUSTOR L, the system displays the record with the adjustor's lot number in the Adjustor Lot # field and 02 in the Adjustor Level field for ADJUSTOR H.

6. Enter the lot number of the kit you are adjusting in the Kit Lot # field.
7. Select **ACCEPT ADJUSTOR**.

   The next barcoded record displays.
8. Select **Display/Edit**.

9. On the Worklist Display/Edit screen, select **UPDATE SCREEN** and use the Status column to determine the status of the samples.

Adjustors Without Barcodes

If the adjustor barcode is damaged or missing, perform the following steps:

1. Select **ADJUSTOR**.
2. Select **New**.
3. Enter the kit Lot #, Adjustor Lot #, and Adjustor Level (01 or 02).
4. Select **Assign Tube Position**.
5. Under **Select Rack To Use**, select the letter corresponding to the sample rack where the sample is located.

   Under **Select Position To Use,** a graphical depiction of the positions on the sample rack displays. Standard samples are displayed as circles, and tube top sample cups (IMMULITE 2000 XPi only) and microsamples are displayed as squares. The sample status is indicated by the color of the numbered circle or square. Refer to the key for the status associated with each color.
6. Under **Select Position To Use**, select the white circle or square where the sample is located.

   The position turns red and the rack and position display at the bottom of the window.
7. Select **OK**.

   The Worklist entry screen displays. The tube position (rack and number) displays to the right of the **Assign Tube Position** button for this sample.
8. Enter the test to run on the adjustor:
   a. Select **TESTS**.

      The Worklist Available Tests screen displays a list of available tests.
   b. Select Immunoassay **ON BOARD**.

      A button for every immunoassay onboard displays in the center of the screen.
   c. Select the button for the immunoassay to add to the worklist.

      The code for the test selected displays in the Tests Selected field, and the button for that test is highlighted.

d. When you finish selecting the test, select **OK** in the Worklist Available Tests screen to save the entries.

The selected test displays in the **Tests Ordered** field.

Note To remove a test from the **Tests Ordered** field, select the test name. The test name turns gray. To activate the test again, select the test name. The test name turns black.

Note You must select **ACCEPT ADJUSTOR** for the worklist entry to be accepted. If you do not, the worklist entry is deleted.

9. Select **ACCEPT ADJUSTOR**.

Adjustment Printout

The adjustment printout displays interpretive information to aid in the evaluation of adjustments. In addition, the adjustment printout indicates whether or not the adjustment is complete.

The following table displays information about 2 adjustor assays:

Calculation	Description
Instrument slope range	Plus or minus 20% of the average instrument slope
Average instrument slope	Average of all first successful adjustments of all kit lots of all assays, not including the current adjustment
Previous slope range	Plus or minus 10% of the previous successful adjustment for a specific kit lot
Assay average slope	Average slope of all successful adjustments for an assay.
Intercept guideline	• Sandwich assays 30% of the Low adjustor CPS from the kit barcode • Competitive assays 2% of curve parameter 1

The following table displays information about a single adjustor assay:

Feature	Description
Previous assay adjustment index	Adjustment index of the last successful adjustment
Assay average adjustment index	Average of all first successful adjustments for an assay, not including the current adjustment

Adjustment Complete

The following describes the Adjustment complete status:

- If the slope for the adjustment does not exceed the rejection limits, the Adjustment Report displays this message at the bottom of the page:

  `Adjustment Complete`

- If the CV % of the replicates of the low and high Adjustors are within the acceptable limits, the Adjustment Report displays this message:

  `Adjustment Complete`

- For any adjustment marked Adjustment Complete, review the adjustment guidelines to determine if the adjustment is valid.

Adjustment Was Not Successful

The following describes the unsuccessful Adjustment status:

- If the CV % of the replicates are outside the acceptable limits, the Adjustment Report displays this message:

  `CV of High (or Low) adjustors not within limit.`

  Both the low and high adjustors must be run again before running patient samples.

- If the slope is outside the rejection limits, the Adjustment Report displays this message:

  `Exceeded rejection limits for slope`

  The slope limit failed.

  Note The system does not process controls and patient samples on adjustments exceeding rejection limits. Re-adjust assays exceeding the adjustment rejection limits.

  Note If there has been no adjustment for the kit or a valid adjustment is overdue, the system flags the patient results with ADJ.

Refer to *Viewing the Adjustment Log*, page 2-39 for more information.

Checking Adjustment Validity

When judging adjustment validity, evaluate the control results, slope, and intercept according to the following table:

Guideline	Description
Control Results	After control ranges are established, you must run controls to verify kit adjustment before processing patient samples. If the controls are out of range: • Follow accepted laboratory protocols for investigating QC failure; correct any problems found and run the controls again. • If they are still out of range, and no other problem can be identified, re-adjust the kit. • If the problem persists, contact local technical support. Refer to *Master Curve/Two-Point Adjustment*, page 3-1 for more information on Master Curve generation and for more information on the 2-point adjustment process.
Slope	• Initial adjustment of a new kit lot: The slope should fall within the instrument slope range, meaning plus or minus 20% of the mean slope for that system. • Re-adjustment of the same kit lot: Within a kit lot, the slope calculated during re-adjustment should fall within 10% of the previous slope. Refer to *Master Curve/Two-Point Adjustment*, page 3-1.
Intercept	Check the intercept of adjustment. The absolute value of the intercept should be less than or equal to the intercept guideline. Refer to *Intercept of Adjustment for an Immunometric (Sandwich) Assay*, page 3-5 and *Intercept of Adjustment for a Competitive Assay*, page 3-6 for further information on evaluation of intercepts.

Viewing the Adjustment Log

To view the adjustment history in the adjustment log, perform the following steps:

1. On the horizontal toolbar, select **MENU**.
2. Select **Adjustment Log**.
3. On the ADJUSTMENT LOG VIEW window, select the **FROM** and **TO** dates by clicking in the **FROM** and **TO** fields, then select dates from the calendar.
4. Select **OK**.
5. From the **TEST TYPE** drop down list, select the test.
6. Select **FIND**.

   The ADJUSTMENT LOG VIEW window displays a list of adjustments, beginning with the most recent adjustment.
7. To review adjustment data, select an adjustment and select **REVIEW**.

   The Adjustment Log screen displays.
8. To print the screen, select **PRINT**.
9. Select **CLOSE**.

   The ADJUSTMENT LOG VIEW window displays.
10. Select **CLOSE**.

Managing a Worklist

A worklist specifies which tests to run for each sample. If the system is connected to an LIS, worklists for patient samples are entered automatically.

The operator uses the Worklist entry screen to do these tasks:

- Add patients to a worklist, if necessary:
  - When the system is not connected to an LIS.
  - If barcodes are damaged or missing.
- Specify tests for control and calibration verifier samples.
- Adjust assays.
- Order dilution samples (onboard and manually).
- Specify STAT samples.
- View CONSUMABLES REPORT.

Test entry options include the ability to select tests from a list of available tests or panels, assign tests to an entire sample rack, or assign a tube position, if necessary, such as when the barcode is damaged or missing.

Worklist management and display options (see *Worklist Display Options*, page 2-56) allow the operator to:

- Display a worklist
- Print a worklist
- Modify a worklist
- Delete worklist entries
- Save a worklist
- Import a previously saved worklist

Adding Controls to a Worklist

To add controls to the worklist, perform the appropriate steps:

- *Barcoded Controls*
- *Controls Without Barcodes*

Barcoded Controls

To add controls to the worklist, perform the following steps:

Note Load control samples with barcodes and select **RUN** before proceeding with the following steps.

1. On the toolbar, select **WORKLIST**.

   The Worklist entry screen displays.

2. Select **CONTROL**.

3. Select **Previous** or **Next** to locate the control record to review.

   If the barcode is damaged or missing, refer to *Controls Without Barcodes*, page 2-42.

4. To enter the tests to run on the control sample:

   a. Select **TESTS**.

      The Worklist Available Tests screen displays a list of available tests.

   b. Select Immunoassay **ON BOARD**.

      A button for every immunoassay onboard displays in the center of the screen.

c. Select the button for each immunoassay to add to the worklist.

   The codes for the tests selected display in the Tests Selected field, and the button for that test is highlighted.

d. Specify replicates of the tests added to the worklist.

   Proceed to step i if replicates are not needed.

e. Select a test in the Tests Selected field, then select **REPLICATES**.

   The Replicates window displays.

f. Enter the number of replicates to perform using the keyboard.

g. Select **OK** to enter this number.

   The Replicates window closes.

h. Repeat steps e through g for all tests that require replicates.

i. When finished selecting tests, select **OK** in the Worklist Available Tests screen to save the entries.

The selected tests display in the **Tests Ordered** field.

Note To remove a test from the **Tests Ordered** field, select the test name. The test name turns gray. To activate the test again, select the test name. The test name turns black.

5. If more than one kit lot for an assay is onboard the system, enter the kit lot number in the **Kit Lot #** field to run the control for a particular lot of that assay.

   Note You must select **ACCEPT CONTROL** for the worklist entry to be accepted. If you do not, the worklist entry is deleted.

6. Select **ACCEPT CONTROL**.

   Information about the next barcoded sample on the sample carousel displays in the Worklist entry screen. If the other samples on the sample carousel have no barcodes, the fields in the Worklist entry screen are cleared.

7. Select **Display/Edit**.

   The Worklist Display/Edit screen displays.

8. Select **UPDATE SCREEN** and verify that the controls added display in the worklist.

Controls Without Barcodes

Note For an IMMULITE 2000 system, manually assigned tubes need to be identified each time the sample carousel is paused and re-interrogated. For an IMMULITE 2000 XPi system, manually assigned tubes need to be identified if the sample rack was ejected and reloaded.

Note Before proceeding, load the samples and select **RUN**.

To add a control to the worklist when the barcode is missing or damaged, perform the following steps:

1. Select **WORKLIST**.

   A blank Worklist entry screen displays.

2. If Control is not already highlighted, select **CONTROL**.

3. Enter the accession number for the particular level of control into the **Accession #** field.

   This accession number is the same number that was assigned to a particular level of control when the control information was entered into the system.

   To retrieve this number, perform the following steps:

   a. On the Horizontal toolbar, select **QC**, then select **Data Entry**.

   b. Use **Previous Control** or **Next Control** to locate the control information.

   c. Copy the accession number that corresponds to the particular level of control, and paste it into the **Accession #** field of the Worklist entry screen.

      Alternatively, make a note of the accession number and enter it into the Worklist entry screen.

4. On the keyboard, select **Enter**.

   The control name, lot number, and level display on the screen.

5. Select **TESTS**, then order the appropriate tests.

6. Select **Assign Tube Position**.

   The ASSIGN TUBE POSITION window displays.

   a. Under **Select Rack To Use**, select the letter corresponding to the sample rack where the sample is located.

      Under **Select Position To Use,** a graphical depiction of the positions on the sample rack displays. Standard samples are displayed as circles, and tube top sample cups (IMMULITE 2000 XPi only) and microsamples are displayed as squares. The sample status is indicated by the color of the numbered circle or square. Refer to the key for the status associated with each color.

   b. Under **Select Position To Use**, select a white circle or square on the sample rack.

      The position turns red and the tube position (Rack and Position) displays at the bottom left on the window.

   c. Select **OK**.

      The Worklist entry screen displays. The tube position (rack and number) displays to the right of the **Assign Tube Position** button for this sample.

   Note You must select **ACCEPT CONTROL** for the worklist entry to be accepted. If you do not, the worklist entry is deleted.

7. Select **ACCEPT CONTROL**.

8. To add an additional level of control, select **New** and repeat steps 3 through 7 for each level of control.

Adding Patients to a Worklist

If a sample barcode is damaged or missing, or the system is not connected to an LIS, you must add patients to the worklist manually. When no LIS connection is available and samples are barcoded, follow the instructions in *Barcoded Patient Samples*, page 2-44. If a sample barcode is damaged or missing, refer to *Damaged or Missing Patient Barcodes*, page 2-46.

The system displays a Duplicate Accession Number message to advise you if multiple patient sample tubes with the same accession number are present on the sample carousel. You can use duplicate accession numbers for controls, verifiers, and adjustors.

If the system detects two or more patient sample tubes with the same barcoded accession number on the sample carousel, the following message displays:

```
Duplicate accession numbers found on the Sample
Carousel.
Accession # XXXX Rack C Position 1
Accession # XXXX Rack F Position 11
Duplicate Patient Sample Tubes were Marked Bad
```

All of the duplicate patient tubes are marked with a Duplicate Tube error, and the system will not pipette the tests ordered until only one tube is on the carousel.

Note Tests ordered by the LIS or imported through the worklist remain, and are processed as soon as the duplicate tube is removed.

Note If the same accession number is present on both the IMMULITE and VersaCell systems, only the tube on the IMMULITE system is pipetted.

Barcoded Patient Samples

To add patients to the worklist when the system is not connected to an LIS, perform the following steps:

Note Before proceeding, load the samples and select **RUN**.

1. Select **WORKLIST**.

   The Worklist entry screen displays.

2. Select **Previous** or **Next** to locate the patient accession number to add to the worklist.

   Note If the tube has a damaged barcode, the accession number will not display. See *Damaged or Missing Patient Barcodes*, page 2-46.

3. If applicable, enter the patient's name, ID number, and birth date, and the physician's name in the proper fields.

4. To enter the tests to run on the patient sample, perform the following steps:

   a. Select **TESTS**.

      The Worklist Available Tests screen displays a list of available tests.

   b. Select Immunoassay **ON BOARD**.

      A button for every immunoassay onboard displays in the center of the screen.

c. Select the button for each immunoassay to add to the worklist.

   The codes for the tests selected display in the Tests Selected field, and the button for each test is highlighted.

d. Specify replicates of the tests added to the worklist.

   Proceed to step i if replicates are not needed.

e. Select a test in the Tests Selected field, then select **REPLICATES**.

   The Replicates window displays.

f. Enter the number of replicates to perform using the keyboard.

g. Select **OK** to enter this number.

   The Replicates window closes.

h. Repeat steps e through g for all tests that require replicates.

i. When finished selecting tests, select **OK** in the Worklist Available Tests screen to save the entries.

The selected tests display in the **Tests Ordered** field.

Note To remove a test from the **Tests Ordered** field, select the test name. The test name turns gray. To activate the test again, select the test name. The test name turns black.

5. To order dilutions, see *Diluting Samples*, page 2-51.
6. To order a STAT test, select **STAT**, then select the test name in the Tests Ordered field.

   The test name turns red.

   Note You must select **ACCEPT PATIENT** for the worklist entry to be accepted. If you do not, the worklist entry is deleted.

7. Select **ACCEPT PATIENT**.

   Information about the next barcoded sample on the sample carousel displays in the Worklist entry screen.

8. Repeat steps 4 through 7 until tests are assigned for each patient sample.

   Note To specify another test for a patient already added to the worklist, perform one of the following actions:

   - Select **New**, then enter the unique accession number and the new test.
   - Select **Previous** or **Next** to locate the accession number of the previous entry, then enter the new test.

- Select **Display/Edit**, select the record, select **EDIT RECORD**, then enter the new test.

Note You must select **ACCEPT PATIENT** for the worklist entry to be accepted. If you do not, the worklist entry is deleted.

9. Select **ACCEPT PATIENT**.
10. To verify that all patient samples have been added to the worklist, select **Display/Edit**.
    - In the Sort List By field, select the **Patients** selection to view patient samples first in the worklist.
    - Select **UPDATE SCREEN** to view the most current information.
    - Verify the tests added display in the worklist.

Worklist Status	Description
Time	Time remaining for the test to be completed.
Waiting	The sample is on the system, but the test has not started.
No Sample	The sample is not on the system.
In-Queue	The test is close to being processed.
Sample Error	A problem with the Sample Tube was detected, for instance insufficient sample or a clot was detected.
No Bead	No beads are available for this test.
Bead Err	A bead did not drop from the bead pack.
Reagent Err	The system was unable to pipette reagent, or the reagent is not onboard.
Allergen Err	The system was unable to pipette allergen, or the allergen is not onboard.
Diluent Err	The system was unable to pipette diluent or diluent is not onboard.

Note For multiple errors, only the highest priority error displays.

Damaged or Missing Patient Barcodes

After the system interrogates the sample carousel, the Consumables Report lists samples with damaged or missing barcodes as `no barcodes`.

To add a patient to the worklist when the barcode is missing or damaged, perform the following steps:

Note For an IMMULITE 2000 system, manually assigned tubes must be identified each time the sample carousel is paused and re-interrogated. For an IMMULITE 2000 XPi system, manually assigned tubes must be identified if the sample rack was ejected and reloaded.

1. Select **WORKLIST**.

   Note To specify the sample type, from the MANUAL ENTRY OPTIONS select **PATIENT**, **ADJUSTOR**, **CONTROL**, or **CALIB. VER.** (calibration verifier). The last option selected is automatically specified the next time the Worklist entry screen is accessed.

2. Select **PATIENT**.
3. Select **New** to clear the screen.
4. If necessary, select the **SKIP NAME** or the **SKIP DEMOGRAPHICS** options.

Select	To do
SKIP NAME	Skip the Name field
SKIP DEMOGRAPHICS	Skip the demographics fields (Patient ID, Birthdate, and Physician)

5. Enter the accession number in the **Accession #** field.
6. Select **Assign Tube Position**.
7. Under **Select Rack To Use**, select the letter corresponding to the sample rack where the sample is located.

   Under **Select Position To Use,** a graphical depiction of the positions on the sample rack displays. Standard samples are displayed as circles, and tube top sample cups (IMMULITE 2000 XPi only) and microsamples are displayed as squares. The sample status is indicated by the color of the numbered circle or square. Refer to the key for the status associated with each color.

8. Under **Select Position To Use**, select the position by clicking on the white circle or square where the sample is located.

   The position turns red and the rack and position display at the bottom of the window.

9. Select **OK**.

   The Worklist entry screen displays. The tube position (rack and number) displays to the right of the **Assign Tube Position** button for this sample.

10. If applicable, enter the patient's name, ID number, and birth date, and the physician's name in the proper fields.

Adding Tests to Samples Without Barcodes

To enter the tests to run on the patient sample, perform the following steps:

1. Select **TESTS**.

   The Worklist AVAILABLE TESTS screen displays.

2. Select the required tests.
   a. Select Immunoassay **ON BOARD**.

      A button for every immunoassay onboard displays in the center of the screen.

   b. Select the button for each immunoassay to add to the worklist.

      The codes for the tests selected display in the Tests Selected field, and the button for each test is highlighted.

      Proceed to step g if replicates are not needed.

   c. To specify replicates of the tests added to the worklist, select a test in the Tests Selected field, then select **REPLICATES**.

      The Replicates window displays.

   d. Enter the number of replicates to perform using the keyboard.

   e. Select **OK** to enter this number.

      The Replicates window closes.

   f. Repeat steps d through e for all tests that require replicates.

   g. When finished selecting tests, select **OK** in the Worklist Available Tests screen to save the entries.

   The selected tests display in the **Tests Ordered** field.

   Note To remove a test from the **Tests Ordered** field, select the test name. The test name turns gray. To activate the test again, select the test name. The test name turns black.

3. To order a STAT test, select **STAT**, then select the test name in the Tests Ordered field.

   The test name turns red, indicating this test now has a STAT priority and runs first.

   Note You must select **ACCEPT PATIENT** for the worklist entry to be accepted. If you do not, the worklist entry is deleted.

4. Select **ACCEPT PATIENT**.

Test Entry Options

When manually specifying tests, the Worklist entry screen allows you to:

- Select tests from a list of available tests.
- Select a panel from a list of available panels.
- Assign tests to an entire sample rack.

Selecting a Panel

To select a panel of tests to run for a particular sample, perform the following steps:

Note The panels are configured on the Panels screen. Refer to *Panel Configuration*, page 8-19.

1. On the Worklist entry screen, select **PANELS**.

   The Worklist Available Panels screen displays a list of available panels.

2. Select the appropriate panel name button.

   The tests included in this panel display in the Tests Ordered window in the panel color, and the panel name button highlights in the panel color.

3. Select other panel name buttons, as applicable.

   To deselect a panel, select the highlighted panel name button. The tests turn gray.

4. Select **OK**.

   The Worklist entry screen displays with the tests in the specified panel in the Tests Ordered field.

5. To update the record with the tests in the specified panel, select **ACCEPT PATIENT**, **ACCEPT CONTROL**, or **ACCEPT VERIFIER**.

Assigning Tests to an Entire Rack

It may be more convenient to assign tests to an entire sample rack than to specify tests one at a time.

Note If the system is connected to an LIS, the tests to run for each sample are automatically entered in the worklist.

To assign tests to an entire rack, perform the following steps:

1. Load the barcoded samples on the sample rack, place the rack on the system, and select **RUN**.

   Note For samples with damaged or missing barcodes, follow the steps in *Damaged or Missing Patient Barcodes*, page 2-46.

2. On the Worklist entry screen, select **Batch Tests by Rack**.

   The Batch Test By Rack window displays.

3. Select one or more of the available sample racks.

   Note To deselect a sample rack, select the rack again.

4. Perform one of the following options to select the tests to run:
   - Select **TESTS**. See *Barcoded Patient Samples*, page 2-44.
   - Select **PANELS**. See *Selecting a Panel*, page 2-49.

   The tests display in the Tests Selected window.

   Note To clear the entries from the Tests Selected window, select **CLEAR**.

5. Select a dilution to be applied to the rack:

   Note Also, see *Diluting Samples*, page 2-51.

   For onboard dilutions:

   a. Select **Dilution**.

   b. Select the assay to dilute in the Tests Selected window.

      The Dilution Factor window displays.

c. Select a dilution factor:

Dilution Factors	Sample Volume (µL)*
3X	67
5X	40
10X	20
20X	10
40X	5
100X	5

*This is the sample volume pipetted.
Additional volume is also required.

The Dilution Factor window closes, and the dilution factor displays in the Tests Selected window.

Note When a manual dilution factor is entered for a Sample Rack, the entered dilution factor will be applied to all samples in that rack.

For manual dilutions:

a. Select **Manual Dilution**.

The Manual Dilution Factor window will display.

b. Enter the dilution factor.

c. Select **OK**.

All samples on the rack must be diluted by the operator prior to loading onto the system.

Note For a combined onboard and manual dilution, the system multiplies the dilution factors. Do not exceed a combined onboard and manual dilution factor of 99,999.

6. Select **ACCEPT**.

Diluting Samples

When a patient sample is diluted either manually or onboard, the system will automatically calculate the actual concentration of the patient sample by multiplying the diluted patient sample result by the dilution factor.

Use this procedure to dilute samples onboard.

You can also perform manual dilutions offline and place the sample onto the system. See *Specifying Manually Diluted Samples*, page 2-54.

Diluting Samples Onboard

Note The barcoded diluent tube, appropriate to the assay, must be on the sample carousel.

To dilute a sample onboard, perform the following steps:

CAUTION
Use only IMMULITE 2000 diluent. Use all diluents before the expiration date printed on the packaging.

1. Find a patient record:
   a. On the Worklist entry screen, select **Display/Edit**.
   b. Select the patient record, then select **EDIT RECORD**.
   The Worklist entry screen for that patient displays.
2. Select **Dilution**.

   Note You must enter the Dilution Factor before the sample is pipetted.
3. Select the assay to dilute in the Tests Ordered window.

   The Dilution Factor window displays on the Worklist entry screen.

   Note If the sample includes a manual dilution, this dilution factor will be included in the automatic dilution factor. Do not exceed a combined onboard and manual dilution factor of 99,999. To specify the manual dilution see, *Specifying Manually Diluted Samples*, page 2-54.
4. Select a dilution factor:

Dilution Factors	Sample Volume (µL)*
3X	67
5X	40
10X	20
20X	10
40X	5
100X	5

*This is the sample volume pipetted. Additional volume is also required.

The Dilution Factor window closes, and the dilution factor displays in the Tests Ordered window.

Note You must select **ACCEPT PATIENT** for the worklist entry to be accepted. If you do not, the worklist entry is deleted.

5. Select **ACCEPT PATIENT**.

Note Pre-dilutions are performed onboard automatically for assays that require running pre-diluted patient samples. The dilution factor is 1 on the Worklist Display/Edit screen. If further dilution is necessary, it must be performed manually. Refer to *Specifying Manually Diluted Samples*, page 2-54 for more information.

Diluents with Damaged or Missing Barcodes

Note The IMMULITE 2000 system must identify manually assigned tubes each time the sample carousel is paused and re-interrogated. IMMULITE 2000 XPi systems must identify manually assigned tubes if the sample rack was ejected and reloaded.

Note Load the diluent and select **RUN** before proceeding.

To add a diluent to the worklist, perform the following steps:

1. At the Worklist entry screen, select **PATIENT**.

   Note Diluents are identified by the prefix ~D, followed by the corresponding diluent name, such as ~DHCG. The diluent name may be found in the Kits screen. Do not assign tests to a diluent tube.

2. In the **Accession #** field, enter the diluent name.
3. Select **Assign Tube Position**:
   a. Under **Select Rack To Use**, select the letter of the rack where you loaded the diluent.

      Under **Select Position To Use,** a graphical depiction of the positions on the sample rack displays. Standard samples are displayed as circles, and tube top sample cups (IMMULITE 2000 XPi only) and microsamples are displayed as squares. The sample status is indicated by the color of the numbered circle or square. Refer to the key for the status associated with each color.

   b. Under **Select Position To Use**, select the white circle or square where the diluent is located.

      The position turns red and the tube position (Rack and Position) displays at the bottom left on the window.

   c. Select **OK**.

      The Worklist entry screen displays. The tube position (rack and number) displays to the right of the **Assign Tube Position** button for this sample.

Note You must select **ACCEPT PATIENT** for the worklist entry to be accepted. If you do not, the worklist entry is deleted.

4. Select **ACCEPT PATIENT**.

Canceling an Onboard Dilution

Note Onboard dilutions can only be cancelled before the test is pipetted.

To cancel a dilution, perform the following steps:

1. On the Worklist entry screen, select **Display/Edit**.
2. Select the patient record, then select **EDIT RECORD**.

   The Worklist entry screen for that patient displays.
3. On the Worklist entry screen, select **Dilution**.
4. Select the assay to dilute in the Tests Ordered window.

   The Dilution Factor window displays on the Worklist entry screen.
5. Select **X1** to change the dilution factor to 1.

   The sample will not be diluted.

Specifying Manually Diluted Samples

If the dilution was prepared manually and placed on the system, perform the following steps to specify a dilution:

CAUTION
Do not attempt to enter manual dilution factors for samples that are in queue or in progress. The dilution factor is ignored and the result will not be corrected for the manual dilution.

CAUTION
Use only IMMULITE 2000 diluent. Use all diluents before the expiration date printed on the packaging.

IMMULITE 2000 diluent is concentrated. Prior to use as a manual diluent, the IMMULITE 2000 diluent must be diluted 1 part diluent to 1.5 parts water.

When a manual dilution factor is applied to a sample, all tests ordered on that sample are multiplied by that dilution factor.

If a manual dilution is specified on a panel that has an onboard dilution, the dilution factors are combined.

Note Do not perform reflexive testing on a manually diluted sample. If reflexive testing has been configured for the assay, you must remove the manually diluted sample tube before the reflexive test is pipetted and replace it with the neat sample.

To specify a manually diluted sample, perform the following steps:

1. On the Worklist entry screen, select **Display/Edit**.
2. Select the patient record, then select **EDIT RECORD**.

   The Worklist entry screen for that patient displays.

   Note If an onboard dilution was previously selected, this dilution factor will be included in the automatic dilution factor. Do not exceed a combined onboard and manual dilution factor of 99,999. To select an onboard dilution, see *Diluting Samples Onboard*, page 2-52.
3. Select **Manual Dilution**.

   The Manual Dilution window displays.
4. Enter the manual dilution factor, then select **OK**.

   For all tests ordered on this sample, the manual dilution factor displays on the Worklist entry screen under Dilution Factor.

   Note You must select **ACCEPT PATIENT** for the worklist entry to be accepted. If you do not, the worklist entry is deleted.
5. Select **ACCEPT PATIENT**.

Adding Calibration Verifiers to a Worklist

To add calibration verifiers to a worklist, perform the following steps:

1. Select **WORKLIST**.

   A blank Worklist entry screen displays.
2. Select **CALIB. VER.**

   The Calibration Verifier Worklist entry screen displays.
3. Enter the kit lot number, verifier lot number, and verifier level into the appropriate fields.
4. If available, enter the **High Range** and the **Low Range**.
5. To order verifier tests, perform the following steps:
   a. Select **TESTS**.
   b. Select the test from the Available Tests window.

c. To order additional replicates, select **REPLICATES**, then order the appropriate number of replicates.

d. Select **OK** to close the Replicates window.

e. Select **OK** on the Available Tests window.

Note To cancel a test, select the test name in the **Tests Ordered** field. The test name is now gray. To reorder the test, select the test name.

6. Select **Assign Tube Position**.

   The ASSIGN TUBE POSITION window displays.

   Assign a calibration verifier to a tube position:

   a. Under **Select Rack To Use**, select the letter corresponding to the sample rack where the sample is located.

      Under **Select Position To Use,** a graphical depiction of the positions on the sample rack displays. Standard samples are displayed as circles, and tube top sample cups (IMMULITE 2000 XPi only) and microsamples are displayed as squares. The sample status is indicated by the color of the numbered circle or square. Refer to the key for the status associated with each color.

   b. Under **Select Position To Use**, select the white circle or square on the sample rack where the sample tube is located.

      The position turns red and the tube position (Rack and Position) displays at the bottom left on the window.

   c. Select **OK**.

      The Worklist entry screen displays. The tube position (rack and number) displays to the right of the **Assign Tube Position** button for this sample.

   Note You must select **ACCEPT VERIFIER** for the worklist entry to be accepted. If you do not, the worklist entry is deleted.

7. Select **ACCEPT VERIFIER**.

8. Repeat steps 2 through 7 until tests are assigned for each calibration verifier sample.

   Note Calibration verifier reports (as well as other reports) are printed automatically if these options are selected in the Configuration Settings window.

Worklist Display Options

Worklist management and display options allow you to:

- Display a worklist.

- Print a worklist.
- Modify a worklist entry.
- Delete a worklist entry.
- Save and import a worklist.

Displaying a Worklist

To view all current records in the worklist, perform the following steps:

1. Select **WORKLIST**.
2. Select **DISPLAY/EDIT**.

   The Worklist Display/Edit screen displays.
3. Select **UPDATE SCREEN**.
4. Sort the worklist by selecting one of the options next to Sort List By.

   The worklist can be sorted by:
   - Accession Number
   - Entered Order
   - Test Name in alphabetical order
   - Name in alphabetical order
   - Rack Order
   - Adjustors (to display Adjustors first)
   - Controls (to display Controls first)
   - Patients (to display Patients first)
   - Calibrator Verifiers (to display Calibrator Verifiers first)
   - Status (to display samples by current status)

   Note The Sample Type column displays either A for Adjustor, C for control, P for patient, or V for calibration verifier.
5. To scroll through the worklist, select **UP** or **DOWN**.

Printing a Worklist

Either an individual record or the entire worklist can be printed from the Worklist entry screen.

To print an individual record, perform the following steps:

1. Select **WORKLIST**.
2. Navigate to the appropriate record.

3. Select **Print Record**.

   The worklist record prints.

To print the entire worklist, perform the following steps:

1. On the Worklist entry screen, select **Print All**.

   The PRINT WORKLIST window displays.

2. If necessary, select one of the **Sort Printout By** options.
3. Select the type of record to print by selecting one of the **Print** options.
4. Select **PRINT**.

   The PRINT WORKLIST window closes and the worklist prints.

Deleting a Worklist Entry

A worklist entry can be deleted from either the Worklist entry screen or the Worklist Display/Edit screen.

To delete a worklist entry from the Worklist entry screen, perform the following steps:

Note A record can be deleted only if currently, the test is not in progress.

1. Select **Previous** or **Next** to locate the record.
2. Select **DELETE PATIENT**, **DELETE CONTROL**, **DELETE VERIFIER**, or **DELETE ADJUSTOR**.

   The record is deleted.

To delete a worklist entry from the Worklist Display/Edit screen, perform the following steps:

1. On the Worklist screen, select **Display/Edit**.
2. Select the record(s).

   Note Select more than one record to delete multiple records at a time.

3. Select **DELETE RECORD**.

   The selected records are deleted.

Modifying a Worklist Entry

Worklist entries can be modified from either the Worklist entry screen or the Worklist Display/Edit screen.

Modifying a Worklist Entry from the Worklist Entry Screen

Note A record can be modified only if the sample is currently onboard the system and that particular test is not in progress.

To modify a worklist entry, perform the following steps:

1. Select **WORKLIST**.
2. Select **Previous** and **Next** to locate the record.
3. Make changes.

   Note You must select **ACCEPT PATIENT** for the worklist entry to be accepted. If you do not, the worklist entry is deleted.
4. Select **ACCEPT PATIENT**.

Modifying a Worklist Entry from the Worklist Display/Edit screen

Note Modifications can be made to all records that are not in progress.

To modify a worklist entry, perform the following steps:

1. On the Worklist entry screen, select **Display/Edit**.
2. Select **Update Screen** to refresh the worklist.
3. Select the record.
4. Select **EDIT RECORD**.

   The Worklist entry screen displays the selected record.
5. Make changes.

   Note You must select **ACCEPT PATIENT** for the worklist entry to be accepted. If you do not, the worklist entry is deleted.
6. Select **ACCEPT PATIENT**.

   The Worklist Display/Edit screen displays.

Saving and Importing a Worklist

The Save and Import functions are used to save a common worklist for future use.

To save a worklist, perform the following steps:

1. On the Worklist entry screen, select **Display/Edit** to view the entire Worklist.

   The Worklist Display/Edit screen displays.
2. Select **SAVE WORKLIST**.

   The Export Worklist window displays:

3. Select **Binary File** (a coded file) or **ASCII File** (a text file).

   Note Use ASCII File when the file is to be imported into another application, such as Microsoft Office Excel.

4. Select **OK**.

   The Save As window displays.

5. Double-select on the directory where the worklist file should be stored.

   Note The scroll bar may be needed to view all the directories.

6. Enter a name in the **File name** field, then select **Save**.

   The Save As window closes and the worklist is saved.

Importing a Worklist

To import a previously saved worklist, perform the following steps:

1. On the Worklist entry screen, select **DISPLAY/EDIT**.

   The Worklist Display/Edit screen displays.

2. Select **IMPORT WORKLIST**.

   The Import Worklist window displays.

3. Select the file format used when the file was saved, either **Binary File** or **ASCII File**.

4. Select **OK**.

5. Double-select the directory where the file is stored.

   Note The scroll bar may be needed to view all the directories and files.

6. Double-select the filename.

7. The name displays in the **Filename** field.

8. Select **Open**.

   The system clears the current worklist and displays the imported worklist.

Checking Kit Components from the Worklist Entry Screen

You can check the status of the kit components onboard the system, including the bead packs, reagent wedges, and diluents.

Note If the system detects that kit components or consumables are needed to run the current worklist, the Consumables button turns red.

To check the status of the kit components onboard the system, perform the following steps:

1. After the system is in RUN mode, select **Consumables** on the Worklist entry screen.
2. If appropriate, print the report by selecting **Print Report**.
3. Load any needed kit components.
4. Select **RUN** to begin processing.

   Note The next time the Consumables button is selected or the next time the sample barcodes are read, the button returns to gray.
5. To close the Consumables Report window, select **CLOSE**.

Find Last Tube Location

This feature is available for barcoded patient samples only.

To determine the rack and position where a specified tube was last located, perform the following steps:

Note In the Display Options window of the Menu – Configure screen, ensure that **Use barcode rack identifier** is selected (see *Configuring Display Options*, page 8-1). The Find Last Tube Location feature will not work unless it is activated.

1. On the horizontal toolbar, select **MENU**.
2. Select **Find Last Tube Location**.
3. In the FIND LAST TUBE LOCATION window, enter the unique accession number of the tube.
4. Select **FIND**.

   The location of the tube for that accession number displays in the FIND LAST TUBE LOCATION window.

Test Status

To run the assays, select **RUN** from the horizontal toolbar.

As tests complete, results display in the RESULTS WINDOW on the Home screen.

Note The RESULTS WINDOW on the IMMULITE 2000 XPi Home screen toggles. See *IMMULITE 2000 XPi Home Screen*, page 1-23.

Using Sample Tubes in Racks to Check a Sample Status

To check the status of the samples onboard the system, perform the following steps:

1. On the horizontal toolbar, select **MENU**.
2. Select **Sample Tubes in Racks**.

   The Sample Tubes in Rack screen displays.
3. To display the most current information on the samples, select **Update**.
4. To access the Sample Rack Detail window, select a rack letter.
5. To access the detailed sample information on the Sample Rack Detail window, select a specific sample tube position (1-15) on a rack.
6. To leave the screen, select **CLOSE**.

Checking the Tests Ordered and Time Remaining

With the system in RUN mode, perform the following steps to view the tests ordered and the test time remaining for a particular sample:

1. At the Home screen, select the appropriate rack.

   The Sample Rack Detail window displays:
   - The samples currently onboard the selected Sample Rack
   - The name, sample type, and tube type for the selected sample
   - The tests running for the selected sample with the time remaining
   - The tests resulted for the selected sample

   The sample description next to the numbers (1–15) indicates the sample type.

Sample Type	Sample Description
Patient	Displays as either the accession number or the patient's name.
Adjustor	Begins with ~A.
Control	Begins with ~C or can be user-defined.
Calibration Verifier	Begins with ~V.
Diluent	Begins with ~D.

Sample Type	Sample Description
Dedicated Rack Identifier for Tube Top Samples	Position 2, which is the position of the Dedicated Rack Identifier, always indicates an empty tube position.
Probe Clean	Displays ~Probe Clean.

2. To select a particular sample, select the appropriate accession number.

   The information associated with the accession number displays to the right.

3. Select **CLOSE** to return to the Home screen.

   Note To display the Sample Tubes in Racks screen, select **SAMPLE TUBES**.

Using FIND to Check a Sample Status

To check the status of the samples onboard the system, perform the following steps:

1. At the Home screen, select **FIND**.

   The FIND SAMPLE window displays.

   The default entry in both the **From** and **To** fields is the current date.

2. If appropriate, change the date range.
   a. Select the Date **From** field, then select a date from the calendar.
   b. Select the Date **To** field, then select a date from the calendar.

3. Make any selections in the **Accession #**, **Name**, **Test Type**, and **Allergen Type** fields to enter other details about the sample.

   Note Enter a single letter in the **Name** field to find samples with names that begin with that letter.

4. Select **FIND**.

   The RECORDS FOUND window displays information about the samples that match the criteria entered.

5. To view historical results for a patient or sample:
   a. Select a record in the **RECORDS FOUND** window.
   b. Select **REVIEW**.

      The Review screen for this patient or sample displays.

Reviewing Results

To review results from a sample previously run, perform the following steps:

1. On the horizontal tool bar, select **REVIEW**.

   A blank Review screen displays.

   Note If the Time field is empty, the default time is TODAY ONLY. To change the time range, see *Changing the Time Period*, page 2-65.

2. Select one of the following option buttons, indicating the result type:
   - All
   - Patient
   - Adjustor
   - Control
   - Verifier (for calibration verifier)

   Note The type of data displayed on the Review screen varies depending on whether the result is a patient, control, adjustor, or calibration verifier.

3. Use the buttons to view the results or to print a particular sample's results.

   The following table describes the remaining buttons on the Review screen:

Button	Description
PgUp or PgDn	Displays the previous or next page of results for this sample.
UP and DOWN	Scrolls through the results for a particular sample one by one.
Previous and Next	Displays the previous or next sample's results.
Print Patient, Print Adjustor, Print Control, or Print Verifier	Prints all the results for the sample with this Accession number.
Search	Allows the operator to search for a specific result. Refer to *Searching for a Result*, page 2-66 for more information. The search option is not available if **All** is selected.

Note If reference ranges were entered, the reference ranges display for the highlighted test. Refer to *Defining Test Ranges*, page 8-14 for information on entering ranges.

4. Select the appropriate test to view the reference ranges for this test.

Changing the Time Period

To change the time period for the records displayed in the Review screen, perform the following steps:

1. Select **Time**.

   The Select Time Method window displays.

2. Select the appropriate button according to the information in the following table:

Button	Function
FROM TO	Displays the results from a specified time and date **Note** You must enter the times and dates in the From and To fields (using the calendar and the clock) and select **OK**.
TODAY ONLY	Displays results for the current date.
ALL	Displays all the patient, adjustor, control, or calibration verifier results (depending on the button selected). If you selected **All**, all records in the database are displayed.

3. If you selected **TODAY ONLY** or **ALL** in step 2, select **OK**.

   The new default time specification displays to the right of the **Time** button (on the Review screen).

4. If you selected **FROM TO** in step 2:
   a. To access the calendar and select a date, select the date field.
   b. To access the clock and select a time, select the time field.
   c. Select **OK**.

   Note Based on the configured time format, the **From** time defaults to 12:00:00 AM or 00:00:00 and the **To** time defaults to 11:59:59 PM or 23:59:59.

The new time period specification displays in the field at the top of the Review screen.

Searching for a Result

To search for a record, perform the following steps:

1. Select **REVIEW**.

   A blank Review screen displays.

2. On the Review screen, select one of the option buttons, indicating the type of result to review:
   - Patient
   - Adjustor
   - Control
   - Verifier (for calibration verifier)

   Note If **ALL** is selected, a search cannot be performed.

3. Select **Search**.

   Note The Search window varies depending on the record type: patient, control, adjustor, or calibration verifier.

   The Search window searches for sample results. The search options for adjustor, control, or calibration verifier results are listed in the following table:

Result Type	Available Search Options
Patient	• Accession Number • Patient ID • Patient Name • Physician Name • Test Type • Allergen Type
Adjustor	• Test Type • Kit Lot

Result Type	Available Search Options
Control	• Control Name • Control Lot • Test Type • Allergen Type
Calib. Verifier	• Verifier Lot Number • Test Type • Kit Lot • Verifier Level

4. To choose the time frame to search, select **Time**.

   The default is the current date.

5. Enter the search information, then select **OK**.

   The Records Found window displays the records meeting the search criteria.

   Note Select the **Exact Match** option to view the records that identically meet the search criteria. If the **Exact Match** checkbox is not selected, anything similar to the entered data will be displayed.

6. Select a result, then select **OK**.

   The Review screen for that record displays.

Reviewing LIS Results

To display and sort the data received from the LIS and the results to be sent to the LIS, perform the following steps:

1. From the Horizontal toolbar, select **LIS**.

   The LIS screen displays the data.

The viewing options selected the last time the LIS screen was accessed determine the information displayed when the LIS button is selected. The following table describes the LIS status:

Note For the data status, refer to the color key along the bottom of the screen.

LIS Status	Description
Resulted	Test complete; answer has not been sent to LIS.
Waiting	The sample is on the system, but the test has not started.
No Sample	The sample is not on the system.
Sent	This record was previously sent to LIS.
In-Queue	The test is close to being processed.
In Progress	The test is being processed.
Duplicate	This is a duplicate accession number.
Diluent err	A problem with the diluent was detected.
Neg Ctrl err	A problem with the negative control was detected.
Deactivated	The kit lot was deactivated for all samples or for all patient samples.
Allergen err	A problem with an allergen was detected.
Reagent err	A problem with the reagent was detected.
No Reagent	Insufficient reagent to run the test.
Bead err	A problem with the bead was detected.
No Bead	No beads available for this test.
Sample Error	A problem with the sample tube was detected, such as not enough sample or clot detected.

If applicable, select **Hide Sent** to show results already sent to the LIS.

Note The button will change to **Show Sent**.

2. To sort the LIS data, select **Sort By...**
3. If applicable, specify a period other than **Prior 24 Hours** by selecting **Define Range**:
   a. To access the calendar and select a date, select the date field.
   b. To access the clock and select a time, select the time field.

4. To sort the results, select one of the sort buttons:
   - Accession Number
   - Order Created
   - Name
   - Test Type
5. To print the list, select **Print List**.

Sending Results to the LIS

You can configure the system to send data to the LIS automatically (see *Configuring the LIS*, page 8-8). If the system is not configured to send results automatically, perform the following steps to send results to the LIS manually:

1. Select the results to be sent by clicking on them or select **Tag All** to tag all results for transmission to the LIS.
2. To transmit the tagged results to the LIS, select **Send**.

N/A results cannot be manually or automatically sent to LIS from an IMMULITE 2000/IMMULITE 2000 XPi system.



WARNING

Do NOT manually transmit N/A results from the VersaCell system or the VersaCell X3 system to the LIS because the N/A result will be sent as less than the assay range to the LIS and can lead to misreporting of a patient sample as a discrepant low result. N/A results from the IMMULITE 2000/ IMMULITE 2000 XPi system are associated with overdilution of a sample and should not be transmitted to the LIS.

Note The test in question should be repeated according to the laboratory's testing protocol.

Resending Data

To resend results previously sent to the LIS, perform the following steps:

1. At the LIS screen, select **Hide Sent**.

   The results previously sent to the LIS display.
2. Select the results to be sent by clicking on them.
3. Select **Re-Send** to transmit the results to the LIS.

Clearing LIS Data

Note The **Clear** button does not delete records from the database.

To clear records from the LIS screen, perform the following steps:

1. Perform one of the following actions to select the records to be cleared:
   - Select the records.
   - Select **Tag All**.
2. Select **Clear**.

   The message `Do you wish to permanently Clear ALL selected records from the LIS Screen?` displays.
3. Select **Clear Records**.

   The selected records no longer display in the LIS screen.

3 Adjusting the System

Master Curve/Two-Point Adjustment 3-1

Adjustment Overview 3-1

Master Curve Generation 3-1

Four-Parameter Logistic 3-1

Point-to-Point 3-2

Two-Point Adjustment 3-2

Judge Adjustment Validity 3-3

Controls Run Immediately Following an Adjustment 3-4

The Adjustment Slope for an Initial Adjustment 3-4

Intercept of Adjustment for an Immunometric (Sandwich) Assay 3-5

Intercept of Adjustment for a Competitive Assay 3-6

Summary 3-6

Readjustment 3-6

Slopes of Readjustment 3-6

Intercepts of Readjustments 3-6

Master Cutoff Generation for Qualitative Assays 3-7

Immunometric (sandwich) assays 3-7

Competitive assays 3-7

Indeterminate assays 3-7

Measure the Cutoff for an Assay 3-7

Calculation of Ratios 3-8

Immunometric (Sandwich) Infectious Disease Assays 3-8

Competitive Infectious Disease Assays 3-8

Qualitative flags are determined by the following equations: 3-9

Adjusting the System

Master Curve/Two-Point Adjustment

System calibration uses a stored master curve in conjunction with a two-point adjustment procedure. This section provides an overview of this calibration method.

Adjustment Overview

The system determines analyte concentration using a stored master curve. The manufacturer generates the curve for each lot of reagents and provides it in the kit bar-code label (see *Kit Barcode*, page 1-14). The system uses Adjustors to correlate the counts per second (CPS) of the system to those of the system used to generate the master curve.

Master Curve Generation

The manufacturer generates the master curves for each lot of reagents by running, on a single system, replicates of a set of standards spanning the reportable range of the assay.

The number of standards varies with the analyte and ranges from 6, for Total T4 (range 1 to 24 µg/dL), to 15, for TSH (range 0.002 to 75 µIU/mL). The standards are analyzed multiple times in several runs in random order. Replicates of a low and high Adjustor are included in every run.

Generally, the master curve is fitted using a four-parameter logistic model. For certain reagents, such as the universal reagent for specific allergy assays, a point-to-point curve model is used.

Four-Parameter Logistic

For the four-parameter logistic method, the generated master curve is the equation of the line that best fits the master curve data.

Note The numerical values of the equation's 4 parameters vary from reagent lot to reagent lot. The numerical values are encoded in the kit bar-code label. The average CPS of the low and high adjustors, which were analyzed at the same time the standards used for the master curve were analyzed, are also encoded in the kit bar-code label.

The system uses 2 different forms of the general four-parameter logistic equation:

- Form for competitive assays:

$$CPS = P1 + \frac{P2}{1 + EXP(-(P3 + P4 \times Ln(Dose)))}$$

  where: P1 = maximum CPS (Bo)
  - P2 = minimum-maximum CPS (NSB - Bo)
  - P3 = intercept of a logit-log plot
  - P4 = – slope of the logit-log plot

- Form for immunometric (sandwich) assays:

$$CPS = P2 + \frac{P1 - P2}{1 + (Dose / P3)^{P4}}$$

  where: P1 = maximum CPS
  - P2 = minimum CPS (NSB)
  - P3 = dose at half the maximum CPS
  - P4 = – slope of the logit-log plot

Point-to-Point

In the point-to-point curve model, the calibration curve is generated when each standard is connected point-to-point by a straight line.

Two-Point Adjustment

Because the calibration data used to generate the master curve uses a single system, the signal (CPS) for any other laboratory system must match the signal of the Master Curve system to directly use the master curve to calculate results.

Because no 2 photomultiplier tubes (PMT) give exactly the same measured CPS for the same amount of light, the signal of each laboratory system must be adjusted to match that of the Master Curve system for the master curve to be used across all systems. This is done using the two-point adjustment process.

If a full standard curve is run on both the Master Curve and the customer systems, the relationship between the measured CPS from the 2 systems (Master System vs. customer system) is consistently linear. For example, possible data for an assay with 6 standards is displayed in the following table:

Standard	Master Curve System CPS	Customer System CPS
Std A	85,176	75,112
Std B	329,714	293,703
Std C	1,079,469	961,223
Std D	5,112,318	4,568,847
Std E	10,125,798	9,050,371
Std F	25,087,126	22,424,222

This relationship is used to modify or adjust the CPS from the system to correlate with the Master Curve values. Because the relationship between the laboratory system and the Master Curve CPS values is a straight line, only 2 points are required to characterize the line.

These 2 points are defined by the 2 adjustors. Comparing the average CPS of the adjustors run on the master system (from the kit bar-code label) and the CPS run on the customer system during an adjustment, the slope and intercept of the linear relationship are calculated. Using the following equation, the slope and intercept are then used to adjust the CPS for any sample to the CPS that would have been observed if the sample was run on the Master Curve system.

Master Curve CPS = $CPS_{unknown}$ x Slope + Intercept

The adjusted CPS can now be used to calculate the result directly from the Master Curve.

The purpose of the initial adjustment of a new kit lot is to correlate the CPS of the laboratory system to that of the Master Curve system. Subsequent readjustments update the correlation for changes in the reagent enzyme activity over time.

Judge Adjustment Validity

You can use the following guidelines to establish whether a given adjustment has been successful. They are presented in order of importance:

1. Control values run immediately following an adjustment.

2. The slope of an adjustment.
3. The intercept of an adjustment.

   If an adjustment does not meet the guidelines, readjustment may be necessary.

   Note The adjustment printout will have a slope, intercept, and message indicating whether or not the adjustment was complete.

Controls Run Immediately Following an Adjustment

Results from quality control samples run immediately following an adjustment are the primary means of validating an adjustment and should be within the established limits for acceptable performance.

Take special care to note situations where all quality control results are at the same (high or low) limit of acceptance because this may indicate a bias in the adjustment.

The Adjustment Slope for an Initial Adjustment

An initial adjustment slope refers to the first slope generated on a new kit lot. The initial adjustment slope generally falls within ± 20% of the mean slope for the system.

The mean slope is the average of at least 10 initial slopes of adjustment on a single system, using one of the following adjustments:

- Initial adjustments of more than 1 type of assay, excluding assays with single adjustors.
- Initial adjustments of more than 1 lot of reagent, if only 1 assay is being used.

  Note If fewer than 10 adjustments are run, an average can still be calculated. However, this average should be regarded as preliminary and must be recalculated when 10 adjustments are completed.

For example, using the following data:

Kit	Lot	Slope
COR	109	0.687
E2	107	0.986
E2	109	0.894
E2	110	0.983
TSH	110	1.009
TSH	125	0.993
TSH	127	0.989
T4	127	1.053
T4	117	1.008
TU	113	No slope calculated for TU
T3	115	0.998

1. The mean (average) slope is calculated as follows:

   Mean = Sum of the slopes/10 = 0.96

2. The acceptable 20% deviation from the mean is calculated as follows:

   Deviation = Mean x 0.20 = 0.96 x 0.20 = 0.19

3. The range for an acceptable slope is calculated as follows:

   High Limit = Mean + 20% = 0.96 + 0.19 = 1.15

   Low Limit = Mean − 20% = 0.96 − 0.19 = 0.77

   Range = Mean ± 20% = 0.77 to 1.15

Intercept of Adjustment for an Immunometric (Sandwich) Assay

A large intercept affects the calculation of results only at very low concentrations. An acceptable intercept may be interpreted as follows:

absolute value of the intercept = low Adjustor CPS of the master curve system x 30%

The low adjustor CPS refers to the adjustor CPS information found on the Kit screen or the adjustment printout, not to the CPS measured during adjustment. For example:

CPS of low Adjustor = 83,000
Acceptable intercept: 83,000 x 0.30 = 24,900

The guideline maximum intercept is 24,900.

Intercept of Adjustment for a Competitive Assay

A large intercept can affect values across the curve, especially those in the very high range of the assay.

For competitive assays, an acceptable intercept should be ≤ 2% of curve parameter P1 found on the Kit screen. For example:

P1 = 61,500,000

Acceptable intercept: 61,500,000 x 0.02 = 1,230,000

Summary

- Controls run immediately after an adjustment should be within acceptable limits.
- The slope of an adjustment should fall within ± 20% of the mean slope for that system.
- The intercept of an adjustment generally falls below a maximum calculated intercept limit.
- Based on these guidelines, if an adjustment does not appear to be valid, readjustment may be necessary.

Readjustment

Every assay must be periodically readjusted, as indicated in the kit's instructions for use, to correct for the reagent's normal loss of activity.

Slopes of Readjustment

Slopes of readjustments should fall within 10% of the previous adjustment.

Note Slope variation is caused by normal statistical variation of the assay and a 10–15% loss in enzyme activity over the lifetime of a kit.

Intercepts of Readjustments

Judge the readjustment intercepts according to the above criteria.

Master Cutoff Generation for Qualitative Assays

In qualitative assays, the results are classified as non-reactive or reactive, or possibly indeterminate. The results of these assays are calculated by comparing the signal obtained for a patient sample to a cut-off signal.

Immunometric (sandwich) assays

If patient CPS > cutoff, the result is reactive.

If patient CPS < cutoff, the result is non-reactive.

Competitive assays

If patient CPS < cutoff, the result is reactive.

If patient CPS > cutoff, the result is non-reactive.

Where an indeterminate region is defined, it is usually a percentage above and below the cutoff.

Indeterminate assays

If the percentage = 10% cutoff, then...

0.9 x cutoff < Indeterminate < 1.1 x cut-off

Measure the Cutoff for an Assay

The cutoff for an assay is usually established in 1 of 2 ways:

- A cutoff is determined statistically.

  A cutoff is calculated which achieves the optimal sensitivity and specificity.

  Several hundred patients, both reactive and non-reactive, whose clinical status has been established by another method, are assayed on the system.
- An alternate method for choosing the cutoff, used especially for allergy assays, is based on the variability in signal response seen with a very large number of non-reactive patient samples.

Qualitative assays have a single adjustor (or calibrator) used to establish the relationship of the master cutoff to an individual system. For example, if the cutoff for an assay is determined to be 100,000 CPS, and an adjustor (or calibrator) run at the same time reads 80,000 CPS, a ratio of 1.25 (100,000/80,000) is used with the adjustor to correctly establish the cutoff for a specific system.

The single adjustor is supplied with the kit, and the ratio of the adjustor CPS to the cutoff value is supplied in the kit bar-code label as Parameter 1 (P1). At adjustment, the average CPS of the adjustor obtained from the system is multiplied by P1 to determine the specific cutoff for that system.

Parameter 2 (P2) and Parameter 3 (P3) are factors used as appropriate to set the upper limit (P2) and lower limit (P3) of the indeterminate region. If an indeterminate region is defined, then **P2 x the adjustor CPS** and **P3 x the adjustor CPS** will give the signal above and below the cutoff defining the indeterminate region. The percentage above and below the cutoff is defined by **P2/P1*100 and P3/P1*100**. If no indeterminate is defined for an assay, P2 and P3 are 0.

For assays with a single adjustor, an adjustor index is calculated upon adjustment. This is the ratio of the CPS obtained during the adjustment to the CPS of the adjustor on the Master Curve system at Siemens, which is found on the kit bar-code label.

$$\text{Adjustor Index} = \frac{\text{Adjustor CPS}}{\text{Kit Bar-Code Adjustor CPS}}$$

Note The adjustor index is not used in the calculation. Instead, it is calculated as a guideline to the validity of the adjustment. Results obtained with Quality Control samples are still the primary way to judge an adjustment.

Calculation of Ratios

The system can also report qualitative assays by means of a ratio. The system can report the numerical ratio, followed by an indication of R, NR, or I representing reactive, non-reactive, and indeterminate, respectively. Ratios are determined by the following calculations:

Immunometric (Sandwich) Infectious Disease Assays

$$\text{Ratio} = \frac{\text{CPS of Sample}}{\text{Cutoff}}$$

Cutoff = P1 x Adjustor CPS

Competitive Infectious Disease Assays

$$\text{Ratio} = \frac{\text{Cutoff}}{\text{CPS of Sample}}$$

Cutoff = P1 x Adjustor CPS

Qualitative flags are determined by the following equations:

If the Ratio is greater than or equal to **(1 + P2 / P1)**, the result is marked as Reactive (R).

$$Ratio^{3}(1 + P2/P1)$$

If the Ratio is less than **(1 – P3 / P1)**, the result is marked as Non-Reactive (NR).

$$Ratio < (1 - P3 / P1)$$

If the Ratio is greater than or equal to **(1 – P3 / P1)**, but less than **(1 + P2 / P1)**, the result is marked as Indeterminate (I).

$$(1 - P3 / P1) \leq Ratio < (1 + P2 / P1)$$

4 Quality Control

Entering Bio-Rad Control Identification Information. 4-1
Bio-Rad Controls for IMMULITE 2000 Systems 4-2
Sending Bio-Rad Control Data to the LIS 4-3
Quality Control Management. 4-3
Entering New Control Information 4-4
Adding New Tests 4-4
Entering Target Values. 4-5
Completing the QC Procedure 4-6
Acceptance Criteria 4-6
Using Control Not for On-line QC. 4-6
Using Single Rule QC 4-6
Using Multi Rule QC 4-7
Editing a Control 4-9
Adding a Level 4-9
Changing a Level 4-9
Deleting Tests for a Control 4-10
Qualitative Controls 4-10
Controls Reported as Ratios 4-11
Editing Control Information 4-11
Reviewing Control Data 4-12
Adding Comments 4-15
Creating Comments 4-15
Removing Points 4-16
Scheduling QC Assays for the IMMULITE 2000 XPi 4-16
Adding a QC Worklist 4-16
Adding a Control to a QC Worklist 4-17
Editing a Control in a QC Worklist 4-18
Scheduling a QC Worklist. 4-19
Copying a QC Worklist 4-20
Deleting a Worklist. 4-20

Quality Control

On all (UI) screens and reports that display controls, IMMULITE 2000 systems support full Bio-Rad control definitions, which include a 4-character control name and a 5-digit-control lot number. Bio-Rad control definitions currently configured on your system are still supported.

IMMULITE 2000 systems support barcode labels generated for Bio-Rad controls. To generate barcodes for Bio-Rad controls, perform the following steps:

1. Connect to the Internet and navigate to **www.qcnet.com**.
2. Select **Lab Tools**.
3. Select **Barcode Label Generator**.
4. If needed, create a login.

To ensure control data is grouped appropriately for Bio-Rad peer group reports and QC alerts, use the following naming conventions.

Entering Bio-Rad Control Identification Information

Note The system requires this information to calculate and report control data.

For Bio-Rad controls, use the control name (see Table 4-1 on page 4-2).

1. Select **QC**.
2. Select **DATA ENTRY**.
3. Select **New Control**.
4. In the **Name:** field,
   - For 5-digit lot numbers, enter the 4-character control code (see Table 4-1 on page 4-2).
   - For 3-digit lot numbers, enter the 4-character control code plus the first 2 digits of the Control Lot.
5. In the **Source:** field, enter the source (optional).
6. In the **Lot #:** field,
   - For 5-digit lot numbers, enter the 5-digit Control Lot.
   - For 3-digit lot numbers, enter the last 3 digits of the Control Lot.
7. Select the **Expiration Date** field.

Note The default calendar entries are the current month and year.

You must select the expiration date from the calendar in the following order: month, year, day.

8. Enter the control levels.

Bio-Rad Controls for IMMULITE 2000 Systems

For any Bio-Rad controls not listed below, or for Bio-Rad control lots with special levels, please contact your Technical Solutions Center.

Table 4-1: Four-Character Bio-Rad Controls for IMMULITE 2000 Systems

Control Name	Code
Liquichek Cardiac Markers LT Low	CMLL
Liquichek Cardiac Markers Plus	CMPS
Liquichek Cardiac Markers Plus LT	CMLT
Liquichek Cardiac Markers Plus LT Low	CMPL
Liquichek Homocysteine	HCYS
Liquichek Immunoassay Plus	IAPL
Liquichek Specialty IA	SILI
Liquichek TDM	TDLI
Liquichek Tumor Marker	TMLI
Lyphochek Anemia	ANLY
Lyphochek Fertility	FRLY
Lyphochek Immunoassay Plus	IAPL
Lyphochek Maternal Serum	MSLY
Lyphochek TDM	TDLY
Lyphochek Tumor Marker Plus	TMLY

Sending Bio-Rad Control Data to the LIS

When configured to send a 5 digit lot number, the IMMULITE 2000 systems send Bio-Rad control data to the LIS in the following new format:

Table 4-2: Bio-Rad Controls

Position	Description
First 2 characters	~C (use uppercase letter) defines the data as a control record.
Next 4 characters	Bio-Rad Control Name (should not be empty)
Next 5 characters	Control Lot (should not be empty)
Next 6 characters	Expiration Date (use YYYYMM format; should not be empty)
Last 1 character	Control Level (should not be empty)

When configured to send a 3 digit lot number, the IMMULITE 2000 systems send Bio-Rad control data to the LIS in the following new format:

Table 4-3: Bio-Rad Controls

Position	Description
First 2 characters	~C (use uppercase letter) defines the data as a control record.
Next 6 characters	Bio-Rad Control Name plus the first 2 digits of the Control Lot (should not be empty)
Next 3 characters	Last 3 digits of the Control Lot (should not be empty)
Next 6 characters	Expiration Date (use YYYYMM format; should not be empty)
Last 1 character	Control Level (should not be empty)

Quality Control Management

The system software provides several statistical control options that allow you to tailor the system based on the laboratory's specific needs with respect to online quality control. You can select either the single rule or multi rule approach to statistical quality control to determine if a control is acceptable. You can also configure the system to not use control results for online quality control.

Note Control specifications are configured on the Control Entry screen.

You can configure the system to prohibit unacceptable results from being automatically sent to the LIS. These autosend options are included on the LIS Configuration screen. See *Configuring the System*, page 8-1.

Entering New Control Information

To enter new control identification information, see *Entering Bio-Rad Control Identification Information*, page 4-1.

Adding New Tests

1. Select **Add New Tests**.
2. Select **ACTIVE KITS** or **ON BOARD**:
   - If you select **ACTIVE KITS**, a button for every Immunoassay, Allergy, or Confirmatory test scanned into the system displays in the center of the window.
   - If you select **ON BOARD**, a button for every Immunoassay, Allergy, or Confirmatory test physically residing on the system displays in the center of the window.
3. For Immunoassay, select the appropriate immunoassay button.

   The code for the selected assay displays in the Tests Selected field.
4. For Allergy, see *Adding Controls to a Worklist*, page 9-15 and *Loading Allergens and Allergen Wedges*, page 9-4.
5. For Confirmatory, select the appropriate confirmatory test button.
6. Select **OK**.
7. To add a control level, select **Add New Level**.

   The New Control Level window opens.
8. Enter the control level.
9. Select **OK**.

   The system automatically assigns an accession number to the control level. For a control without a barcode, you must enter this accession number into the Worklist screen to complete the order.

   See *Controls Without Barcodes*, page 2-42.
10. If an LIS control accession number does not match the system-assigned accession number, overwrite the system-assigned accession number with the LIS accession number.

    Note The accession number in the system must match the LIS control accession number.

To view tests and ranges for other controls, select **Previous Control** or **Next Control**.

To add another test for the same control, perform steps 1 through 10 in *Adding New Tests*, page 4-4 and follow the steps in *Acceptance Criteria*, page 4-6.

Entering Target Values

Note Bio-Rad does not provide the SD on the data sheet for their controls. To calculate the SD, perform the following steps:

1. From the METHOD table of the control data sheet, find the range on the appropriate line.
2. Perform the following calculation:

$$SD = \frac{HighRange - LowRange}{4}$$

3. Enter the SD value in the SD field of the QC Data Entry screen.

Based on the option selected in step 7 of *Adding a Level*, page 4-9, perform steps 1 through 5:

1. If you selected **Control Not for On-Line QC**, perform the following steps:
   a. Enter the Mean, SD, and SD Multiplier.
   b. Select **Calculate Range** to calculate the Low and High Limits.

      The SD Multiplier reflects the range for the standard deviation. The default is 2.
2. If you selected **Use Single Rule**, perform the following steps:
   a. Enter the Mean, SD, and SD Multiplier.
   b. Select **Calculate Range** to calculate the Low and High Limits.

      The SD Multiplier reflects the range for the standard deviation. The default is 2.
3. If you selected Use Multi Rule, perform the following steps:
   a. Enter the Mean and SD.
   b. Select the appropriate rule options.

      1 (2s) Rule is the default.
4. Select **Save**.
5. Select **OK**.

Completing the QC Procedure

1. Select **Save**.

   If you changed the accession number for this level of control, a confirmation message displays.

2. Select **Yes** to confirm the change, or **No** to cancel it.
3. Select **OK**.

Acceptance Criteria

In the upper right corner of the QC Data Entry screen, select one of the acceptance criteria options:

- Control Not for On-Line QC
- Use Single Rule
- Use Multi Rule (not available for allergy controls)

Using Control Not for On-line QC

If you are not using the control result for online quality control, perform the following steps:

1. Select **Control Not for On-line QC**.
2. In the **Mean** field, enter the mean.
3. In the **SD** field, enter the standard deviation.
4. In the **SD Multiplier** field, enter the standard deviation multiplier.

   The SD Multiplier reflects the range for the standard deviation. The default is 2.

5. Select **Calculate Range**.

If the system is configured to autosend results to the LIS, patient results will be transmitted regardless of the Quality Control status.

Using Single Rule QC

The Single Rule method uses a single measurement to determine if the control result is acceptable. The following formula is used to determine the acceptable range.

Range = Target Mean ± (Standard Deviation x Standard Deviation Multiplier)

To calculate the range for the single rule, perform the following steps:

1. Select **Use Single Rule**.

2. In the **Mean** field, enter the mean.
3. In the **SD** field, enter the standard deviation.
4. In the **SD Multiplier** field, enter the standard deviation multiplier.

   The SD Multiplier reflects the range for the standard deviation. The default is 2.
5. Select **Calculate Range**.

After the test is complete, the system evaluates the control result. If a control result is within range, the control printout displays:

```
Control passed all selected rules.
```

If the system is configured to autosend results to the LIS, patient results will be sent.

If a control result is outside of the range, the control printout displays:

```
Control failed rules.
```

The printout lists the rule that failed. If the system is configured to autosend results to the LIS, patient results will not be sent.

Using Multi Rule QC

Note When Multi Rule options are used, the control's range on QC reports is listed as N/A.

To improve control procedure performance, you may select up to the 5 Multi Rule options available. These rules work most efficiently when analyzing three control materials (or levels).

The rules are as follows:

Rule	Description
1 (2s)	This is the entry, or initial rule, and compares the QC value to a 2 SD control range. This rule warns you to initiate the evaluation of the control result using subsequent rule(s), if selected. If this rule fails, all other selected control rules are evaluated and reported.
1 (3s)	After a QC value exceeds the 1 (2s) rule, the system will compare it to a 3 SD control range, if selected. Failure of the 3 SD rule marks the assay out of control. If this rule passes, for example, result within 3 SD range, subsequent selected rule(s) are checked.

Rule	Description
2 (2s)	The 2(2s) rule checks for prior, consecutive control value exceeding ± the same 2 SD control range. Failure of this rule marks the assay as out of control. If this rule passes, subsequent selected rule(s) are checked. This rule is evaluated by looking at the most recent result obtained from the same control material, within the same control material.
R (4s)	If the range or span of the most recent, prior, consecutive control value compared to the current QC value exceeds 4 SD, the assay is marked as out of control. If this rule passes, the final rule, if selected, is checked.
4 (1s)	This rule fails when 4 consecutive control values exceed 1 SD on the same side (±) of the target mean. The assay will be marked as out of control. As with the 2 (2s) rule, this rule is evaluated historically across controls and within the same control material.

To utilize the rules, perform the following steps:

1. Select **Use Multi Rule**.
2. Under Use Multi Rule, select up to 5 rules.
3. In the Mean field, enter the mean.
4. In the SD field, enter the standard deviation.

Note The system supports the use of different control rules for each analyte, for example, the rules used for TSH may be different than the rules used for Estradiol.

After the test for the control sample is complete, the system evaluates the result. If a control result is within range for all the rules selected, the control printout displays:

```
Control passed all selected rules.
```

If a control result is outside of range for any of the selected rules, the control printout displays:

```
Control failed rules.
```

The printout lists which rule failed. Follow the laboratory procedures for an out-of-range control. The information regarding the failed rule may help determine the cause of the problem.

Editing a Control

Adding a Level

To add a level to an existing control in the QC Data Entry screen, perform the following steps:

1. Select **QC**.
2. Select **DATA ENTRY**.
3. From the **Name** list, select the control to which you want to add a level.
4. From the **Test Type** list, select the assay to which you want to add a control level.
5. Select **Add New Level**.

   The New Control Level window displays.
6. Enter the new level, and select **OK**.
7. At the upper right corner of the QC Data Entry screen, select one of the acceptance criteria options:
   - Control Not for On-Line QC
   - Use Single Rule
   - Use Multi Rule (not available for allergy controls)

   See *Acceptance Criteria*, page 4-6 for more information about the acceptance criteria.

Changing a Level

To change a level for an existing control in the QC Data Entry screen, perform the following steps:

1. Select **QC**.
2. Select **DATA ENTRY**.
3. From the Name list, select the control level to change.
4. From the Test Type list, select the assay for which to change the control level.
5. Select the test name and level in the **Tests Selected Level** field.

   Note You cannot change a control level to a level that already exists. For example, if a control for levels 4, 5, and 6 was entered, you cannot change level 6 to level 5.
6. Select **Change Level**.

7. Enter the new control level, and select **OK**.

   The message `By changing this level all control results for` *test name* `for the current level will be deleted. Do you want to continue?` displays; where *test name* is determined by the test selected in Step 5.

8. Select **Yes**.
9. To view tests and ranges for other controls, select **Previous Control** or **Next Control**.

Deleting Tests for a Control

To delete tests for a control, perform the following steps:

1. Select **QC**.
2. Select **DATA ENTRY**.
3. Select the down arrow in the **Name** field and select the control.
4. Select the down arrow in the **Test Type** field and select the appropriate assay.
5. Select **Delete Control**.
6. Complete the procedure:
   - To delete all tests for that control, select **Yes**.
   - To delete the highlighted test, select **No**, and select **Yes** to delete.

Qualitative Controls

To enter information about a qualitative control, follow the steps in the *Entering New Control Information*, page 4-4 and *Acceptance Criteria*, page 4-6, then perform the following steps:

Note You must enter each level of qualitative control as a separate control name in the QC Data Entry screen. The control name must be identical to the name printed on the control bar-code label.

1. Select **Add New Level**.

2. Based upon the information in the following tables, enter the level for the control record in the New Control Level window:

   For qualitative controls with 3 levels:

For this Level	Enter
Non-Reactive	1
Low Reactive	2
Reactive	3

   For qualitative controls with 2 levels:

For this Level	Enter
Non-Reactive	1
Reactive	2

3. Select **OK**.

Controls Reported as Ratios

Assay controls that report ratios require entry of the control ranges for the Mean and Standard Deviation. Preliminary values for the Mean and Standard Deviation are in the Instructions for Use (IFU) included with the controls.

As with qualitative control entry, you must enter each level of control as a separate control name in the Control Identification window. The control name must be identical to the name printed on the control bar-code label. Follow the steps for *Entering New Control Information*, page 4-4 and enter the control ranges from the IFU.

Editing Control Information

To edit existing control information, perform the following steps:

1. Select **QC** on the toolbar.
2. Select **DATA ENTRY**.

   The QC Data Entry screen displays.
3. In the **Name** field, select the control.
4. In the **Test Type** field, select the appropriate assay.
5. Select the test and level.

6. As needed, update the fields and change selections.
7. Select **Save**.

   Depending on the control identification data changed, a window may display confirming the change. All test types defined for that control are automatically updated.
8. To view other tests and ranges, select **Previous Control** or **Next Control**.

Reviewing Control Data

You can review control data by accessing a graph that plots data for different dates.

To review control data, perform the following steps:

1. Select **QC**.
2. Select **GRAPHS**.

   The Controls Graph window displays.

   Note When the range is 25 days or less, each date displays on the graph; otherwise, some dates are represented by points.
3. Select the **From** field, then select a date from the calendar.

   Note The To date default is today's date. As needed, you can change this field.
4. Select the **To** field, then select a date from the calendar.
5. From the pull down list to the right of the **To** field, select the test.
6. From the next pull down list to the right, select the control name.
7. From the next pull down list to the right, select the control level.
8. From the **Lot#** pull down list, select the lot.

   The Controls Graph window displays the plotted data points and the results used to plot the graph.

   The following list describes the content of the plotted graph portion of the screen:

   - Data points can be a square, a circle, or a triangle.
   - Data points of the same color are from the same Kit Lot.
   - Different colors indicate different Kit Lots.
   - Data points of the same color and shape indicate the controls were run on the same Kit Lot, with the same adjustment.

- Data points of the same color and a different shape indicate the controls were run on the same Kit Lot, with a different adjustment.

Note In the results portion of the screen:

- Results highlighted in pink are out of 4SD range and are not included in the graph.
- The Target SD (standard deviation) is based on the target mean entered in the QC Data Entry screen.

9. Sort data by selecting a column.

   For example, to sort the data by Z score, select the Z column.

10. For an explanation of the Controls Graph window, select **How to read this graph?**

11. To review details for an individual data point, perform the following steps:

    a. Move the pointer over the data point and right-select.

       The data corresponding to this data point displays in green on the Results portion of the screen and in a Point Info window.

    b. To remove this point from the graph, select **Yes**.

       See *Removing Points*, page 4-16.

       The Point Info window closes.

       - On the Results portion of the screen, the data corresponding to this point displays in red and the plus (+) sign changes to a minus (–) sign.
       - On the printout, a line through the result corresponds to the removed data point.

To copy the graph, print the graph, magnify a portion of the graph, eliminate the graph gridlines, or change the graph title, see the following table:

To:	Select:
Copy the graph	The camera button. **Note** You can paste the graph in the Microsoft Paint application and save it as a bitmap file. To access Microsoft Paint, perform the following steps: 1. On the Microsoft taskbar, select **Start**. 2. Select **Programs**, then select **Accessories**. 3. Select **Paint**.
Copy the data	The scissors button. **Note** You can paste the data and save it in another application (MS Word or MS Excel).
Print the graph	The printer button. ⚠ **CAUTION** Do not print graphs while the system is in RUN mode. If you attempt to print QC graphs while the system is performing tests, runtime errors may occur resulting in a loss of data.
Magnify part of the screen	The magnifier button. Select and drag the cursor over the area to magnify. **Note** To restore the screen to its original size, select the magnifier button again.
View the screen with the vertical grid lines	The vertical lines button. **Note** To remove the grid lines, select the vertical lines button again.

To:	Select:
View the screen with the horizontal grid lines	The horizontal lines button. **Note** To remove the grid lines, select the horizontal lines button again.
Change the graph titles	The graph edit button. In the Titles window, create / change the titles to display by doing the following: • In the Top field, enter the title for the top of the graph. • In the Left field, enter the title for the left of the graph. • In the Right field, enter the title for the right of the graph. • In the Bottom field, enter the title for the bottom of the graph.

Adding Comments

To add a comment to a result on the Controls Graph screen, perform the following steps:

1. At the Controls Graph screen, select the **Comment** field for a particular line of data.

   A Comment Selection window displays.

2. Select a comment.

   The comment displays in the Comment field.

Creating Comments

When none of the available comments are appropriate, create a comment by doing the following:

1. At the Controls Graph screen, select **Edit Comments List**.
2. Select a place in the **Comments List** for the new comment.
3. Select **Add New to List**.

   New Comment displays in the window to the left of CLOSE.

4. Overwrite “New Comment” with the new comment.

Note Enter alphanumeric characters only.

The new comment displays in the Edit Comments List window, above the original highlighted comment.

Note To remove a comment from the list, highlight the comment and select **Remove from List**.

5. To close the Edit Comments List window, select **CLOSE**.

Removing Points

An invalid result can be removed so it is not included in the graph.

At the Controls Graph screen, select the plus sign (+) to the left of the control result to be removed.

The data corresponding to this result changes color and the plus sign (+) becomes a minus sign (–), indicating this result is not included in the controls graph.

The graph changes to reflect the change in data, the n value is updated, and the Actual Mean, SD, and CV (%) figures are recalculated.

Note To include data previously removed, select the minus sign (–) to the left of the result. The minus sign (–) becomes a plus sign (+), the actual calculations are updated, and the graph is updated to reflect the new data.

Scheduling QC Assays for the IMMULITE 2000 XPi

Note This section refers to the IMMULITE 2000 XPi system only.

The IMMULITE 2000 XPi AutoStart feature allows you to schedule the system to perform quality control assays when you select **Run AutoStart** or when a scheduled AutoStart occurs. You can also define selected QC assays for selected days of the week.

This section describes the following procedures:

- Adding or editing a QC worklist to the schedule
- Adding or editing a control to a QC worklist
- Scheduling a QC worklist
- Copying a QC worklist
- Deleting a worklist

Adding a QC Worklist

Note Controls must be defined on the system before you can create a worklist.

To add a new QC worklist, perform the following steps:

1. At the Menu screen, select **Scheduled QC**.
2. At the Scheduled QC screen, select **ADD**.
3. At the Scheduled QC – QC Worklist Entry screen, enter a name for the new worklist in the **QC Worklist Name** field.
4. Select **Add Control**.
5. At the QC Control Entry window, select a control from the **Control Name** dropdown list.
6. Ensure that the appropriate control level and control lot are selected.
7. Select **TEST SELECTION**.

   The system displays the Scheduled QC – AVAILABLE TESTS screen.
8. Select the tests to include with the control on this worklist.
9. Select **OK**.
10. At the QC Control Entry window, set dilutions as necessary, then select **Accept**.
11. Repeat steps 4 through 10 for each control you want to add to the QC worklist.
12. To save the worklist, select **Save**.

Adding a Control to a QC Worklist

To add a control, perform the following steps:

1. At the Menu screen, select **Scheduled QC**.
2. At the Scheduled QC screen, select the appropriate worklist from the Worklist Name dropdown list.
3. Select **EDIT**.
4. At the Scheduled QC – QC Worklist Entry screen, select **Add Control**.
5. At the QC Control Entry window, select a control from the Control Name dropdown list.
6. Use the appropriate dropdown lists to select the control level and the control lot.
7. Select **TEST SELECTION**.
8. At the AVAILABLE TESTS window, select the test to add.
9. Select **OK**.

10. At the QC Control Entry window, select **Accept**.

    The new control displays in the QC worklist.

11. To save changes, select **Save**.

Editing a Control in a QC Worklist

To edit a control, perform the following steps:

1. At the Menu screen, select **Scheduled QC**.
2. At the Scheduled QC screen, select the appropriate worklist from the **Worklist Name** drop down list.
3. Select **EDIT**.
4. At the Scheduled QC – QC Worklist Entry screen, select the control to edit.
5. Select **Edit Control**.
6. At the QC Control Entry window, make the necessary changes to the displayed control.
7. At the QC Control Entry window, select **Accept**.
8. To save changes, select **Save**.

Scheduling a QC Worklist

To schedule a QC worklist, perform the following steps:

1. Select **MENU**.
2. At the Tools panel, select **Scheduled QC**.

   The **Worklist Name** dropdown list is blank until you add a QC worklist. The worklist displays in the worklist table:

   - Select the **Samples** tab to view the worklist by the control name.
   - Select the **Orders** tab to view the worklist by individual test order.
3. At the QC Worklist Display window of the Scheduled QC screen, select **SCHEDULE**.

   The Scheduled QC screen displays worklists that are currently scheduled. You can use the Day of week dropdown list to display schedules for each day or select **ALL** to display the entire week.
4. Select **Add**.
5. At the Schedule QC Worklist window, select the QC Worklist Name you want to schedule.
6. At the Schedule Type dropdown list, select the schedule type:
   - Immediate
   - Day/Time
   - AutoStart
7. If you selected AutoStart:
   a. Select one or more days to schedule the selected worklist.
   b. Select **OK**.
8. If you selected Day/Time:
   a. Select the day of the week.
   b. Select the time of day.
   c. Select **OK**.

   QC Worklist Display of the Scheduled QC screen displays the added worklist schedule.
9. If you selected Immediate:
   a. Select **OK** to immediately order tests from the selected QC worklist.

      The system displays a message asking if you want to immediately order tests from that QC worklist.

b. Select **Yes**.

You can view the tests ordered from the selected QC worklist in the Worklist Display/Edit screen. See *Displaying a Worklist*, page 2-57.

10. Select **Close**.

Copying a QC Worklist

If you want to create a worklist that is similar to another worklist, you could copy a worklist and modify it as necessary.

To copy a worklist, perform the following steps:

1. At the system window, select **MENU**.
2. In the Tools panel, select **Schedule QC**.
3. At the QC Worklist Display screen, select the worklist you want to copy.
4. Select **COPY**.
5. At the New QC Worklist Name screen, enter the name for the new worklist.
6. Select **Save**.

   The QC Worklist Display screen displays the new name for the selected worklist. You can now customize the new worklist.

Deleting a Worklist

If you want to delete a worklist you first must delete all occurrences of the worklist in the Scheduled QC.

To delete a worklist, perform the following steps:

1. Select **MENU**.
2. Select **Scheduled QC**.
3. Select **SCHEDULE**.
4. Delete each occurrence of the worklist:
   a. Select an occurrence.
   b. Select **Delete**.
   c. Repeat these steps until all occurrences of the worklist are deleted.
5. Select **Close**.
6. At the QC Worklist Display window, use the Worklist Name dropdown list to select the worklist you are deleting.

7. Select **DELETE**, and the system displays:

   ```
   Do you want to delete this QC Worklist?
   ```

8. Select **Yes**.
9. To exit the QC Worklist Display screen, select **CLOSE**.

5 Performing Maintenance

AutoStart Maintenance (IMMULITE 2000 XPi System) . . . 5-1

Preparing to Run AutoStart 5-2
Manual AutoStart 5-2
AutoStart Configuration 5-2
AutoStart Countdown 5-2
AutoStart Monitor 5-3

IMMULITE 2000 Daily Maintenance 5-3

Logging Off the System 5-3
Initializing Diagnostics 5-4
Cleaning the Sample and Reagent Probes 5-5
Exiting the Diagnostics Program 5-6
Restarting the Computer 5-6
Starting the IMMULITE 2000/2000 XPi Systems 5-6
Checking the Status Indicators 5-7
Filling the Reaction Tube Hopper 5-7
Checking and Filling the Water Bottle 5-8
Checking and Filling the Probe Wash 5-8
Checking and Filling the Substrate 5-9
Checking the Waste Containers 5-10
Solid Waste 5-10
Liquid Waste 5-11
Priming the Sample and Reagent Pipettors 5-12
Priming the Water Probe 5-13
Priming the Substrate Probe 5-14

Weekly Maintenance 5-15

Cleaning the Waste Tube 5-15
Performing the Probe Angle Diagnostic for the IMMULITE 2000 XPi System 5-16

Monthly Maintenance 5-16

Decontaminating the Bottles and Lines 5-17
Decontaminating the Bottles 5-17
Decontaminating the Lines 5-19
Decontaminating the Clot Detection Transducer 5-20
Checking the Dispense Angle of the Reagent Probe 5-21
Cleaning the Fan Filter 5-21

Water TestPM 5-24
Performing Water TestPM 5-25
Evaluating Water TestPM Results 5-27
Quarterly Maintenance 5-27
Replacing the CO_2 Scrubber 5-27
Substrate Reservoir Maintenance 5-28
As Needed Maintenance 5-29
Cleaning the Monitor 5-29
Cleaning the Trackball 5-29
Maintaining the Sample Racks 5-29
Replacing Sample Rack Labels 5-29
Direct Water Feed System Routine Maintenance 5-29
Flushing Procedure 5-30
Water Test Procedure 5-30
Evaluating WATERTEST Results 5-32
Worksheets 5-32
IMMULITE 2000 Systems Adjustment Log 5-33

Performing Maintenance

For images of the IMMULITE 2000 system, see the following figures:

- *IMMULITE 2000 System (Overhead View)*, page 1-8
- *IMMULITE 2000 System (Front View)*, page 1-9

For images of the IMMULITE 2000 XPi system, see the following figures:

- *IMMULITE 2000 XPi System (Overhead View)*, page 1-10
- *IMMULITE 2000 XPi System (Front View)*, page 1-11

For maintenance records that you can copy and use to keep track of maintenance items, see *Worksheets*, page 5-32.

AutoStart Maintenance (IMMULITE 2000 XPi System)

You may perform daily maintenance tasks as listed in *IMMULITE 2000 Daily Maintenance*, page 5-3, or you can use AutoStart maintenance for the IMMULITE 2000 XPi only.

Note For AutoStart to begin, the system must be in STOP mode or logged off. When connected to a VersaCell, the system can be in RUN mode if there are no tests processing.

AutoStart starts the following routine maintenance tasks automatically:

- Restarts the computer.

  This is only when the system is running for more than 24 hours.
- If necessary, starts and initializes the system.
- Runs probe clean routine.
- Primes system water and wash stations.
- Runs scheduled control samples (optional).

Note To run the QC Worklist, you must manually prime the substrate or program it for auto dispense. To access information about scheduling controls, see *Scheduling a QC Worklist*, page 4-19. To access information about programming the system for auto substrate dispense, see *AutoStart Configuration Screen (IMMULITE 2000 XPi System)*, page 8-23.

Preparing to Run AutoStart

To prepare for AutoStart, perform the following steps:

1. Load a 12 x 75 mm sample tube containing 1.5 mL of probe cleaning solution with barcode label "~Probe Clean" onto the sample rack.

   Note For pipetting the probe cleaning solution into the sample tube, follow the Instructions For Use (IFU).

2. Ensure the consumables are full.
3. On the system, load control materials if running a scheduled QC worklist as part of AutoStart.
4. Prime the substrate probe.

Manual AutoStart

Use the manual AutoStart feature to begin processing routine tasks when the system is in STOP mode or logged off.

To perform a manual AutoStart, at the Startup screen or Menu screen, select **Run AutoStart**.

- If you run AutoStart from the Startup screen, the system displays the confirmation message `Are you sure you want to launch AutoStart?`.
- If you run AutoStart from the Menu screen, the system displays the confirmation message `Do you want to begin AutoStart processing?`

Select **Yes** to continue or **No** to cancel AutoStart processing.

AutoStart Configuration

The AutoStart Configuration screen allows you to schedule automated maintenance procedures by day and time, and enable or disable automatic substrate dispensing. See *AutoStart Configuration Screen (IMMULITE 2000 XPi System)*, page 8-23.

AutoStart Countdown

Five minutes before an AutoStart is scheduled, the AutoStart Countdown window displays a countdown of time remaining before the system automatically begins processing.

You can allow the countdown to proceed or select one of the following options:

- To begin processing immediately, select **Start Now**.
- To stop the system from automatically processing, select **Cancel**.

AutoStart Monitor

After the system begins processing automatically, the AutoStart Monitor window displays. A progress bar displays the status and the specific task currently running.

To discontinue automatic processing, select **Abort**.

Note Selecting Abort may not stop the procedure. The AutoStart procedure may be at a point in the procedure where it must continue to the end.

IMMULITE 2000 Daily Maintenance

Perform the following required maintenance procedures daily.

Logging Off the System

Logging off the system each day automatically initiates a system back-up, which stores current data. This process optimizes software performance and allows recent data to be restored in the event of a serious system error.

Note Put the system in STOP mode before logging off. Failure to do so may cause the final reagent and bead test counts to be inaccurately stored.

1. Select **STOP**.

   Note If active tubes are in progress, a message displays stating the time-to-completion. Select the appropriate button to either cancel or continue the log-off process.

2. If you are logging off for an extended period, perform these steps:
   a. Remove patient samples, controls, diluent, and adjustors from the sample carousel.
   b. Remove any allergen wedges from the reagent carousel and seal the allergen vials with standard caps before storing them.

3. Select **LOG OFF**.

   The following message displays:

   ```
   Would you like to Log Off of the (IMMULITE 2000 or
   IMMULITE 2000 XPi) software and return to the
   Start-Up menu?
   ```

4. Select **OK**.

   The following message displays:

   ```
   Preparing to Back up Files...Please Wait

   You are about to delete all patient records over 62
   days and control, verifier and adjustor records
   over 366 days.
   ```

   Note Selecting **CHANGE DAYS** to increase the number of days data is stored may slow the system response time.

5. Select **CONTINUE**.

   The system logs off.

Initializing Diagnostics

Note To carry out weekly maintenance procedures, the system must be in diagnostics.

To initialize the diagnostic software, perform the following steps:

1. At the Windows desktop, double-select the **Diagnostics** icon.
2. After the system initializes, select **Condensed Run Program**.

   The Load Program screen displays. See *Diagnostic Program Descriptions*, page 6-14.

   Note Home All Motors is performed by each diagnostic, and is included for reference.

3. For the IMMULITE 2000, select **Cover Unlock – 2000**.
4. Select **RUN**.

   The cover unlocks automatically during the daily probe cleaning diagnostic.

5. Lift the cover.
6. To load the list of diagnostics, select **Load Program**.
7. Run the appropriate diagnostic.

Cleaning the Sample and Reagent Probes

To clean the Sample and Reagent Probes, perform the following steps:

Note A Probe Cleaning Kit (part number L2KPM) is required to complete these instructions. This procedure maintains optimal performance of the probes and prevents carryover.

CAUTION
Do not insert anything into the probe. Permanent damage may occur.

1. If necessary, initialize diagnostics. See *Initializing Diagnostics*, page 5-4.
2. Select one of the following options:
   - **Daily Probe Cleaning – 2000**
   - **Daily Probe Cleaning – 2000 XPi**
3. Select **RUN**.

   This homes all motors, unlocks the cover, and initializes the diagnostics.
4. After the cover unlocks, lift it.
5. Load a 12 x 75 sample tube containing 1.5 mL of probe cleaning solution onto the sample rack in position 1-1.
6. Place an empty reaction tube in the shuttle.
7. To continue, select **Lift Cover, Place an Empty Reaction Tube on the Shuttle**.

   The system takes 10 minutes to complete probe cleaning.
8. Select **Lift the Cover and Press to Observe Dispense Angle**.
9. Observe the liquid that is dispensed from the sample probe.

   It should be a straight, solid stream into the blind hole. If not, you may need to replace the sample probe.
10. To end this diagnostic, select **PRESS TO STOP DISPENSE**.
11. After the screen displays the `Program Complete` message, verify that the sample probe does not touch the inside wall of the blind hole.
12. Remove the sample tube from the system and discard the probe cleaning solution.

    Note The system automatically removes the reaction tube.

13. To continue running diagnostics, select **Load Program**, then load the appropriate diagnostic.
14. To stop running diagnostics, select **EXIT**, then select **QUIT**.

Exiting the Diagnostics Program

1. If necessary, select **Stop**.
2. Select **Exit**.

   The Diagnostics main menu displays.
3. Select **QUIT**.

Restarting the Computer

To restart the computer, perform the following steps:

Note The steps are slightly different depending on the computer's operating system (Windows NT or Windows XP).

1. On the lower-left corner of the screen, select **Start**.
2. Select **Shut Down** or **Turn Off Computer**.
3. Select **Restart the computer?**, then select **Yes** or **Restart**, depending on which prompt displays.

   Note Press **CTRL**, **Alt**, and **Delete** keys simultaneously if prompted by the software after the computer restarts.
4. Press **Enter** at the Log on Information window.

   A password is not required.

Starting the IMMULITE 2000/2000 XPi Systems

Note During initialization, the cover must be closed.

1. At the startup, select **Run IMMULITE 2000** or **Run IMMULITE 2000 XPi**.

   During initialization, the following message displays:

   ```
   Would you like to delete the worklist and all the
   un-resulted records?
   ```

   a. To delete the un-resulted records, select **Yes**.

   b. To continue without deleting the un-resulted records, select **No**.
2. When system initialization completes, select **OK**.

   The Home screen and the toolbars display.

3. If you run allergen assays, perform the following steps:
   a. Scan any allergen wedges that changed.

      When scanning an allergen wedge, the Allergen Wedge Detail window displays.

   b. Confirm that the information is correct, then select **OK**.

      See *Replacing Reagent Wedges*, page 2-16.

Checking the Status Indicators

At the system screen, check the status indicator on the vertical toolbar and refill or empty reservoirs as necessary. The status indicator is located at the bottom of the vertical toolbar at the system screen. The indicator displays the status of empty and full levels.

Filling the Reaction Tube Hopper

When the reaction tube hopper is empty, the system goes into PAUSE mode automatically. To fill the reaction tube hopper, perform the following steps:

1. Open the front cabinet doors.
2. Grasp the reaction tube hopper handle and swing it towards you.
3. Fill the reaction tube hopper.

   Note Reaction tubes are single use only. Dispose of after each use. Do not fill above the tube hopper fill-level mark.

Figure 5-1: Filling the Reaction Tube Hopper

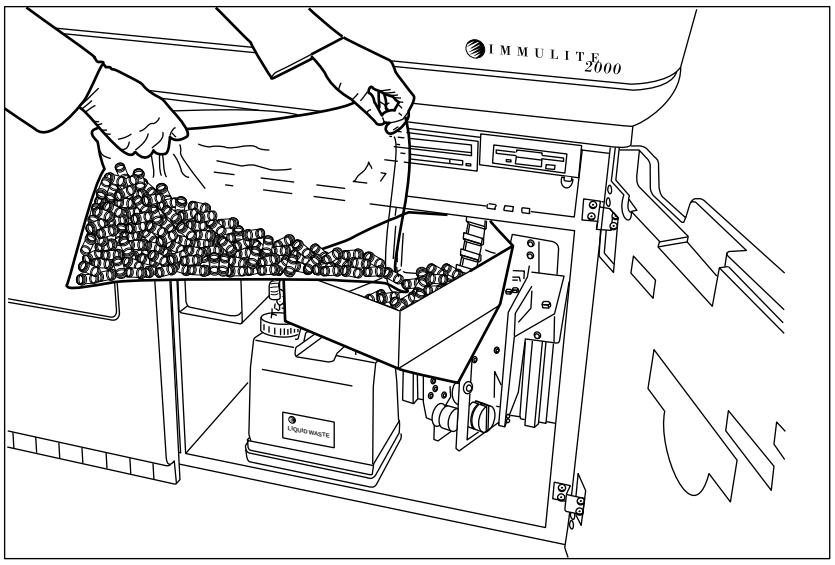

4. Swing the hopper back into place until it clicks.
5. Close the front cabinet doors or continue performing maintenance.

Checking and Filling the Water Bottle

Check the status indicator. If the water bottle needs to be filled, perform the following steps:

1. Open the front cabinet doors.
2. Locate the water bottle.
3. Pull the water bottle forward until the screw cap at the front of the bottle is accessible.

   The bottle remains seated on the load scale, held in place by the molded notch on the bottom of the bottle that engages the front edge of the load scale platform.

   Note Do not disconnect the tubing from the valve at the back of the water bottle while the system is in RUN mode. For detailed instructions on disconnecting the water bottle, see *Decontaminating the Bottles*, page 5-17.
4. Unscrew the cap and fill the water bottle with distilled or de-ionized water from a clean container.
5. Replace the cap and gently slide the water bottle back into place until it is seated properly on the load scale.
6. Ensure that the tubing is not constricted so that water can flow freely.
7. Close the front cabinet doors or continue performing maintenance.

Checking and Filling the Probe Wash

Check the status indicator. If the probe wash bottle needs to be filled, perform the following steps:

1. If needed, prepare 2 L of probe wash solution by adding a 200-mL bottle of probe wash concentrate to 1800 mL of water.
2. Open the front cabinet doors.
3. Locate the probe wash bottle.

   Note Do not disconnect the tubing from the valve at the back of the probe wash bottle while the system is in RUN mode. For detailed instructions about disconnecting the probe wash bottle, see *Decontaminating the Bottles*, page 5-17.
4. Unscrew the cap and fill with probe wash.

5. Replace the cap and gently slide the probe wash bottle back into place until it is seated properly on the load scale.
6. Ensure that the tubing is not constricted so that probe wash can flow freely.
7. Close the front cabinet doors or continue performing maintenance.

Checking and Filling the Substrate

Check the status indicator. If the substrate reservoir needs to be filled, perform the following steps:

CAUTION

Do not leave substrate on the instrument for more than 30 days. Leaving substrate on the instrument for more than 30 days could affect results.

Note Do not overfill the substrate bottle. The indicator strip on the substrate bottle displays the substrate level.

1. Allow the substrate to reach room temperature.

   Remove the substrate from the refrigerator 20 minutes before using. For more information, see the IFU.
2. Open the cover over the Dual Resolution Dilutors (DRD) priming accessories and locate the substrate reservoir.
3. Lift the tab on the substrate reservoir.

WARNING

Do not fill the substrate reservoir beyond the maximum capacity of 1000 tests. Filling the substrate reservoir beyond the maximum capacity may cause substrate to enter the CO_2 scrubber and cause a blockage. This can result in damage to the system and possible misreporting of results.

4. Pour the appropriate amount of substrate from the refill bottle into the substrate reservoir.

   Do not exceed the 1000 tests mark.

Figure 5-2: Filling the Substrate

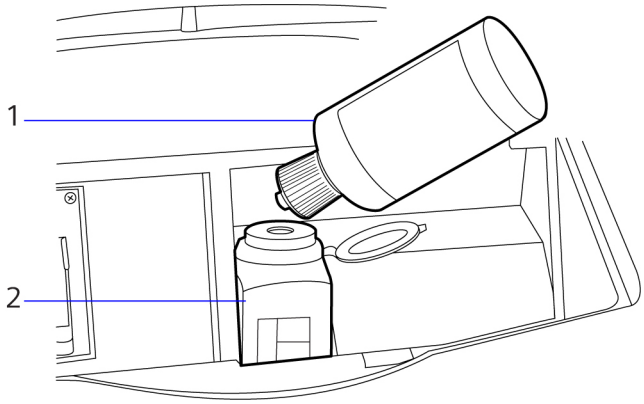

1. Substrate Refill Bottle
2. Substrate reservoir

5. Close the tab on the substrate bottle and close the cover.

CAUTION

Do not leave substrate spills on the load scale. Spilled substrate may cause the load scale to stick and the substrate status indicator to appear full when the substrate reservoir is empty. This could affect results. Immediately clean up any substrate spills using moistened tissues.

Checking the Waste Containers

The system has a solid waste and a liquid waste container. Check the status indicator. If the solid or liquid waste needs to be emptied, perform the following steps:

Solid Waste

BIOHAZARD

Wear personal protective equipment. Use universal precautions. Refer to *Safety Instructions*, page A-1 for recommended precautions when working with biohazardous materials.

To empty the solid waste, perform the following steps:

1. Open the front cabinet doors.

2. Locate the solid waste container.
3. Remove the solid waste container and flip back the tube deflector.
4. Remove the biohazard bag filled with used reaction tubes and dispose the bag into a biohazard container.
5. Put a new biohazard bag (Part Number 10-901807) in the solid waste container, spreading out the bag so it lays against the sides of the container.
6. Ensure the bag is fully opened so the used reaction tubes can drop to the bottom of the container.
7. Flip the tube deflector forward and replace the container in the system, with the deflector at the back end.
8. Close the front cabinet doors or continue performing maintenance.

Liquid Waste



BIOHAZARD

Wear personal protective equipment. Use universal precautions. Refer to *Safety Instructions*, page A-1 for recommended precautions when working with biohazardous materials.

To empty the liquid waste, perform the following steps:

1. Open the front cabinet doors.
2. Locate the liquid waste bottle.
3. To release the valve, push the dark gray button with one hand while pulling the tube out with the other hand.

4. Remove the liquid waste bottle.

Figure 5-3: Disconnecting the Liquid Waste Bottle

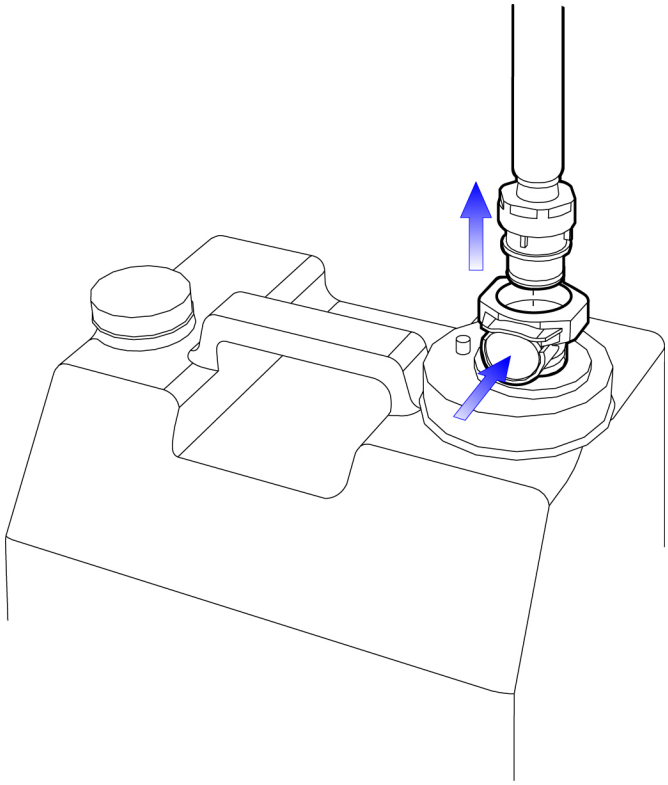

Note Do not pour waste from the gray connection. To empty the waste, open the white cap.

5. Empty the liquid waste bottle, then place it on the system.
6. To reconnect the liquid waste bottle, insert the valve at the end of the waste line tubing until it clicks into place.

WARNING

Ensure that the valve clicks into place. If it does not click into place, liquid waste could back up in the waste tubing and overflow onto the floor.

7. Close the front cabinet doors or continue performing maintenance.

Priming the Sample and Reagent Pipettors

Note Priming the sample and reagent pipettor is part of the AutoStart maintenance procedures for the IMMULITE 2000 XPi system.

Note The system must be in STOP mode to open the cover. If necessary, select **STOP** before proceeding with the following instructions.

To prime the sample and reagent pipettors, perform the following steps:

1. To release the lock, select **COVER**.
2. Raise the main cover.
3. Press the green **PRIME** button until priming starts.

   Alternatively, select **PRIME** on the monitor instead of the green PRIME button.
4. Continue priming until no bubbles are in the dual resolution dilutors or the tubing.

Figure 5-4: Priming the Sample and Reagent Pipettors

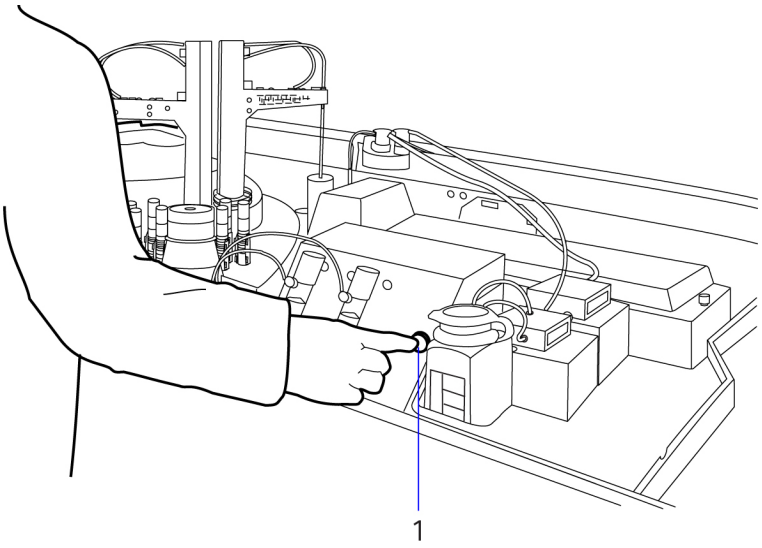

1. PRIME button

Priming the Water Probe

Note On the IMMULITE 2000 systems, you must prime the water probe separately.

To prime the water probe on the IMMULITE 2000 systems, perform the following steps:

WARNING

Do not lift the water probe unless your hands are clear of the reagent pipettor drain. The reagent pipettor automatically moves away from the reagent pipettor drain when the water probe is lifted.

1. Remove the water probe from the bead/tube wash station.

2. Hold the water probe over the reagent pipettor drain.

Figure 5-5: Priming the Water Probe

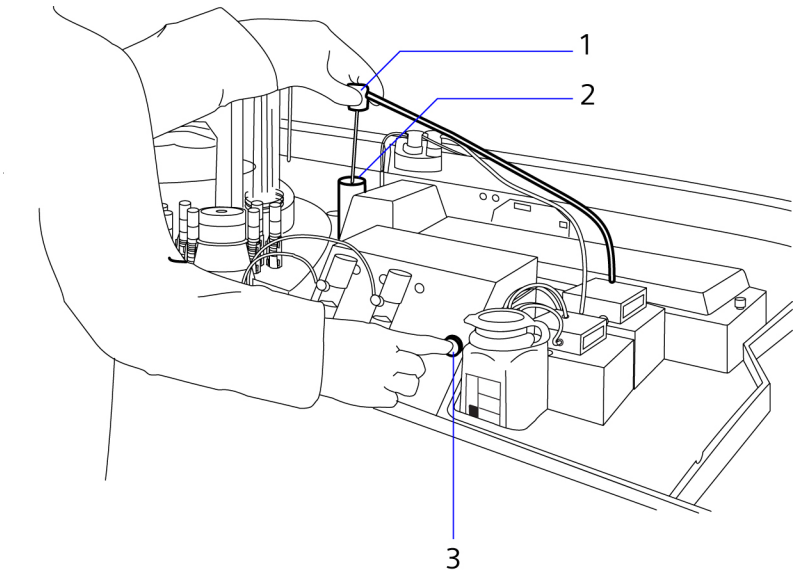

1. Water probe
2. Pipettor drain
3. PRIME button

3. Press and release the green **PRIME** button.

   The pump primes 4 times.

4. Continue to prime until you observe a steady stream of water and no air in the tubing.
5. Allow the priming sequence to complete, then place the water probe back into the bead/tube wash station.
6. Ensure the probe is fully seated.

   The reagent pipettor moves back to its original position.

Priming the Substrate Probe

To prime the substrate probe, perform the following steps:

CAUTION
Do not insert anything into the probe. Permanent damage may occur.

1. Remove the substrate probe from its holder next to the bead/tube wash station.

2. Check for white precipitate at the end of the substrate nozzle.

   If necessary, gently wipe the nozzle with a lint-free, dry tissue.

3. Hold the substrate probe over a clean beaker or other external container.

   Note Do not prime the substrate probe into the reagent pipettor drain.

4. Press and release the green **PRIME** button.

   The pump primes 4 times.

5. Continue to prime until you observe a steady stream of substrate and no air in the tubing.

6. Place the substrate probe back into its holder.

Weekly Maintenance

Perform the following maintenance procedures weekly. For maintenance records that you can copy and use to keep track of maintenance items, see *Worksheets*, page 5-32.

Note To carry out weekly maintenance procedures, the system must be in diagnostics.

Cleaning the Waste Tube

To clean the liquid waste tube, perform the following steps:

1. If necessary, initialize diagnostics.

   See *Initializing Diagnostics*, page 5-4.

2. Select **Waste Tube Cleaning - 2000**.

3. Select **RUN**.

4. When the program is finished initializing, place a sample tube with 3 mL of probe cleaning solution into position 1 of the sample rack.

5. Add 3 mL of probe cleaning solution to compartment A of the probe cleaning wedge and place the wedge into position 1 of the reagent carousel.

6. Select **Press When Sample Tube and Reagent Wedge are Loaded**.

7. Allow the program to complete its running cycle.

   Approximate time to completion is 20 minutes. Program Complete displays on the screen.

8. To continue running diagnostics, select **Load Program** and load the appropriate diagnostic.
9. To stop running diagnostics, select **EXIT**, then select **QUIT**.

Performing the Probe Angle Diagnostic for the IMMULITE 2000 XPi System

Note If you are using AutoStart on your IMMULITE 2000 XPi system, perform this procedure weekly.

To check the sample probe angles, perform the following steps:

1. If necessary, initialize diagnostics.

   See *Initializing Diagnostics*, page 5-4.
2. Select **Sample Probe Angle**, then select **RUN**.
3. To begin, at the monitor, select **Press to Dispense Water**.
4. Visually check the liquid the sample probe is dispensing.

   It should be a straight solid stream. If not, see *Using Diagnostic Programs*, page 6-13.
5. To end the test, at the monitor, select **Press to Stop**.
6. To close the sample probe angle diagnostic program, select **EXIT**.
7. To exit Diagnostics, select **Quit**.

Monthly Maintenance

Perform the following maintenance procedures monthly. For maintenance records that you can copy and use to keep track of maintenance items, see *Worksheets*, page 5-32.

Note To carry out monthly maintenance procedures, the system must be in diagnostics.

Decontaminating the Bottles and Lines

To clean the probe wash bottle, water bottle, and lines, perform the following steps:

Obtain the materials needed to decontaminate the bottles and lines:

- Empty beaker
- Decontamination bottles (included with system)
- 350 mL of probe wash (prepared 10X dilution) or 0.1M NaOH
- Fresh distilled/de-ionized water
- 70% isopropyl alcohol

Decontaminating the Bottles

To decontaminate the water or probe wash bottles, perform the following steps:

Note Do not disconnect the tubing while the system is in RUN mode.

1. To release the valve and remove the tubing, press the silver button.

2. Remove the bottle from the system.

Figure 5-6: Disconnecting the Water Bottle

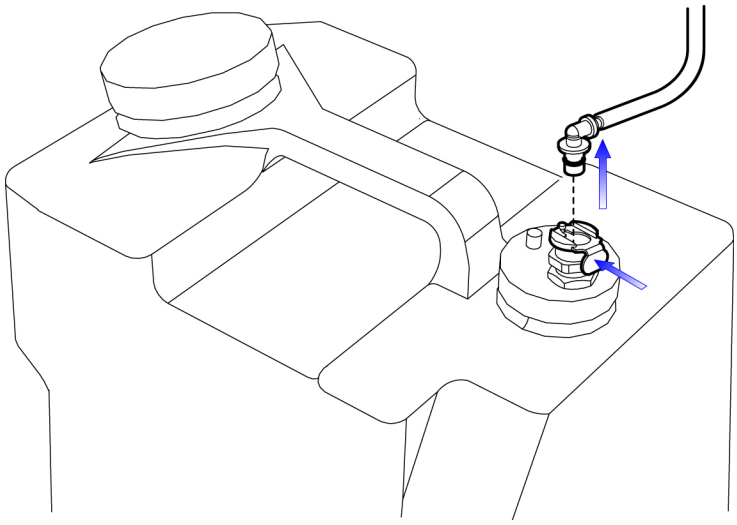

Figure 5-7: Disconnecting the Probe Wash Bottle

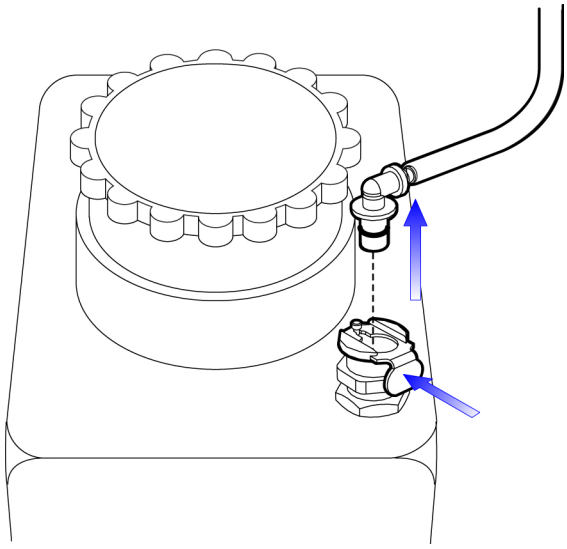

3. To decontaminate the probe wash and water supply bottles, thoroughly rinse their insides with 70% isopropyl alcohol.
4. Rinse well with distilled or de-ionized water.
5. Let dry until ready to use.
6. Check the in-line filters for a change in color due to metals or contaminants in the water.

7. If the in-line filter has changed color, replace the in-line filter and the hydrophobic filter plug.
8. Refill the water bottle with fresh distilled or de-ionized water.
9. Refill the probe wash bottle with freshly prepared probe wash.
10. Reconnect the bottle by inserting the valve at the end of the tubing until it clicks into place.

Decontaminating the Lines

Note Do not use alcohol to decontaminate the water and probe wash lines. Use alcohol only to clean bottles.

1. If necessary, initialize diagnostics.

   See *Initializing Diagnostics*, page 5-4.

2. Select **Decontamination - 2000**, then select **RUN**.

   A prompt displays:

   ```
   Place the water probe into the reagent pipettor
   drain.
   ```

3. Remove the water probe.
4. After the water probe is removed from the bead/tube wash station, the following prompt displays:

   ```
   Disconnect water and probe wash lines. Place them
   into an empty beaker. Press button when ready.
   ```

   Note For detailed instructions on disconnecting the probe wash and water bottles, see *Decontaminating the Bottles*, page 5-17.

5. Complete the prompt instructions, then select the **Press to Continue** button.

   The pumps empty.

6. When the prompt `Please Connect The Water And Probe Wash Supply Lines to the Decontamination Fluid Container` displays, connect the water and probe wash lines to the decontamination bottle containing 350 mL of prepared probe wash (or use 0.1M NaOH).
7. Select **Press to Continue**.

   Probe wash is pumped through the lines. The following prompt displays:

   ```
   Disconnect water and probe wash lines. Place them
   into an empty beaker. Press button when ready.
   ```

8. Complete the prompt instructions, then select **Press to Continue**.

   The pumps empty and the following prompt displays:

   ```
   Please connect the Water and Probe Wash lines to
   the bottles. Press button when ready.
   ```

9. Follow the instructions, then select **Press to Continue**.

   The system primes the water and probe wash into the lines.

10. Select **Replace Water Probe** when prompted.

11. To continue running diagnostics, select **Load Program**, then load the appropriate diagnostics.

    Program complete displays.

12. To stop running diagnostics, select **EXIT**, then select **QUIT**.

13. Close the front cabinet doors.

Decontaminating the Clot Detection Transducer

To decontaminate the clot detection transducer, perform the following steps:

1. If necessary, initialize diagnostics.

   See *Initializing Diagnostics*, page 5-4.

2. Select **Transducer Decon - 2000** or **Transducer Decon - 2000 XPi**.

3. Select **RUN**.

   Follow the prompts on the screen. At the prompt, place a 12 x 75-mm sample tube with 2.5 mL of 0.1M sodium hydroxide (NaOH) in position 1.

   Note Use only NaOH for this procedure.

4. Place the tube in position 1 of the sample rack.



BIOHAZARD

Wear personal protective equipment. Use universal precautions. Refer to *Safety Instructions*, page A-1 for recommended precautions when working with biohazardous materials.

5. After the tube is in place, select **Press to Continue**.

   Watch the prompts. The `Program Complete` prompt indicates when the program is finished.

6. To continue running diagnostics, select **Load Program**, then load the appropriate diagnostic.

7. To stop running diagnostics, select **EXIT**, then select **QUIT**.

Checking the Dispense Angle of the Reagent Probe

To check the reagent probe dispense angle, perform the following steps:

1. If necessary, initialize diagnostics.

   See *Initializing Diagnostics*, page 5-4.

2. Select one of the following options:
   - **Reagent Probe Dispense Angle – 2000**
   - **Reagent Probe Dispense Angle – XPi**
3. Select **RUN**.
4. To begin, select the **Press to Dispense Water** button.
5. Observe the liquid that is dispensed from the reagent probe.

   It should be a straight, solid stream.
6. Select the **Press to End Program** button.
7. To continue running diagnostics, select **Load Program** and load the appropriate diagnostic.
8. To stop running diagnostics, select **EXIT**, then select **QUIT**.

Cleaning the Fan Filter

To clean the Fan Filter, perform the following steps:

1. If needed, move the monitor out of the way.
2. Open the cover.

3. Press down on the side door panel screw while turning to release the screw.

Figure 5-8: The Side Door Panel Screw (IMMULITE 2000 System)

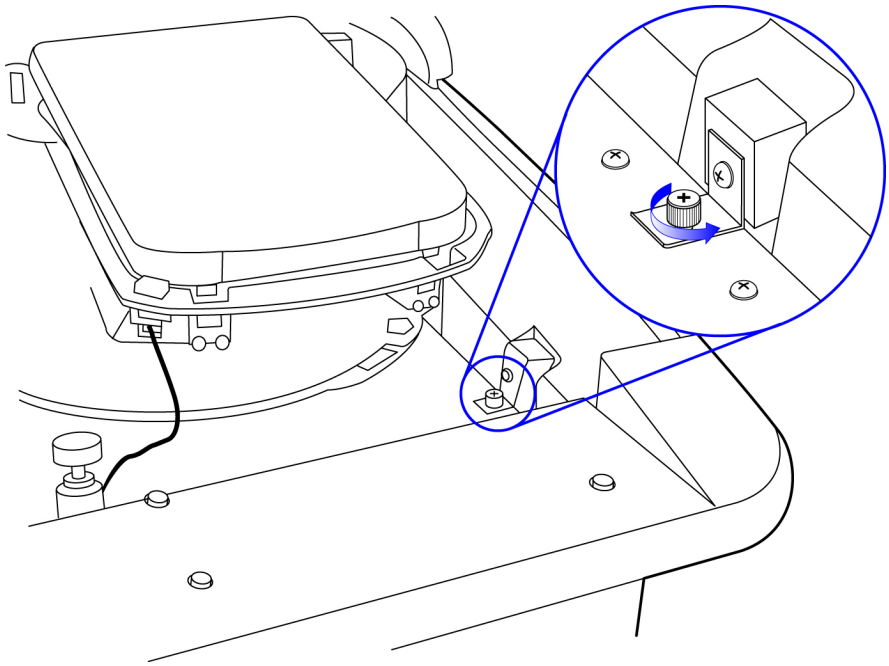

4. Pull the side door panel open.

   The door is held in place magnetically and opens easily.

Figure 5-9: The Side Door Panel

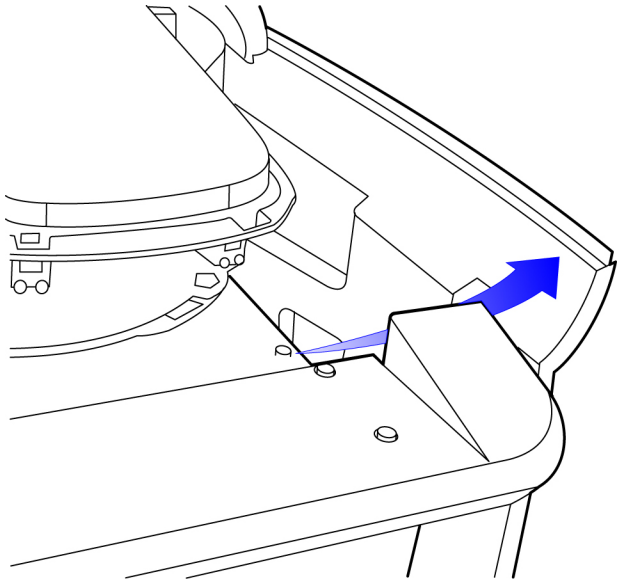

5. To remove the fan filter guard, unscrew the top and bottom screws.

Figure 5-10: Removing the Fan Filter Guard

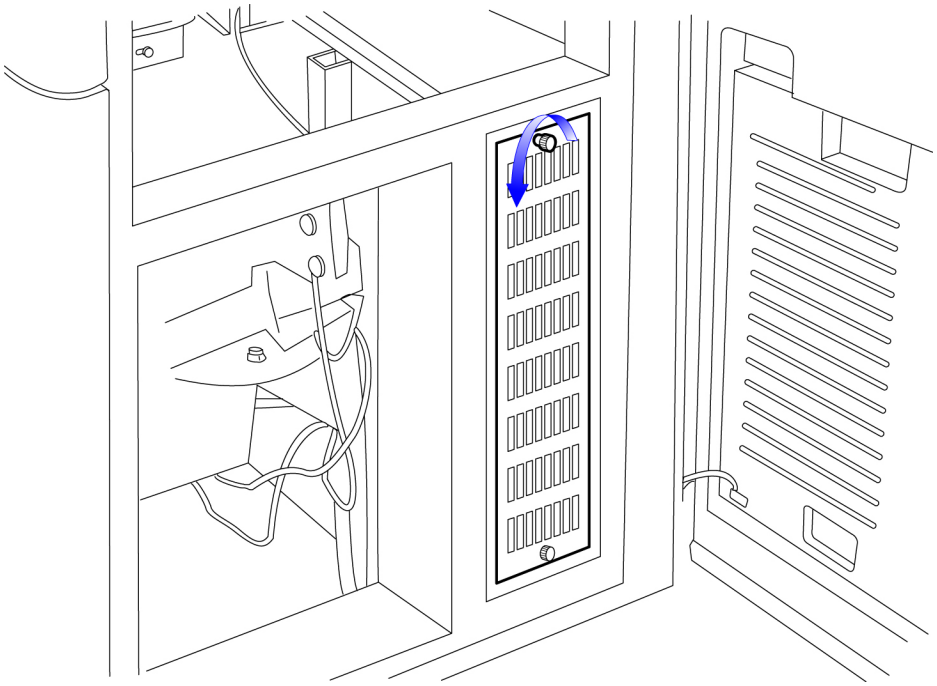

6. Remove the fan filter from the system.

Note If necessary, gently move the silver frame of the fan filter to loosen it.

Figure 5-11: Removing the Fan Filter

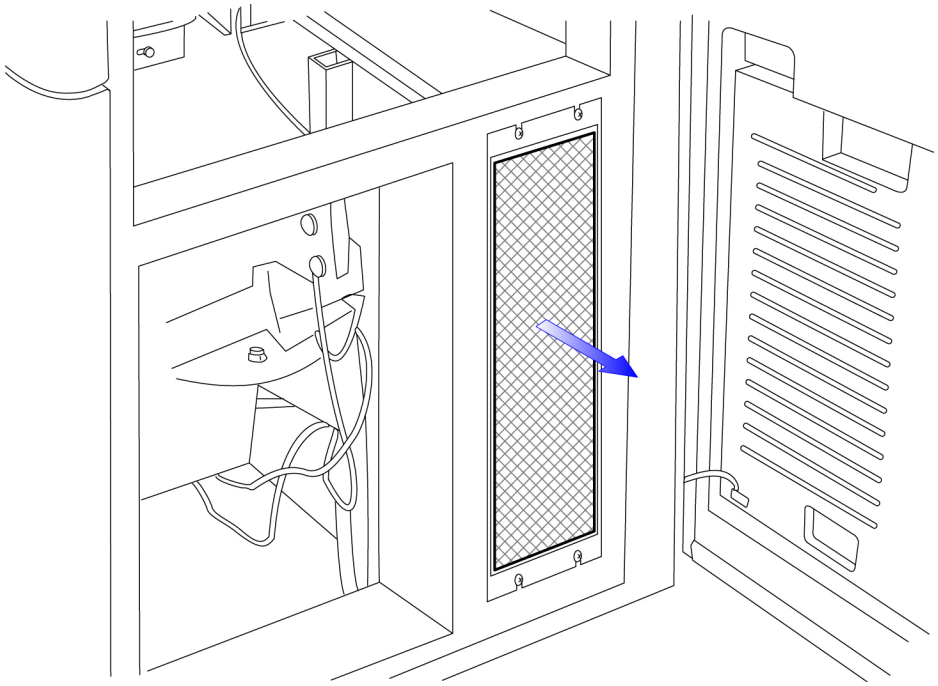

7. To clean the fan filter, hold it under running water and rub it gently to remove the dust.

   Note You can vacuum the fan filter, instead of running it under water.

8. Blot the fan filter dry and place it back on the system.
9. Replace the fan filter guard, using the top and bottom screws.
10. Close the side door panel in place and finger tighten the screw.

Water TestPM

This feature tests the system for alkaline phosphatase contamination. A copy of the IMMULITE 2000 and 2000 XPi Monthly and Quarterly Maintenance Record log is included with this document. See *Worksheets*, page 5-32.

If necessary, perform the following steps to prepare the system before performing the Water TestPM:

1. Initialize diagnostics.

   See *Initializing Diagnostics*, page 5-4.

2. Prime the substrate probe.

   See *Priming the Substrate Probe*, page 5-14.

Performing Water TestPM

To test the system for alkaline phosphatase contamination, perform the following steps:

1. To load the list of diagnostics, select **Load Program**.
2. At the Diagnostic Program window:
   - For the IMMULITE 2000 system, select **WatertestPM – 2000**.
   - For the IMMULITE 2000 XPi system, select **WatertestPM – 2000XPi**.
3. Select **RUN**.

   The system automatically homes all motors.
4. When prompted, place a clean, empty 12 x 75 tube in position 1 of a sample rack.
5. Place the sample rack in position 1 of the Sample Carousel.
6. After the tube is loaded on the system, select **Load tube and press to continue**.
7. When prompted, remove the Water Probe from the Wash Station.
8. Place the Water Probe in the tube (from Step 4).
9. Select **Place Water Probe in tube 1-1**.
10. Select **Press to dispense from the Water Probe**.

    The message `Collecting Water from the Water Probe` displays.

    Note If the Water Probe touches the water inside the sample tube, wipe the Water Probe with a lint-free cloth before returning it to the Wash Station.
11. When prompted, remove the Water Probe from the tube and return it to the Wash Station.
12. Select **Replace Water Probe**.

The system primes the Sample and Reagent Probes, pipettes water, transfers the reaction tubes to the Luminometer, and dispenses substrate. Subsequently, the Photomultiplier Tube (PMT) reads the reaction tubes.

After the system reads the tubes, `Program Complete` displays, and the system generates a report of the results. Table 5-1 is an example report of the results.

Table 5-1: Example Water TestPM Results for the IMMULITE 2000 Systems

```
IMMULITE 2000 (XPi)

WATER TEST PM
mm-dd-yy hh:mm:ss

Serial Number: annnn

Operator: _________________

NOTE: All results have been multiplied by the PMT factor.

Sample Probe CPS: xxx.x - xxx.x (Substrate Only) = xxx.x

Reagent Probe CPS: xxx.x - xxx.x (Substrate Only) = xxx.x

Water probe CPS: xxx.x - xxx.x (Substrate Only) = xxx.x

Sample Probe CPS: xxx.x
Reagent Probe CPS: xxx.x
Water probe CPS: xxx.x
Substrate Only CPS: xxx.x
```

In the example in Table 5-1, `xxx.x` represents the values calculated by the system software.

13. When the system finishes generating the report, fill in the operator's name.

    Using the results, see *Evaluating Water TestPM Results* below.

14. To continue running diagnostics, select **Load Program** and load the appropriate diagnostic.

15. To stop running diagnostics, select **EXIT**, then select **QUIT**.

Evaluating Water TestPM Results

This section explains how to evaluate the Water TestPM results.

Table 5-1 on page 5-26 displays an example of a report generated by IMMULITE 2000/2000 XPi systems.

To evaluate a Water TestPM result, perform the following steps:

Ensure the CPS measurement for each reaction tube meets the following criterion:

- If the CPS measurement of any reaction tube is > 1100, the system may be contaminated.
- If necessary, repeat the WatertestPM.

If the difference between the CPS measurement of each tube and the Substrate Only CPS measurement is $\leq$ 200 CPS, the water test passed.

Quarterly Maintenance

Replacing the CO_2 Scrubber

Note Blockage of the CO_2 scrubber may affect the dispense of substrate from the reservoir. The location of the scrubber may vary from *Figure 5-12*.

For maintenance records that you can copy and use to keep track of maintenance items, see *Worksheets*, page 5-32.

To replace the CO_2 scrubber quarterly (every 3 months), perform the following steps:

1. To remove the old CO_2 scrubber, pull it away from the holding clips.
2. Write the date on the new CO_2 scrubber.
3. Remove the tubing from the old CO_2 scrubber.
4. Take the clear plastic end off the new CO_2 scrubber.
5. Connect the tubing to the new CO_2 scrubber.
6. Place the scrubber in the brackets.

Note To maintain proper airflow and to reduce the chance of developing an obstruction, the bottom end of the CO_2 scrubber tube must not touch the load scale plate.

Figure 5-12: Substrate Reservoir and CO_2 Scrubber

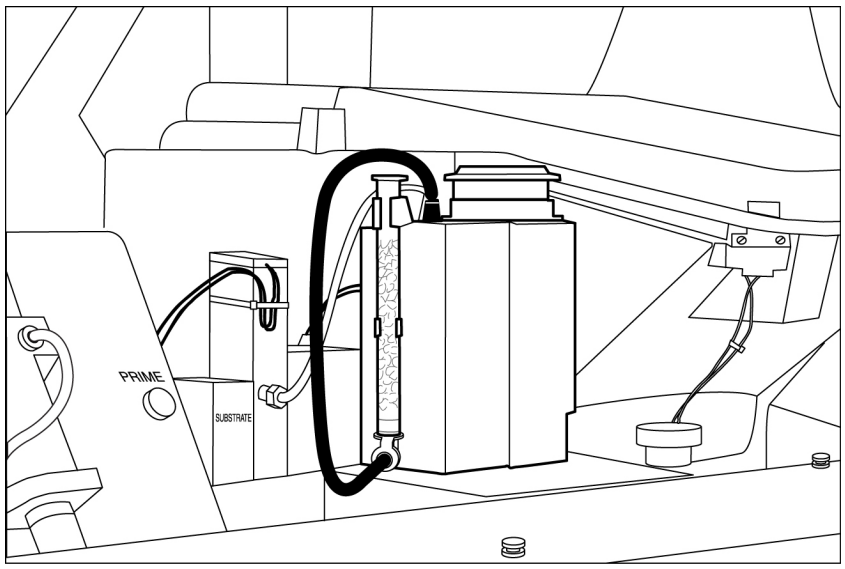

Substrate Reservoir Maintenance

Inspect the Substrate Reservoir for any foreign material or film forming on the bottom of the reservoir cap.

If contamination of the Substrate Reservoir is observed, perform the following:

1. Remove the black plastic straw from the Substrate Reservoir bottle.
2. Discard any unused Substrate.
3. Fill bottle half full with 70% or greater Isopropyl Alcohol.
4. Close lid.
5. Gently swirl bottle to clean interior of reservoir and lid.
6. Open Lid and discard isopropyl alcohol and allow substrate reservoir to dry.
7. Inspect Reservoir and Lid for foreign material if still present repeat step 3 through step 6.
8. Reinsert the black plastic straw until it almost touches the bottom of the reservoir.
9. Refill with substrate to the appropriate fill line.

10. Prime Substrate (see *Priming the Substrate Probe*, page 5-14).

As Needed Maintenance

Perform these procedures whenever needed.

Cleaning the Monitor

To clean the monitor, perform the following steps:

1. Turn off the monitor.
2. Wipe the monitor with a damp cloth.

Cleaning the Trackball

To clean the trackball, perform the following steps:

1. Remove the trackball by grasping it and pulling it straight up.
2. Clean the ball using a 70% isopropyl alcohol solution.
3. Dry the trackball with a lint-free wipe, then place it back in the holder.

Maintaining the Sample Racks

To clean the sample racks, perform the following steps:

1. Clean the sample racks with warm, soapy water.
2. Rinse the sample racks thoroughly before using.
3. Ensure the barcode labels are not cracked or peeling.

Replacing Sample Rack Labels

When you have to replace a sample rack barcode label, ensure that you use the correct label type for the sample rack.

- Standard sample racks use barcode labels that display uppercase letters.
- Tube top sample racks use barcode labels that display lowercase letters.

Direct Water Feed System Routine Maintenance

Note This procedure is only applicable to systems that have the optional Direct Water Feed option installed.

The routine maintenance required for the system water system consists of flushing. The water system is self-contained and has no operator-serviceable parts.

Minimal daily use of the IMMULITE 2000 systems, running 300 tests per day or more, aids in preventing contamination of the system with alkaline phosphatase-producing organisms. Flushing the water system eliminates most contamination.

The water system needs to be flushed if:

- The system has not been run for 48 hours or more.
- Less than 300 tests are performed per day.

Flushing Procedure

To flush the water system, perform the following steps:

1. Open the left front door.
2. Lift the water bottle off its load cell.
3. At the quick disconnect fittings, disconnect the inlet and outlet tubings.
4. Disconnect the sensor wires leading to the float switch at the quick disconnect.
5. Unscrew the large white cap from the water bottle.
6. Pour the water from the water bottle into a sink or drain.
7. Reconnect the cleaned water bottle to the tubings and reconnect the sensor wires.

   Note Ensure the electrical connector is dry before reconnecting.
8. Place the empty bottle back on the water load cell and allow the bottle to automatically refill.
9. Repeat step 2 and step 8 two times.

Water Test Procedure

To test the water for alkaline phosphatase contamination, perform the following steps:

1. If necessary, initialize diagnostics.

   See *Initializing Diagnostics*, page 5-4.
2. Select **Cover Unlock – 2000**.
3. Select **RUN**.

   The cover unlocks.
4. Lift the cover.
5. To load the list of diagnostics, select **Load Program**.

6. Select **SUBSTRATE PRIME – 2000**.
7. Prime the substrate:
   a. Select **RUN**.
   b. When prompted, remove the probe.
   c. Hold the probe over a clean beaker or other external container and select **Press to Prime**.

      The substrate begins to prime.
   d. When a clean, straight stream is dispensed, select **Press to stop priming**.
   e. When prompted, replace the probe.
   f. To return to the Diagnostic Program screen, select **Load Program**.
8. Select **WATERTEST– 2000**.
9. Test the water source:
   a. Select **RUN**.
   b. Select **Press to Start Initialization**.
   c. At the next prompt, pipet 50 µL of water into the first of 2 reaction tubes.

      Note The procedure requires manually pipetting 50 µL water (from the water source) into a reaction tube and loading the tube on the tube processor shuttle. No bead is required in this tube.
   d. Place the tube into the shuttle.
   e. Select **Load tube in shuttle**.
   f. Place an empty reaction tube into the shuttle, then select **Load tube into shuttle**.

      The following messages display:

      ```
      Loading tube in luminometer
      Adding Substrate
      Starting a 5 minute substrate incubation
      Reading tubes at PMT
      ```
   g. After 5 minutes, when prompted, select the **Test complete press to stop** button to stop the diagnostic and generate a printout.

   The Water Test procedure calculates results using the PMT factor. Table 5-2 on page 5-32 displays an example of a report generated by IMMULITE 2000/2000 XPi systems.

Evaluating WATERTEST Results

Table 5-2: Example Water Test Results for the IMMULITE 2000/2000 XPi systems

```
IMMULITE 2000 (XPi)

WATER TEST
mm-dd-yy hh:mm:ss

Serial Number: annnn

Operator: _________________

All results have been multiplied by the PMT factor.

Source Water CPS: xxx.x - xxx.x (Substrate Only) = xxx.x

Source Water CPS: xxx.x
Substrate Only CPS: xxx.x
```

This section explains how to evaluate the Water Test results.

In the example in Table 5-2, `xxx.x` represents the values calculated by the system software.

To evaluate the water test results, perform the following steps:

Ensure the CPS measurement for each reaction tube is < 1100 CPS.

- If the CPS measurement of any reaction tube is > 1100, the source water may be contaminated.
- If necessary, repeat the Water Test Procedure.

If the difference between the CPS measurement of the source water and the Substrate Only CPS measurement is $\leq$ 200 CPS, the water test passed.

Worksheets

This section includes the following worksheets:

- IMMULITE 2000 systems Daily and Weekly Maintenance Record
- IMMULITE 2000 systems Monthly and Quarterly Record

You can copy these items and use them as needed.

IMMULITE 2000 Systems Adjustment Log

Serial # _____

Guidelines

1. QUALITY CONTROL
2. SLOPE
   - •Initial adjustment should be within Instrument Slope Range
   - •Readjustment should be within +/- 10% of previous slope
3. INTERCEPT should be less than or equal to the intercept guideline

Date	Test	Kit Lot	Controls	Slope	Intercept	Adj. Valid	Tech

IMMULITE 2000 Daily and Weekly Maintenance Record

Serial #: _____

Month: _____

	1	2	3	4	5	6	7	8	9	10	11	12	13	14	15	16	17	18	19	20	21	22	23	24	25	26	27	28	29	30	31
Daily Maintenance:																															
Log Off System																															
Clean Probes & Check sample Probe Dispense Angle																															
Restart the Computer																															
Check & Fill Reaction Tube Hopper																															
Check & Fill Water																															
Check & Fill Probe wash																															
Check & Fill Substrate																															
Check & Empty Waste																															
Prime Sample & Reagent Probes																															
Prime Water Probes																															
Prime Substrate Probe																															
Operator's Initials:																															

Weekly Maintenance:	**Week 1**						**Week 2**						**Week 3**						**Week 4**						**Week 5**						
Clean liquid Waste Tube																															
Operator's Initials:																															

IMMULITE 2000 XPi Daily and Weekly Maintenance Record Using AutoStart

Serial #:_____

Month:_____

	1	2	3	4	5	6	7	8	9	10	11	12	13	14	15	16	17	18	19	20	21	22	23	24	25	26	27	28	29	30	31
Daily Maintenance:																															
Check & Fill Reaction Tube Hopper																															
Check & Fill Water																															
Check & Fill Probe wash																															
Check & Fill Substrate																															
Check & Empty Waste																															
Prime Substrate Probe																															
Perform AutoStart																															
Operator's Initials:																															

Weekly Maintenance:	**Week 1**						**Week 2**						**Week 3**						**Week 4**						**Week 5**						
Clean liquid Waste Tube																															
Check sample Probe Dispense Angle																															
Operator's Initials:																															

IMMULITE 2000/2000 XPi Systems

Monthly & Quarterly Maintenance Record

Serial # _____

Monthly and Quarterly maintenance for the year beginning _____ _____ to the year ending _____ _____
month year month year

Monthly Maintenance List	JAN	FEB	MAR	APR	MAY	JUN	JUL	AUG	SEP	OCT	NOV	DEC
Clean Water Bottle and Probe Wash Bottle												
Decontaminate the Lines												
Decontaminate the Transducer												
Reagent Probe Angle												
Clean the Fan Filter												
Water Test PM												
Operator Initials												
Supervisor Initials												

Quarterly Maintenance List	Date	Date	Date	Date
Inspect Substrate Reservoir and Cap for Foreign Material				
Replace CO_2 Scrubber				
Operator Initials				
Supervisor Initials				

6 Troubleshooting

Viewing the Error Report Window 6-1

Troubleshooting from the Menu Screen 6-1

Viewing Day Error Log 6-1

Viewing System Temperatures 6-2

Dealing with Jams 6-2

Diagnostic Jams 6-2

Tube Indexer Jam 6-3

Viewing the Event Log 6-4

Using the Waste Chute Clean Out Tool 6-6

Detecting and Correcting Clots 6-7

Sample Clots 6-7

Clinging Clots 6-8

Handling Clots on the IMMULITE 2000 System 6-9

Gel Clots 6-9

Hanging Clots 6-9

Air in the Clot Detection Transducer IMMULITE 2000 6-10

Handling Clots on the IMMULITE 2000 XPi System 6-11

Gel Clots 6-11

Hanging Clots 6-11

Replacing Probes 6-12

Using Diagnostic Programs 6-13

Diagnostic Program Descriptions 6-14

Electrical Power Loss 6-15

Quick Reference Assay Troubleshooting Guide 6-16

Sandwich Assays 6-16

Competitive Assays 6-16

Pre-Treated Assays 6-16

Troubleshooting Controls Post Adjustment 6-17

Troubleshooting

Viewing the Error Report Window

The Error Report window lists the current system errors. It displays automatically when the system detects an error.

Note You can move the scroll bar to the right to view the end of a long error message.

The following table describes the buttons on the Error Report window:

Button	Function
Help	Provides help for correcting the problem that caused the error.
Sound On Sound Off	If you select **Sound On**, the system beeps when the Error screen displays. The button changes to Sound Off. If you select **Sound Off**, the system does not beep when the Error screen displays. The button changes to Sound On.
Close	Closes the Error screen.
Print Errors	Prints the current errors.

Troubleshooting from the Menu Screen

Viewing Day Error Log

The Day Error Log screen displays the error messages for the current day only.

1. Select **MENU**.
2. Select **Day Error Log**.
3. Select the **Previous Page** and **Next Page** buttons to page through the errors.

   Note Select the **Home** and **End** buttons to move to the beginning and end of the error list respectively.
4. To print the Day Error Log, select **Print Error Log**.
5. Select **Close**.

Viewing System Temperatures

1. Select **MENU**.
2. In the Tools panel, select **Temperatures**.

   The TEMPERATURES And HUMIDITY window displays.
3. Select **PRINT** or **Cancel**.

Dealing with Jams

If the system detects a jam during system initialization, the system software screen may be minimized. If this occurs, right-select system software from the task bar and select **Close** to exit the system software. Relaunch the program by double-selecting the IMMULITE 2000 icon or IMMULITE 2000 XPi icon from the Windows desktop. Select **View Event Log** to determine the cause of the jam.

Diagnostic Jams

1. Identify the slave and motor number.

   If a jam occurs while a diagnostic program is running, use the “Slave Motor Chart,” on page 6-3, to determine the part of the system associated with the jam.
2. If the part that jams is accessible, investigate and try to resolve the problem. After resolving the problem, continue with step 4.

3. If the part is not accessible to the operator, contact technical support.

Table 6-1: Slave Motor Chart

Slave 0 Module	Motor #	Slave 2 Module	Motor #
Sample Arm X	0	Bead Carousel	0
Sample Arm Z	1	Tube Indexer	1
Sample Valve	2	Tube Transporter	2
Sample Dilutor	3	Processor Shuttle	3
Sample Carousel	4	PMT Shuttle	4
Slave 1 Module	**Motor #**	Bead Dispenser	5
Reagent Arm X	0	**Slave 3 Module**	**Motor #**
Reagent Arm Z	1	Luminometer Chain	0
Reagent Valve	2	Luminometer Shuttle	1
Reagent Dilutor	3	Tube Lifter	2
Reagent Carousel	4	Geneva Indexer	3
Reagent Lid Opener	5	PMT Attenuator	4
		Slave 4 Module	**Motor #**
		Dilution Well	0
		Wash well	1

4. If the problem was resolved using the Slave Motor Chart, run the Home All Motors diagnostic:
   a. Select **Load Program** at the top of the screen to exit the current diagnostic and return to the list of diagnostic programs.
   b. From the list, select **Home All Motors**.
   c. To start, select **Run** on the menu bar.
5. Determine if Home All Motors completes successfully.

   If Program Complete displays at the top of the screen, Home All Motors successfully completed. Rerun the diagnostic.

   If the system jams while Home All Motors is running, contact technical support.

Tube Indexer Jam

1. Ensure the instrument is in Pause mode.
2. Open the front panel doors and verify that the proper reaction tubes are in the tube hopper.
3. Pull out the pin that connects the orientation brush to the orientation chute.

4. Lift the orientation brush and place it behind the orientation chute. Be sure not to pull the orientation brush towards the front of the instrument to prevent the disconnecting of wires.
5. Take out and discard all reaction tubes in the orientation chute including any tubes that are in the tube indexer itself.
6. Place the orientation brush back in the orientation chute.
7. Put the pin back in place to secure the orientation brush.
8. Push the tube hopper back into place and place the instrument back into Run.

Viewing the Event Log

The View Event Log screen provides an event and error history of error messages from the past 90 days. You can only access the View Event Log screen from the Startup screen. For more information about reading the error log and the error messages that may display, see *Appendix H, Error Messages*.

To view the event log, perform the following steps:

Note If tests are in progress, they are lost when **STOP** is selected.

1. Select **STOP**.

   A warning message displays for you to confirm you are stopping the system.
2. Select **Log Off**.
3. Select **OK**.
4. Select **CONTINUE**.
5. At Startup screen, select **View Event Log**.
6. Under TIME RANGE, select **Whole Event Log** to view the entire error history or select **Selected Time Range** to specify a date and time.

   If you select **Selected Time Range**, perform the following steps:

   a. Select a **Start Date** from the calendar and a **Start Time** from the clock.
   b. Select an **End Date** from the calendar and an **End Time** from the clock.

7. Under **ERRORS**, select **All Error Types** to view all errors or **Selected Range** to view specific errors.

   If you select **Selected Range**, enter the event numbers for the errors in the From and To windows.

8. Under **SEVERITY**, select **All Severity Levels** to view all errors or **Selected Levels** to view only a certain level of error.

   Note Severe errors are errors that affect test results or interrupt system operation.

   If you selected **Selected Levels**, select **WARNINGS**, **ERRORS**, or **SEVERE ERRORS**.

   Note You can select more than one level.

9. Sort the errors by either **Date And Time** or **Event Number** by selecting the appropriate option under Sort Order.

10. Select **SEARCH**.

    The View Event Log screen displays the errors that meet the your search criteria.

    a. Select **Previous Page**, **Next Page, Home,** or **End** to scroll through the event messages.

       Note This log may be hundreds of pages long; selecting **Print Error Log** prints every page. Before printing, refine the search, and print only the relevant events.

    b. Select **Print Error Log** to print the Error Log.

11. Select **CLOSE**.

Using the Waste Chute Clean Out Tool

To safely clear a solid waste chute jam, perform the following steps:

Note This procedure requires the waste chute clean out tool (Part Number 400918).



BIOHAZARD

Wear personal protective equipment. Use universal precautions. Refer to *Safety Instructions*, page A-1 for recommended precautions when working with biohazardous materials.

1. Put the system in **Stop** mode and open the system top cover and the front panel doors.



CAUTION

Do not insert the waste chute clean out tool into the top of the waste chute. Inserting the waste chute clean out tool into the top of the waste chute may damage the instrument.

2. Remove the solid waste container and check to see if it is full.



WARNING

Do not replace the red biohazard bag improperly or place the solid waste container in backward. Replacing the bag improperly or putting the solid waste container in backwards can cause the solid waste to back up in the waste chute. Use care in replacing the biohazard bag and solid waste container.

3. Place a shallow container or an absorbent cloth over the solid waste load scale, toward the back of the cabinet.

   This protects the load scale and catches any reaction tubes. It also prevents falling beads from rolling under the load scale.

4. Locate the waste chute opening in the upper left-hand corner of the solid waste container area.
5. Insert the waste chute clean out tool or flexible tubing such as Tygon (approximately 38 cm (15 inches) in length and 19 mm (¾ inch) in diameter) into the waste chute opening from the bottom.
6. Dislodge the jam by using repeated short up and down movements.
7. Remove the tool.

   The jammed reaction tubes and beads fall onto the shallow container or absorbent pad.

8. Remove the waste chute cover, which is located on top of the system behind the wash spin station.
9. Using a flashlight, look into the opening for the presence of reaction tubes.

   None should be visible.
10. If tubes are present, manually remove them.
11. To make sure that the blockage was removed, drop an empty reaction tube marked with an x down the solid waste chute.

    The marked reaction tube should travel freely down the chute to the tray or cloth in the solid waste container area.
12. If the marked reaction tube does not drop through, repeat steps, as necessary.

Detecting and Correcting Clots

The system differentiates between two types of clots: sample clots and clinging clots.

Sample Clots

The system displays the following messages to indicate a sample clot:

Error Number	Error Message	Error Box Description
562	`Clot detected in sample tube - sample will not be run`	Blue print in white box
594	`Marking sample tube as bad`	Blue print in white box

Sample clots occur when the clot remains in the sample. The system successfully draws a slug of air after the clot is detected, indicating the pipettor is not obstructed.

1. Select **WORKLIST**.
2. Select **Display/Edit**.
3. Locate the clotted sample on the worklist.

   Sample Error displays in the status column.
4. Remove the sample rack from the system.

   For the IMMULITE 2000 system, perform the following steps:

   a. Open the sample access door.

      The system enters SAMPLE PAUSE mode.

b. On the Home screen, select the rack letter where the clotted sample is located.

   The rack moves to the front.

c. Remove the rack.

For the IMMULITE 2000 XPi system, select the RACK EJECT button on the Home screen to eject the rack using the RACK LOADER. See *Figure 1-4, IMMULITE 2000 XPi System (Front View)*.

5. Remove the clotted sample.
6. Return the sample rack to the sample carousel.
7. For the IMMULITE 2000 system, press **RUN** to resume system operation.

Clinging Clots

The system displays the following message to indicate a clinging clot:

Error Number	Error Message	Error Box Description
563	`Clot detected in sample tube. Clean exterior of sample probe before resuming operation.`	Severe icon in a red box

A clinging clot occurs when the clot is stuck to the sample pipettor. The system is unsuccessful when it draws a slug of air, indicating the pipettor is obstructed. No additional samples are pipetted until the clot is removed.

Three possible causes of a clinging clot message are:

Clot Type	Description
Gel clot	The pipettor entered the gel in a gel separator tube.
Hanging clot	A clot is hanging on the end of the pipettor.
Air in the system	Air is present in the clot detection module.

Handling Clots on the IMMULITE 2000 System

CAUTION

Do not insert anything into the probe. Permanent damage may occur.

BIOHAZARD

Wear personal protective equipment. Use universal precautions. Refer to *Safety Instructions*, page A-1 for recommended precautions when working with biohazardous materials.

Gel Clots

1. Select **PAUSE**.
2. With the system in pause mode, select **COVER** to open the system cover.
3. Visually inspect the probe.
4. If the probe entered the gel barrier of a tube, replace it.

   See *Replacing Probes*, page 6-12.
5. Select **PRIME** to prime the DRDs.
6. To remove the sample rack from the system, perform the following steps:
   a. Open the sample access door.
   b. On the Home screen, select the rack letter where the clotted sample is located to move the rack to the front.
   c. Remove the rack.
7. Remove the clotted sample.
8. Return the sample rack to the carousel.
9. Close the cover and select **RUN**.

Hanging Clots

To remove a hanging clot, follow these steps:

1. Select **CLOSE** on the red error message box.
2. Select **PAUSE**.
3. With the system in pause mode, select **COVER** to open the system cover.
4. Visually inspect the probe.

5. Use a lint-free wipe to remove the clot with a downward wiping motion.
6. Select **PRIME** to prime the DRDs.
7. Locate the clotted sample:
   a. Open the sample access door.
   b. On the Home screen, select the rack letter where the clotted sample is located to move the rack to the front.
   c. Remove the rack.
8. Remove the clotted sample.
9. Return the sample rack.
10. Close the system cover and select **RUN**.

Air in the Clot Detection Transducer IMMULITE 2000

If air is detected in the clot detection transducer, the system enters sample pause. Follow these steps to remove air from the clot detection module.

1. Select **PAUSE**.
2. With the system in pause mode, select **COVER** to open the system cover.
3. Visually inspect the probe.
4. Select **STOP**.

   Note Tests in progress are lost when STOP is selected.
5. Select **PRIME** to prime the DRDs.
6. Log off of the system.
7. Initialize diagnostics. See *Initializing Diagnostics*, page 5-4.
8. Select **Clot Prime** diagnostic.
9. Allow the diagnostic to run for several minutes to ensure that all of the air is eliminated.
10. Rerun all samples that being run when air was detected in the Clot Detection Transducer.

Handling Clots on the IMMULITE 2000 XPi System

CAUTION

Do not insert anything into the probe. Permanent damage may occur.

BIOHAZARD

Wear personal protective equipment. Use universal precautions. Refer to *Safety Instructions*, page A-1 for recommended precautions when working with biohazardous materials.

Gel Clots

1. Open the pipettor cover.
2. With the system in sample pause mode, visually inspect the probe.
3. Replace the probe if it entered the gel barrier of a tube. See *Replacing Probes*, page 6-12 for more information.
4. Close the pipettor cover.
5. Select **PRIME** to prime the DRDs.
6. Locate the clotted sample.
7. To eject the rack using the RACK LOADER, select the RACK EJECT button on the Home screen where the clotted sample is located. See *Figure 1-4, IMMULITE 2000 XPi System (Front View)*.
8. Remove the clotted sample.
9. Select **RUN**.

Hanging Clots

Follow these steps to remove a hanging clot.

1. Select **CLOSE** on the red error message box.
2. Open the pipettor cover.
3. With the system in sample pause mode, visually inspect the probe.
4. Use a lint-free wipe to remove the clot with a downward wiping motion.
5. Close the pipettor cover.
6. Select **PRIME** to prime the DRDs.
7. Locate the clotted sample.

8. To eject the rack using the RACK LOADER, select the RACK EJECT button on the Home screen where the clotted sample is located. See *Figure 1-4, IMMULITE 2000 XPi System (Front View)*.
9. Remove the clotted sample.
10. Close the pipettor cover.
11. Select **RUN** to resume system operation.

Replacing Probes

Figure 6-1: Probe in Arm Mount

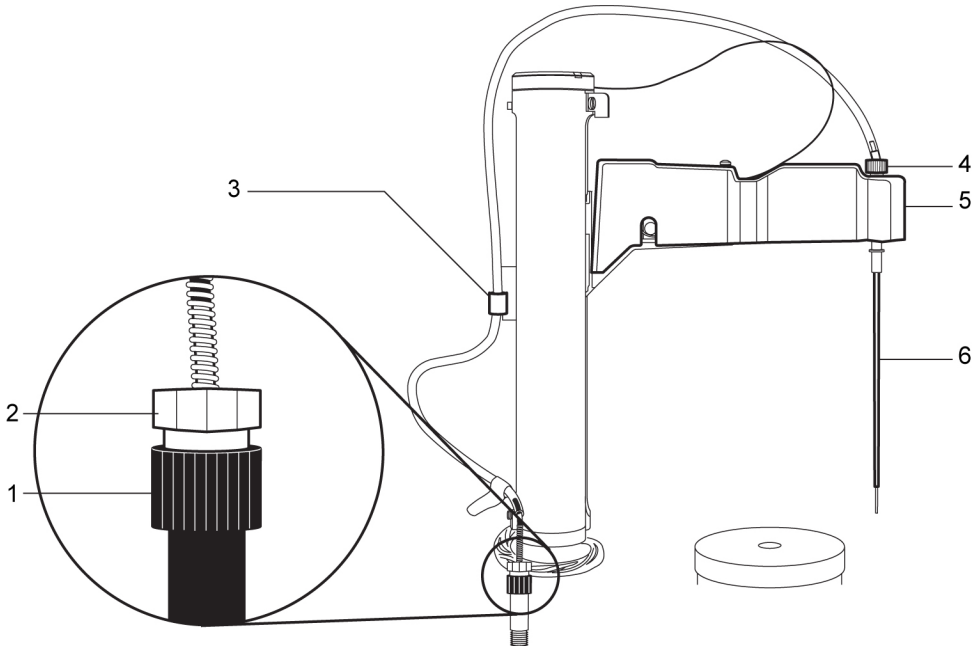

1. Probe extension
2. Probe fitting
3. Retaining clip
4. Arm mount
5. Probe arm
6. Probe

BIOHAZARD

Wear personal protective equipment. Use universal precautions. Refer to *Safety Instructions*, page A-1 for recommended precautions when working with biohazardous materials.

Note The system must be in STOP mode to open the cover. If necessary, select **STOP** before proceeding with the following instructions.

Perform the following steps to replace the probe:

1. Remove the probe tubing from the retaining clip from the reagent/sample arm column.
2. Unscrew the probe fitting from the black probe extension.
3. Unscrew the probe from the arm mount, and remove the probe from the arm.
4. Properly discard the old probe.
5. Insert the probe into the arm mount and tighten securely.
6. Attach the probe fitting of the new probe to the black probe extension.

   Note Avoid twisting or kinking the probe tubing.
7. Verify the tubing is on the left side of the sample/reagent arm.
8. Attach the probe tubing to the retaining clip on the reagent/sample arm.
9. Properly prime all air from the new probe.
   a. Press the green **PRIME** button until priming starts. See *Priming the Sample and Reagent Pipettors*, page 5-12.

      Alternatively, select **PRIME** on the monitor instead of the green PRIME button.
   b. Continue priming until no bubbles are in the dual resolution dilutors or the tubing, and a steady stream of fluid flows from the new probe.

Using Diagnostic Programs

To diagnose or correct system problems, use the Diagnostic programs. After the system loads a program, instructions display which are specific to that program.

For information about initializing the diagnostic software, see *Initializing Diagnostics*, page 5-4.

Note You cannot perform diagnostics if the system software is running. If necessary, log off of the system software before proceeding. See *Logging Off the System*, page 5-3.

Diagnostic Program Descriptions

The diagnostic programs are listed and described in the following table:

Program Name	Description
Substrate & Water Prime	Primes the substrate and water probe. The probe should be placed in a beaker or external container before priming starts. **Note** The program includes prompts to remove the substrate and water probes from the bead/tube wash station before each is primed.
SUBSTRATE PRIME	Primes the substrate probe. The probe should be placed in a beaker or external container before priming starts. **Note** The substrate probe must be removed from the bead/tube wash station before priming.
Transducer Decon	 **BIOHAZARD** Wear personal protective equipment. Use universal precautions. See *Safety Instructions*, page A-1 for recommended precautions when working with biohazardous materials. In its solid form, sodium hydroxide is caustic. when using a sodium hydroxide solution, avoid contact with skin or clothing. With either the solid or the solution, take customary laboratory precautions. Decontaminates the clot detection mechanism using 0.1M NaOH in a 12 x 75-mm sample tube. After loading Transducer Decon, follow the instructions on the screen. **Note** A prompt displays instructing the operator to place a 12 x 75-mm sample tube with 2.5 mL of 0.1M sodium hydroxide (NaOH) in position 1.
Tube Chute Test	Tests the sensors in the exit tube chute.
Waste Tube Cleaning	Takes probe cleaning solution from the sample carousel and reagent wedge and cleans the waste tube from the wash/spin station. Part of weekly maintenance. See *Weekly Maintenance*, page 5-15.

Program Name	Description
Water Probe Prime	Primes the water probe. **Note** The water probe must be removed from the bead/tube wash station before priming.
WATERTEST	**Note** WATERTEST uses *two* reaction tubes. Used to test the water for alkaline phosphatase contamination. After loading WATERTEST, follow the on-screen instructions. For detailed instructions (including how to evaluate the results). See *Water Test Procedure*, page 5-30.

Electrical Power Loss

Note An Uninterruptible Power Supply (UPS) battery backup unit is optional for customers outside the U.S.

The system is equipped with a UPS battery backup unit and continues operation for a limited time after loss of power. The duration of battery backup for a fully charged UPS is approximately 30 minutes.

Siemens recommends stopping the run as soon as possible, then power off the system. This allows the system to shut down safely and avoids possible damage to the database, which may occur if the battery backup is allowed to completely discharge. Turning the power off also avoids a possible surge when main power returns.

Note Although the system continues to operate on battery power for a limited time after the loss of power, you should not put new tests on the system.

In the event of an unexpected loss of electrical power, perform the following steps as soon as possible:

1. Restart the computer. See *Restarting the Computer*, page 5-6.
2. Depending on the amount of time before power is restored, use the following guidelines:
   - For up to one hour of power loss, the system needs about one hour to re-stabilize all temperatures.
   - For 6 to 12 hours of power loss, the system needs two or more hours to stabilize temperatures and humidity levels.
   - If you anticipate 12 to 24 hours of power loss, remove and refrigerate all reagent wedges.

- For 24 hours of power loss or more, remove the bead packs and protect them against adverse humidity levels.

Quick Reference Assay Troubleshooting Guide

These tables may be a helpful guide when investigating unusual results.

Note Factors such as system maintenance and onboard consumables affect results if not properly maintained.

Sandwich Assays

Condition	Expected Result
No Bead	Error or < lower assay limit
No Sample	< lower assay limit
No Reagent	Error; < assay limit; Extremely low results
No Substrate	Error and CPS < 100 CPS

Competitive Assays

Condition	Expected Result
No Bead	Error
No Sample	< Lower assay limit
No Reagent	Error; > Upper assay limit
No Substrate	Error; CPS < 100 CPS

Pre-Treated Assays

Condition	Expected Result
No Bead	Error
No Sample	< Lower assay limit
No Reagent (1) Pretreatment	< Lower assay limit
No Reagent (2)	Error; > upper assay limit
No Substrate	Error; CPS < 100 CPS

Troubleshooting Controls Post Adjustment

Controls	Slope	Intercept	Recommended Troubleshooting
Exceed acceptable limits	> 10% previous adjustment or outside slope range	Exceeds limit	Adjustors
Within acceptable limits	> 10% previous adjustment or outside slope range	Exceeds limit	Reagent wedge
Exceed acceptable limits or biased compared to historical performance	Within 10% of previous adjustment or within slope range	Within limits	Controls

7 Data Management

Exporting Data 7-1
Saving Files to CD or DVD 7-2
Viewing Results and Sending Data to the LIS. 7-3
Sending Results to the LIS 7-4
Resending Results to the LIS 7-4

Data Management

Exporting Data

Data to export when troubleshooting a problem:

- Data resulted during a specific time period
- A particular type of data, such as patient or adjustor
- Data for a particular test

To export data, perform the following steps:

1. On the horizontal toolbar, select **MENU.**
2. Select **Export Data**.
3. Under **START** and **END**, select the time period:
   a. To access the calendar and select a date, select the **Date** field.
   b. To access the clock and select a time, select the **Time** field.
4. Under **Export Method**, select one of these options:
   - **Screen** to view the selected data on the screen.
   - **File** to export the selected data to a file.
   - **Printer** to print the selected data.
5. Under **Data**, select the data type, **Patients**, **Adjustors**, **Control**, or **Verifiers**, or select **All** to export all data types.
6. Under **Test Type**, select the test type or select **ALL** to export all test types.
7. If you selected **Screen** as the Export Method:
   a. Select **PERFORM EXPORT**.
      The Export Data window is displayed.
   b. Page through the data using **Next Page** or **Previous Page**.
   c. To close the Export Data window, select **CLOSE**.
8. If you selected **File** as the Export Method:

   The fields under **File Information** are active.
   a. To change the file name, select **CHANGE FILENAME**, then enter a new filename.
   b. Select **Field Delimiter** and **Extended Fields** options.

c. Select **PERFORM EXPORT**.

The Save As.. window is displayed.

If you inserted a data storage device into the USB port on the keyboard tray, select it to save the file.

Note Not all systems have USB ports.

d. Select where to save the file.

e. Select **Save**.

9. If you selected **Printer** as the Export Method, select **PERFORM EXPORT**.

Saving Files to CD or DVD

Follow these steps to save data files to a CD or DVD using the CD/DVD burner.

Note The CD/DVD burner is not available on all systems.

1. Export the necessary data to the desktop.

   See *Exporting Data*, page 7-1.

2. On the toolbar, select **LOG OFF**.
3. Double-select the **Nero StartSmart** icon on the Windows desktop.
4. Depending on the disc format in use, select **CD** or **DVD** from the upper-right corner.
5. Select **Data**, then select **Make Data Disc**.

   The Disc Content window is displayed.

6. To select the files to burn to disc, select **Add**.
7. Select the appropriate file(s) to add to the disc.
8. Select **Add**.
9. Continue to select and add files as necessary.
10. Select **Finished** after adding files.

    The Disc Content window is display listing the files to be written to disc.

11. Confirm all appropriate files are listed.
12. Select **Next**.

    The Final Burn Settings window is displayed.

13. Enter the name of the disc in the Disc name field.
14. Set the Writing speed to **48x (7,200 KB/s)**.

15. Select the Number of copies to burn.
16. Select **More**.

    The Final Burn Settings window expands to display more options.

    Note Do not select the Allow files to be added later (multisession disc) field.
17. Select the **Finalize Disc** checkbox.

    No additional data can be written to the disc after it is finalized.
18. Insert a blank CD/DVD into the burner.
19. From the Final Burn Settings window, select **Burn**.

    After the burn process begins, a status window is displayed.
20. At the status window, follow these steps:
    a. Select **Burn new CD using Nero StartSmart**.
    b. Check the **Always do the selected action** box.
    c. Select **OK**.
21. From the Burn Process window, select **Next**.
22. Remove the CD/DVD from the burner.
23. Select **Exit**.
24. If prompted to save the project, select **No**.
25. At the Nero window, select the button to exit the software.

Viewing Results and Sending Data to the LIS

To view results and send data to the LIS, perform the following steps:

1. On the toolbar, select **LIS**.

   The LIS screen displays the data. The last selected viewing options, Hide Sent, Show Sent, or Sort By, determine the information displayed when the **LIS** button is selected.
   a. To hide data sent to the LIS, select the **Hide Sent** button.

      The button changes to Show Sent.
   b. To display all data, select the **Show Sent** button.

      The button changes to Hide Sent.
2. Sort the LIS data by selecting the **Sort By...** button.

   The Sort By screen is displayed.

3. If appropriate, specify a period other than Prior 24 Hours by selecting **Define Range**:
   a. To access the calendar and select a date, select the date field.
   b. To access the clock and select a time, select the time field.
4. To sort the data, select one of the following sort buttons:
   - **Accession Number**
   - **Order Created**
   - **Name**
   - **Test Type**
5. To print the list, select **Print List**.

Sending Results to the LIS

If the system is not configured to send data automatically:

1. To hide data that was already sent to the LIS, from the LIS screen, select **Hide Sent**.

   The button changes to Show Sent.
2. To transmit results to the LIS, manually select records or select **Tag All**.

   If **Tag All** is selected, the button changes to **Un-Tag All.**
3. To transmit the tagged results to the LIS, select **Send**.

If **Clear** is selected, it will permanently clear all selected data information from the LIS screen.

Resending Results to the LIS

To resend results previously sent to the LIS, perform the following steps:

1. At the LIS screen, select **Hide Sent**.

   The results previously sent to the LIS display.
2. Select the results to be sent by clicking on them.
3. Select **Re-Send** to transmit the results to the LIS.

8 Configuring the System

Using the Configure Screen 8-1
Configuring Display Options 8-1
Configuring Auto Dilutions 8-3
Configuring ID Information 8-3
Using the Configuration Settings Window 8-4
Configuring the LIS 8-8
Configuring IMMULITE 2000 Systems to Send Controls to the LIS . . 8-12
FSE Configuration 8-13
Load Scale 8-13
Instrument Mode 8-13
Resetting the Load Scale 8-13
Configuring System Functions 8-14
Defining Test Ranges 8-14
Viewing Allergen Ranges 8-15
Configuring Reflexive Tests 8-15
Activating Reflexive Testing 8-16
Setting up Reflexive Testing 8-16
Editing Reflexive Testing Configurations 8-17
Ordering Additional Reflexive Tests for a Range 8-18
Adding or Editing a Dilution Factor 8-18
Removing a Reflex Test 8-18
Deleting a Reflexive Test Range 8-18
Printing the Current Ranges 8-19
Panel Configuration 8-19
Creating a New Panel 8-19
Editing a Panel 8-20
Adding a Test to a Panel 8-21
Removing a Test from the Panel 8-21
Changing the Dilution Factor for an Immunoassay 8-21
Deleting a Panel 8-21
Units Configuration 8-22
AutoStart Configuration Screen (IMMULITE 2000 XPi System) 8-23
Automatic Substrate Dispense 8-23
Reports 8-24

Editing Chartable Patient Reports 8-24
Configuring the Laboratory Name 8-25
Enabling or Disabling Fields 8-25
Moving Fields 8-26
Manually Printing the Chartable Patient Report 8-27
Restoring the Template 8-27
Changing Windows Settings 8-27
Resetting the Date, Time, and Time Zone 8-28
Changing the Sound 8-28
Calibrating the Touchscreen 8-29
Updating the System 8-29

Configuring the System

Use the configuration screens to update system functions.

Using the Configure Screen

This section describes the windows and options available for configuring the system. Access each window by selecting the appropriate button on the Configure screen.

Note For the changes you entered in the Configure screen windows to take effect, you must select **LOG OFF** to exit the software, then restart the software.

Configuring Display Options

Use the Display Options window to specify how text, numbers, times, and dates are displayed. To configure display options, perform the following steps:

Note The system must be in STOP mode to make changes in this window. You must Log off, and log on again, for changes in the Display Options window to take effect.

1. Select **MENU**.
2. At the Menu screen, select **Configure**.
3. Select **Display Options**.
4. Select options from the following table:

Option	Description
Time Format	• Select **12 Hour**. • Select **24 Hour**.
Date Format	• MM/DD/YYYY • DD/MM/YYYY • YYYY/MM/DD
Number Format	• **1,234.56** • **1.234,56**
Language	Select a language. **Note** For Simplified Chinese and Japanese, additional configurations are required. Contact your local technical support provider.

Option	Description
Use barcode rack identifier	To display the sample's location on the system by the rack letter, select **Use barcode rack identifier**. **Note** Select the **Use barcode rack identifier** to enable the Find Last Tube Position feature. Leave this option blank to display the sample's location by position. Position 1 on the carousel displays as Position A on the rack.
Hide Names	To hide patient names on the data review screens, select **Hide Names**. Leave this option blank to display patient names on the data review screens.
Disable Kit Expiration Flag	To disable the Kit Expiration Flag, select **Disable Kit Expiration Flag**. If the Kit Expiration Flag is enabled and the kit is Immunoassay or confirmatory, the Kit Expiration Flag displays and prints with patient results. If the Kit Expiration Flag is disabled and the kit is Immunoassay or confirmatory, Expired displays in blue in the Kit Status field at the KITS window. **Note** The Kit Expiration Flag is enabled when the software is installed, but can be disabled. The Kit Expiration Flag always displays at the Kits window whether it is disabled or not. The Kit Expiration Flag does not display for Allergens.
Number of Characters To Trim From Left of Accession Number	Select this option to trim a letter (or letters) from the left of accession number.
Number of Characters To Trim From Right of Accession Number	Select this option to trim a letter (or letters) from the right of accession number.

5. If you have made all the changes at the Display Options window, select **Save**.

Configuring Auto Dilutions

Use the Auto Dilutions window to specify the automatic dilution factor for out-of-assay-range samples. Specify dilution factors for each test according to the following instructions.

1. Select **MENU**.
2. At the Menu screen, select **Configure**.
3. Select **Auto Dilutions**.
4. Select the **Test Name** field.

   A list of the test codes for all the tests in the system displays.
5. Select a test.

   Note Tests only display if the kit was entered using the 2D or imaging scanner.

   The test displays in the Test Name field.
6. Select the **Dilution Factor** field.

   A list of the valid dilution factors for the test displays.

   Note Samples that require a dilution factor other than those programmed for onboard dilutions may have a manual dilution factor applied to them. When a manual dilution factor is applied to a sample, all tests ordered on that sample are multiplied by that dilution factor.

CAUTION

Do not manually enter a value in the Dilution Factor field. Entering a value that is not supported will perform the assay without any dilutions and display as `> assay limit`. Only those dilution factors listed are supported.

7. Select one of the listed dilution factors. See *Dilution Specifications*, page E-2.

   After selecting the dilution, the Dilution Factor list closes.
8. If all changes have been made at the Auto Dilutions window, select **Save**.

Configuring ID Information

Use the ID Information window to enter customer information. The hospital or laboratory name displays on patient and adjustment reports. To enter this information, perform the following steps:

1. Select **MENU**.

2. At the Menu screen, select **Configure.**
3. Select **ID Information**.
4. In the Customer Name field, enter the hospital or laboratory name.
5. In the **Instrument ID** field, enter the system serial number.
6. If all changes have been made at the ID Information window, select **Save**.

Using the Configuration Settings Window

Use the Configuration Settings window to specify system settings that affect how the system operates in relation to testing and reporting. To configure system settings, perform the following steps:

1. Select **MENU**.
2. Select **Configure**.
3. Select **Configuration Settings**.
4. Select options according to the following table:

Option	Description
Default Sample Tube Type	You can select the tube type normally used. • Primary tube Blood collection tube in which the serum is separated from the blood cells by a gel barrier. Selecting this configuration causes the probe to stop before penetrating the gel barrier. Refer to the *Primary Tube Sample Guide* (Part Number 901835) sent with the system for more information. • Secondary tube Sample tube in which the serum is aliquoted to a different tube. Selecting this configuration causes the probe to move further into the tube before aspirating the sample. **Note** You must make changes to the Default Sample Tube Type setting before placing samples on the system. Otherwise, you will need to log off the software and delete the worklist after changing the default sample tube type.

Option	Description
Automatically Print the Following Reports	Select which report types to print automatically when results are completed. You can select all reports or individual reports. **Note** You must select controls. If you do not select controls, the system does not evaluate the QC results against the selected QC rules or ranges, and the system may not send patient results to the LIS.
Results Statistics	• Mean Displays the mean of the replicates on the Review screen and on the report printout. • CV Displays the % CV of the replicates on the Review screen and on the report printout. **Note** For all replicates to print, you must have Mean and CV selected.
Auto Eject Options	Configures Auto Eject to eject racks automatically. Select whether to eject when samples in a rack are: • All Pipetted • All Resulted • To disable Auto Eject, select **None**. **Note** Available on the IMMULITE 2000 XPi only.

Option	Description
Testing Options	• Reflexive Testing The system will automatically perform another test if the result from the first test falls outside, or within, a specified range. You must select this option to activate reflexive testing. • Auto Dilution Automatically dilutes out-of-assay-range samples. You must select this option to activate Auto Dilution. **Note** Enter dilution instructions on the Auto Dilutions window. See *Configuring Auto Dilutions*, page 8-3. • Confirmatory Testing Enables Onboard Confirmatory testing. See *Automated Hepatitis B Surface Antigen Confirmatory Testing*, page I-4. **Note** Onboard Confirmatory testing requires that Reflexive Testing is selected.
Low Test Flag	Designates when a warning message displays on the Bead or Reagent Status screens based on the number of tests remaining in a bead pack or a reagent wedge. For example, if you enter 10 in this field, a warning displays when a bead pack or reagent wedge has sufficient volume for only nine more tests. This applies to all bead packs and reagent wedges on board.
Large Allergen Low Test Flag	Designates when a warning message displays in the Reagent Status screen based on the number of tests remaining in a 40-test allergen vial. For example, if you enter 10 in this field, a warning displays when an allergen vial has sufficient volume for only nine more tests.

Option	Description
Small Allergen and Confirmatory Low Test Flag	Designates when a warning message displays in the Reagent Status screen based on the number of tests remaining in a 20-test allergen vial. For example, if you enter 2 in this field, a warning displays when an allergen vial has sufficient volume for only one more test.
Allergen Reagent(s) in use	Displays scanned allergy kits. You can select multiple kits. **Note** The system displays selected reagents by default in the Available Tests window.
Allergen Results and Scoring Type	The selections made in this field determine how the results of allergy tests are reported when they are displayed on the screen and printed. • Concentration The system includes the antibody concentration in patient samples in the results for allergy tests. **Note** You cannot deselect Concentration. • Standard Class If selected, the system bases allergy test results on Standard Class scoring criteria. • Extended Class If selected, the system bases allergy test results on Extended Class scoring criteria.
Report Qualitative Infectious Disease Assay Results	• Qualitative Only The system reports Infectious Disease results as either Reactive, Non-Reactive, or Indeterminate. • Qualitative and Ratio The system reports Infectious Disease results as a ratio, and as either Reactive, Non-Reactive, or Indeterminate.

5. After you make all the changes on the Configuration Settings window, select **Save**.

Configuring the LIS

Use the LIS configuration window to configure the system to communicate with the LIS. To enter LIS information in the software, perform the following steps:

1. Select **MENU**.
2. Select **Configure**.
3. At the Configure screen, select **LIS**.
4. Under LIS Host Query Mode, select the type of interface used for communication between the IMMULITE system and the LIS.
   - None
   - Uni-Directional
   - Bi-Directional
   - Bi-Directional Query

     Note Selecting **Bi-Directional Query** enables the Query Control and Re-Query Patients fields.
5. Under LIS Allergen Results and Scoring Type, select the allergy test result information to transmit to the LIS.

   You can select to transmit antibody concentration as well as standard and extended class scoring.

   Note For allergy tests, the system always sends concentration information to the LIS.
6. Enter the appropriate information in the fields based upon the explanations in the following table:

Field	Description
Password	The LIS Password. **Note** Contact your LIS provider for this information.
Receiver ID	A name identifying the LIS. **Note** Contact your LIS provider for this information.
Sender ID	A name identifying the system. **Note** Contact your LIS provider for this information.

Field	Description
Baud Rate	The baud rate (line transmission speed) furnished by the LIS provider. **Note** Acceptable entries include 1200, 2400, 4800, or 9600, or 115200 when connected to the VersaCell system.
COM Parameters	An alphanumeric character identifying the parity bits, and stop bits.
Serial Port	The serial port number for the LIS connection.
Diagnostics	Leave this value 0.

7. Mark the appropriate selections based upon the explanations in the following table:

Option	Description
Hide Sent	Hides results previously sent to the LIS.
Auto Send Patient Results	Automatically sends patient results to the LIS. Results associated with an overdue adjustment, failed control, review range failure, error, and N/A results are not sent. When this option is selected, the Send button on the LIS screen changes to the Auto Send button.
Auto-Send Invalid Adjustment	Automatically sends results to the LIS that are associated with an overdue kit adjustment or an unadjusted kit.
Auto-Send Invalid Control	Automatically sends results to the LIS that are associated with an out-of-range control. If the system evaluates control results based on the QC Multi Rule.
Auto-Send Invalid Range	Automatically sends results to the LIS that are outside the review range configured for each assay in the Test Ranges window.
Auto Diluted Results > Reportable Range	Automatically sends Auto-Diluted test results that are greater than the assay maximum to the LIS.

Option	Description
Autosend Allergy < Reportable Range	Automatically sends allergy results separate from immunoassay results to the LIS. Sends results below the reportable range directly to the LIS. **Note** If the **Auto-Send Invalid Range** check box is selected, the system sends Allergy results below the configured limits to the LIS, and the **Autosend Allergy < Reportable Range** check box is not available.
Auto Send Control Results	Automatically sends control results to the LIS.
Display Controls on LIS Screen	Displays control results on the LIS Data Management screen. The system does not display control results on the LIS Data Management screen unless configured to do so.
Query Controls	**Note** Bi-directional Query must be selected. Provides the ability to send QC orders from the LIS to the system. **Note** Selecting the **Query Controls** checkbox, enables the Re-Query Controls field.

Option	Description
Re-Query Patients	**Note** Bi-directional Query must be selected. Allows the system to requery the LIS when patient tube barcodes are re-read on the sample carousel, allowing test requests to be re-sent. Select one of the following functions from the dropdown list: • No Re-Query – If there is already an order (waiting, in progress, or resulted) for an accession number, the system will not requery for that accession number. • Re-Query All – Even, if there are already orders in progress or waiting for an accession number, test, or dilution factor, the system will query the LIS and will save orders for that accession number/test. • Re-Query New – If there are already orders in progress or waiting for an accession number, test, or dilution factor, the system will query the LIS, but will not save orders for that accession number. If all previous orders for that test have been resulted, the new order will be saved. If orders are received for other tests, or the same test with a different dilution factor, the orders will be saved. **Note** Your LIS system must be able to support the re-query function. Check with your LIS provider.
Re-Query Controls	**Note** Bi-directional Query and Query Controls must be selected. Allows the LIS to be re-queried when control tube barcodes are re-read on the sample carousel, allowing test requests to be re-sent. Select one of the following functions from the dropdown list: • No Re-Query • Re-Query All • Re-Query New **Note** Your LIS system must be able to support re-query function. Check with your LIS provider.

Option	Description
Report Qualitative Assay Results	Select how results of qualitative infectious disease assays are to be sent to the LIS. Results can be sent as either: • Qualitative Only • Ratio Only For the **Displayed on the LIS Screen as** field, select how results display on the system LIS screen. Results can be displayed as either: • Qualitative Only • Qualitative and Ratio For the **Sent aHB and BcM to the LIS as** field, select how aHB and BcM results are sent to the LIS. Results can be sent as either: • Qualitative Only • Concentration Only For the **Display aHB and BcM on the LIS screen as** field, select how aHB and BcM results are displayed on the System LIS screen. Results can be displayed as either: • Qualitative Only • Qualitative and Concentration

8. To configure the system to send the Q action code:
   - In the Controls panel, select **Send Action Code**.
9. After making all the changes on the LIS configuration window, select **Save**.

Configuring IMMULITE 2000 Systems to Send Controls to the LIS

Bio-Rad controls are configurable to send a 5-character or 3-character lot. The default is 3 characters. To configure the IMMULITE 2000 systems to send a 5-character lot to your LIS, perform the following steps:

1. Select **MENU**.
2. Select **Configure**.
3. Select **LIS**.
4. In the Controls panel, select **Send 5 digit lot number**.

FSE Configuration

The FSE (Field Service Engineer) Configuration window is a password-protected screen used by authorized personnel to change the default mode for sample processing. To request a processing mode change, contact your local service provider.

Load Scale

The Load Scale window is a password-protected screen used by authorized personnel. Contact your local service provider.

Instrument Mode

The Instrument Mode window is a password-protected screen used by Siemens personnel. Contact your local service provider.

Resetting the Load Scale

If a discrepancy exists between the consumable indicator on the HOME screen and the actual volume available, reset the load scale by doing the following:

1. Select **STOP**.
2. Select **MENU**.
3. Select **Configure**.
4. Select **Reset Load Scale**.

Note If the system is not in STOP mode, a reminder message is displayed.

5. Select the load scale to reset, using **Previous** or **Next**.

   The Name field changes accordingly with all associated data.

6. After you select the appropriate load scale, select **Reset Scale**.

   A Remove container message is displayed.

7. Remove the container from the selected load scale.
8. Select **OK**.

   The following message is displayed:

   `Select OK to Reset Load Scale, Cancel to Abort.`

9. Select **OK**.

   A resetting load scale activity bar is displayed. When the load scale is reset, a Load Scale has been reset message is displayed.

10. Place the container back on the load scale, and select **OK**.

11. To reset a different container, repeat steps 5 through 10.

    Note To return to the Menu screen without saving the changes, select **Cancel**.

Configuring System Functions

This section allows you to perform the following configurations:

- Define Test Ranges
- Define Allergen Ranges

Defining Test Ranges

Use the Test Ranges screen to specify the reference ranges for test results that display in the Patient Review window and print on the chartable patient report. To specify reference ranges, perform the following steps:

Note Test ranges do not apply to allergens. To view allergen ranges, see *Viewing Allergen Ranges*, page 8-15.

1. Select **MENU**.
2. Select **Test Ranges**.
3. Select a test from the Test Name list.

   The ranges for the selected test display in the range fields. The selected unit of measure displays at the right side of the window.
4. For the Normal range, enter the Low and High limits in the appropriate fields.
5. In the Range 2 through Range 7 fields, enter the additional ranges to be displayed in the Patient Review window.
6. If the system is configured to send results to the LIS automatically, you can enter Low and High values in the Review Range fields.

   If a result is outside of the review range, it is not sent to the LIS.

   If the low and high values of Range 1 (Normal) are within the low and high values of the review range, patient results that are outside of range 1 (normal) are not flagged. Refer to the following example:

   - Normal Range = 0.4 to 4.0
   - Review Range = 0.2 to 6.0
   - Result 5.0

Because the result is within the review range, it is not flagged even though it is higher than the normal range.

7. Select **Save**.

Viewing Allergen Ranges

The Allergen Ranges screen displays the ranges of immunoglobulin concentrations for allergic reactions. Use this screen to view the default reference ranges.

You cannot change the ranges displayed in this screen. They are entered when you scan the 2D barcode on the kit. The ranges in this screen display for allergy tests in the Patient Review screen and on reports. To view reference ranges for allergy tests, perform the following steps:

1. Select **MENU**.
2. Select **Allergen Ranges**.
3. From the Test Name drop-down list, select a test.

   The reference ranges for the kit display in the Class fields. The selected unit of measure displays at the right side of the window.

   The classes of allergic reactions are listed on the left side of the window. The class names are aligned between the fields that contain their range values. For example:

   - The first field in the Standard column contains a 0. The field beneath it could contain 0.20. Class 0 is the name next to these two fields.
   - In the Patient Review screen and on reports, a Standard Class 0 result would be displayed for antibody concentrations of 0 to 0.20 IU/mL.

   Note The Save button is intended for future enhancements.
4. To exit the Allergen ranges screen, select **Save** or **Cancel**.

Configuring Reflexive Tests

Follow the instructions in this section to specify tests to run automatically if a result is either below, within, or above a specified range.

Note Reflexive testing cannot be performed on a manually diluted sample.

Activating Reflexive Testing

To activate reflexive testing, perform the following steps:

1. At the Menu screen, select **Configure**.
2. Select **Configuration Settings**.
3. In the Testing Options box, select the **Reflexive Testing** option.
4. Select **Save**.

Setting up Reflexive Testing

To set up reflexive testing for assays or allergens, perform the following steps:

1. Select **MENU**.
2. At the MENU screen, select **Reflexive Tests**.
3. In the Principle Test Selection box, select a Principle Test Selection option. This selection determines what tests display in the Principle Test field.

Principle Test Selection	Description
Immunoassay – All Available	All assays scanned into system
Immunoassay – Configured for Reflex	Assays configured for reflexive testing
Allergy – All Available	All allergens and universal reagents scanned into the system
Allergy – Configured for Reflex	Allergens/universal reagent combinations configured for reflexive testing

4. Select a **Principle Test**, and if applicable, select a **Universal Reagent**.
5. From the following, select a new range type:
   - Only one **Below** range and one Above range can be configured per assay, or allergen and universal reagent combination.

     The **Below** and **Above** ranges cannot overlap.
   - Unlimited **Within** ranges can be configured if the values do not overlap with the Below and Above ranges.
   - For a qualitative assay, the New Range options are **Non Reactive**, **Indeterminate**, and **Reactive**.

     Only one of each may be added.

6. Select **Add Range**.

   Note For qualitative assays, the Reflex Range field is not available and displays Non Reactive. Proceed to step 8.

7. Enter the **Reflex Range** values based on the type of range that was selected in step 5.
8. In the TEST CATEGORIES box, select **IMMUNOASSAY** or **ALLERGY**.

   If **ALLERGY** is selected, select the appropriate universal reagents.

9. Select the buttons that correspond to the individual reflexive tests for this range (up to 15 tests per reflexive range).

   If necessary, use the Next Page and Previous Page buttons to locate additional tests.

   Note The Do Not Autosend option will be enabled if a reflexive test matching the principle test is selected. Select the Do Not Autosend option to prevent the results of the principle test and the matching reflexive test from being sent to the LIS. For example, if HCG reflexes to HCG and TSH and Do Not Autosend is selected, only the TSH result will be sent to the LIS.

10. To add a dilution for a reflexive test:
    a. Select a test under the Tests Selected heading.
    b. Select **DILUTION**.

       The Dilution Factor window displays.

    c. Select the dilution factor.
11. Select **Save** after selecting all of the necessary reflexive tests.
12. Repeat steps 5 through 11 to configure additional ranges for a principle test, or steps 2 through 11 to order reflex tests for a different assay or allergen.
13. To print the contents of the Current Ranges box, select **Print**.
14. Select **Close** to close the Reflexive Testing Configuration screen.

Editing Reflexive Testing Configurations

To edit existing reflexive testing configurations, perform the following steps:

1. At the Menu screen, select **MENU**, and then select **Reflexive Tests**.
2. Select one of the following options:
   - **Immunoassay - Configured for Reflex**

- **Allergy - Configured for Reflex**

3. Select a Principle Test, and if applicable, select a Universal Reagent.
4. In the Current Ranges box on the right side of the screen, select the range to edit.
5. Select **Edit**.
6. At the Principle Test window, update the reflex range.

Ordering Additional Reflexive Tests for a Range

1. Select the test buttons that correspond to the individual reflexive tests for this range.

   To switch between assays and allergens, select **IMMUNOASSAY** or **ALLERGY** in the TEST CATEGORIES box.
2. After all edits to this range are complete, select **SAVE**.

Adding or Editing a Dilution Factor

1. Under the Tests Selected heading, select the test.
2. Select **DILUTION**.
3. Select the dilution factor.
4. After all edits to this range are complete, select **SAVE**.

Removing a Reflex Test

1. Select the test under the Tests Selected heading, then select **REMOVE**.
2. After all edits to this range are complete, select **SAVE**.

To edit additional reflexive testing configurations, repeat steps as needed.

Deleting a Reflexive Test Range

To delete reflexive test range, perform the following steps:

1. Select **MENU**.
2. Select **Reflexive Tests**.
3. Select one of the following options:
   - **Immunoassay - Configured for Reflex**
   - **Allergy - Configured for Reflex**
4. Select a Principle Test, and if applicable, select a Universal Reagent.
5. In the Current Ranges box on the right side of the screen, select the range to delete.

6. Select **Delete**.
7. Select **Yes**.
8. Repeat steps 3 through 7 to delete additional ranges.
9. To close the Reflexive Testing Configuration screen, select **Close**.

Printing the Current Ranges

1. To print the contents of the Current Ranges box, select **Print**.
2. To close the Reflexive Testing Configuration screen, select **Close**.

Panel Configuration

Use a Panel to group tests that are routinely ordered together. Use the Panel Configuration screen to create a panel or edit an existing panel.

Creating a New Panel

Assign a panel name and up to 100 tests to include in the panel. To create a new panel, perform the following steps:

1. Select **MENU**.
2. Select **Panels**.
3. Select **ADD NEW PANEL**.
4. Enter a panel name in the Panel Name field.

   The panel name can have up to 10 characters.

   Note The panel name must be different from test codes or sort codes used on any connected systems or test codes used on the same system.
5. Select one of the Panel Color buttons, 1 through 15.

   The color selected distinguishes the tests belonging to this panel in the Available Panels window in the Worklist.
6. Select **Test Name**.
7. At the AVAILABLE TESTS window, select **ACTIVE KITS** or **ON BOARD** under Immunoassay, Allergen, or Confirmatory.
   - If **ACTIVE KITS** is selected, every immunoassay or allergy test scanned onto the system displays in the center of the window.
   - If **ON BOARD** is selected, every immunoassay or allergy test physically residing on the system displays in the center of the window.

8. Select a test.
   - For Immunoassay, select the appropriate immunoassay.

     The code for the selected assay displays in the Tests Selected field.
   - For Allergen:

   a. Select the universal reagent, such as SPE, to be used for the allergy test.

   b. Select an allergen test.

      The code for the selected allergen displays in the Tests Selected field.
   - For Confirmatory, see *Appendix I, Hepatitis Confirmatory Testing*.

If replicates are not to be ordered, proceed to step 14. To specify replicates of the tests in the panel, perform the following steps:

9. Select **REPLICATES**.
10. Change the number of replicates to be performed using the arrow buttons.

    The number can also be entered using the keyboard.
11. Select **OK** to enter the number displayed, then close the Replicates window.
12. Repeat steps 8 – 11 for all the tests being added to the panel.
13. To save the entries and close the window, select **OK** in the Available Tests window.
14. At the Panel Configuration window, select a Dilution Factor if needed.
15. Select the test in the Tests Selected field to apply the dilution selected to that test.
16. Repeat steps 14 and 15 for each onboard dilution needed.
17. Select **SAVE PANEL**.

Editing a Panel

To edit an existing panel, perform the following steps:

1. Select **MENU**.
2. Select **Panels**.
3. Select **EXISTING PANELS**.

4. From the Panel Name drop-down list, select the panel to edit, then select **ACCEPT**.

   The panel you select displays in the Panel Configuration window.

Adding a Test to a Panel

To add a test to an existing panel, perform the following steps:

1. Select **Test Name**.
2. At the AVAILABLE TESTS window, select **ACTIVE KITS** or **ON BOARD** under Immunoassay, Allergen, or Confirmatory.
   - If **ACTIVE KITS** is selected, every immunoassay or allergy test scanned onto the system displays in the center of the window.
   - If **ON BOARD** is selected, every immunoassay or allergy test physically residing on the system displays in the center of the window.
3. Select tests to add.
4. Select the number of Replicates.
5. Select **OK**.

Removing a Test from the Panel

At the Panel Configuration window, select the test to remove in the Tests Selected field.

The test changes from black to gray.

Changing the Dilution Factor for an Immunoassay

To Change the Dilution Factor for an Immunoassay in an existing panel, perform the following steps:

1. In the Panel Configuration window, select the dilution factor needed.
2. Select the test in the Test Selected field to which to apply the dilution.
3. In the Panel Configuration window, select **SAVE PANEL** to save the changes entered.

Deleting a Panel

To delete an existing panel, perform the following steps:

1. Select **MENU**.
2. Select **Panels**.
3. Select **EXISTING PANELS**.

4. Select the panel to delete from the Panel Name list.
5. Select **ACCEPT**.

   Information about the selected panel displays in the Panel Configuration window.
6. Select **DELETE PANEL**.
7. Select **Yes**.

Units Configuration

The Units Configuration screen allows the operator to change the reporting units for a specific test. To change from the default units, perform the following steps:

Note Changing the reporting units for a specific assay causes the software to automatically recalculate all results in the database for that assay, including Quality Control results and reference ranges. Subsequent printouts of Quality Control results, export data, results sent to the LIS, or reprints of patient results will display with re-calculated results and the updated units.

1. Select **MENU**.
2. Select **Units**.
3. Select the arrow to the right of Test Name window.

   The drop-down window displays the available tests.
4. Select the test.

   The units options for this particular test display, with the current reporting unit selected.

   Up to 4 different units may display.
5. Select the unit.
6. Select **Save**.
7. Select **Done**.

AutoStart Configuration Screen (IMMULITE 2000 XPi System)

Note This feature is only available on the IMMULITE 2000 XPi system.

The AutoStart Configuration screen allows you to schedule automated maintenance procedures by date and time, and enable or disable automatic substrate dispensing.

Use the AutoStart Configuration screen to define your automatic procedures:

- Select the days of the week for AutoStart to run.
- View control worklists to run during scheduled AutoStart procedures.

To configure the system to AutoStart:

1. Select **MENU**.
2. Select **AutoStart Configuration**.

   The AutoStart Configuration screen displays.
3. Select the days of the week to schedule AutoStart.
4. For each day of the week you selected, enter the time of day to schedule AutoStart.
5. To see the Scheduled QC worklists assigned for a particular day, select **View Worklist** next to the appropriate day of the week.

   Refer to *Scheduling QC Assays for the IMMULITE 2000 XPi*, page 4-16.
6. Select **Substrate Dispense ON** or **Substrate Dispense OFF**.

   Refer to *Automatic Substrate Dispense*, page 8-23.
7. Select **Save**.

Automatic Substrate Dispense

Note When the probe is inactive for more than 2 hours, the operator must manually prime the first time for this routine to begin.

Every 2 hours the Substrate Dispense ON selection automatically moves a reaction tube into the substrate station and dispenses substrate material into the tube, then clears the tube off of the system.

The Substrate Dispense OFF selection disables the substrate from automatically dispensing. This option is only recommended if you perform automated maintenance tasks, and you do not run the automated QC Worklist. Additionally, if the system is running tests until AutoStart begins, the substrate will have recently dispensed during the course of processing tests.

Reports

To configure reports, perform the following steps:

1. Ensure the system is in STOP mode.
2. Select **REPORTS**.
3. Select **CONFIGURE REPORT**.
4. Select the **Short Format** or **Chartable Format** option.

   If you selected **Short Format**, select **SAVE**, then select **CLOSE**.
5. If you selected Chartable Format, select **Edit Template** or select **Restore Template**.

   If you select Restore Template, refer to *Restoring the Template*, page 8-27.

   If you select Edit Template, refer to *Editing Chartable Patient Reports* below.

Editing Chartable Patient Reports

The Chartable Patient Report may be customized with regard to what information is printed on the report, how that information is labeled and where specific information appears on the report.

To edit a chartable report, perform the following steps:

1. To resize the Property Toolbox, select one of the 4 corners of the box.
2. When the black double arrow displays, drag the box to increase or decrease the box size.

   Note Do not close the Property Toolbox. To redisplay it, press the F4 key on the keyboard.
3. To add guidelines to the template, select the **View Grid** button on the toolbar. To remove guidelines from the template, select the **View Grid** button again.

4. To expand the design window, select the **Full Screen** button on the toolbar. To return the design window to normal, select the **Full Screen** button again.
5. Select a field label to edit it.

   A text box surrounds the field label.

Configuring the Laboratory Name

The laboratory name is stored in the database and must be configured separately, as follows.

Note Do not modify the section headings, PageHeader, GroupHeader, Detail, PageFooter, or GroupFooter1.

1. Select the appropriate field or field label.

   A text box surrounds the field.
2. In the Property Toolbox, select the appropriate property (for example Caption).
3. Edit the field.

   If a field extends beyond the printable range, a red line displays, indicating that each page will print on two pieces of paper. Adjust fields accordingly to avoid this behavior.
4. Press **Enter**.
5. To edit the font type and size, select the Font section in the Property Toolbox.
6. To view the changes, select **PREVIEW**.
7. To print a sample report, select **Print** while previewing the template.
8. To save any changes, select **SAVE**.

Enabling or Disabling Fields

Follow the instructions below to enable or disable fields and field labels in the chartable patient report.

1. Ensure the system is in STOP mode.
2. Select **REPORTS**.
3. Select **CONFIGURE REPORT**.
4. Select **Chartable Format**.
5. Select **Edit Template**.

   The Design screen displays.

6. Select the appropriate field or field label.

   A text box surrounds the field.

7. Select the Visible field in the Property Toolbox.

   A drop-down arrow displays.

8. Select the drop-down arrow and select and option:

   Although hidden on the report, the field label displays in the template.

   - **True** - to enable the field.
   - **False** - to hide the field.

9. To view the changes, select **PREVIEW**.
10. To print a sample report, select the **Print** while previewing the template.
11. To save any changes, select **SAVE**.
12. Repeat steps 6 through 11 as necessary for all fields and field labels.

Moving Fields

Follow the instructions below to arrange field labels and fields.

1. Ensure the system is in STOP mode.
2. Select **REPORTS**.
3. Select **CONFIGURE REPORT**.
4. Select **Chartable Format**.
5. Select **Edit Template**.

   The Design screen displays.

6. Select the appropriate field or field label.
7. Select a field or field label to move it to the appropriate position.

   To select multiple fields, select and hold the **CTRL** key while selecting the fields/field labels, or select and drag a selection box around the fields/field labels.

8. While pressing the mouse button, drag the field or field label to the new location.
9. Release the mouse button.

   The field label displays in the new location

10. To change the size of a field or field label, select the field and select and drag the black squares to resize the field.

11. Select **PREVIEW** to view the changes.
12. Select the **Print** icon while previewing the template to print a sample report.
13. Select **SAVE** to save any changes.

    Note Text and data in fields will word wrap in the report. Avoid overlapping fields on the template. Overlapping fields may result in overlapping text and data in the chartable patient report.

Manually Printing the Chartable Patient Report

Follow the instructions below to manually print the chartable patient report. This feature allows the operator to test-print the chartable patient report without waiting for it to automatically print.

1. Ensure the system is in STOP mode.
2. Select **REPORTS**.
3. Select **PRINT REPORT**.
4. Enter the Accession Number.
5. Select the Patient Name from the dropdown list.

   The report only prints if all tests are resulted for the selected accession number and patient.
6. Enter any additional information to display on the report in the Comment field.
7. Select **PRINT**.

Restoring the Template

Follow the instructions below to delete the customized template and overwrite it with the Siemens provided template.

1. Select **REPORTS**.
2. Select **CONFIGURE REPORT**.
3. Select **Restore Template**.
4. Select **YES** to restore the Siemens template, or select **NO** to cancel.

Changing Windows Settings

The Windows settings are configured by the Siemens personnel when the system is installed. Refer to *Resetting the Date, Time, and Time Zone*, page 8-28 and *Changing the Sound*, page 8-28 to adjust these settings.

Resetting the Date, Time, and Time Zone

To reset the computer's date and time, perform the following steps:

Note For Daylight Savings time changes, you do not need follow these instructions. The computer is programmed to handle the change.

1. Select **Start** at the lower left corner of the screen.

   Note Do not change the Regional Settings on the Control Panel.

2. Use the trackball to highlight **Settings**, and then select **Control Panel**.

   The Control Panel screen displays the Control Panel icons.

3. Double-select the **Date/Time** icon.
4. On the Date/Time Properties window, select the **Time Zone** tab.
5. If the time zone is incorrect, before setting the date and time, perform the following steps:
   a. Select the down arrow to the right of the time zone.

      A list of time zones display.

   b. Select the time zone.
6. Select the **Date & Time** tab.
7. If the date is incorrect, perform the following steps:
   a. If the month is incorrect, select the arrow to the right of the month field and highlight the current month.
   b. If the year is incorrect, use the up and down arrow buttons to the right of the year field to display the current year.
   c. If the day of the month is incorrect, on the calendar, select the current date.
8. If the time is incorrect, enter the current time in the time field.
9. Select **OK** to close the Date/Time Properties screen.
10. To close the Control Panel, select the Close button (**x**) in the upper right corner.

Changing the Sound



CAUTION
Do not use the Windows NT volume control located on the desktop task bar. A known Windows issue may adversely affect the operating system.

Sounds are used to call attention to the system. Use the volume controls located on the monitor to raise or lower the sound volume or turn the sound off.

Calibrating the Touchscreen

To calibrate the touchscreen, perform the following steps:

1. Select **Start** at the lower left corner of the screen.
2. Use the trackball to highlight **Settings** and select **Control Panel**.

   The Control Panel screen displays showing the Control Panel icons.
3. Double-select the **Elo Touchscreen** icon.

   The Touch Selection window displays.
4. Select touch calibration icon.

   The Touch Calibration screen displays.
5. Follow the instructions on the screen, selecting the target.

   The following message displays:

   ```
   Touch the screen.
   Does the cursor follow your fingertip?
   ```
6. Touch the target once and wait for the next target to display
7. Select the check-mark button.

   The Touch Calibration screen closes and the Touch Selection screen redisplays.
8. Select **OK**.

   The Touch Selection screen closes.
9. To close this screen, select the **Close** button (x) in the upper right corner of the Control Panel.

Updating the System

The system arrives with the latest version of the system software installed. You will be notified when CD ROMs containing software updates or new releases are available. At that time, you may order the update. To install new software, follow the instructions accompanying the CD.

9 Allergy

Assay Overview 9-1

Allergy Kits Overview 9-1

Adjustor Antibody 9-2

Control Antibody 9-2

Universal Reagent Wedges and Universal Bead Packs. 9-2

Allergens. 9-3

Allergen Wedges 9-3

Maintaining Allergen Wedges 9-3

Onboard Stability of Kit Components 9-3

Loading Allergens and Allergen Wedges. 9-4

Viewing Allergens Onboard 9-7

Checking the Status of Wedges and Bead Packs 9-7

Reagents Screen. 9-8

Background color 9-8

Error messages 9-9

Viewing Wedge Detail. 9-10

Replacing Allergen Wedges 9-10

Managing a Worklist 9-13

Adding Allergen Adjustors to the Worklist 9-13

Checking the Adjustment Validity 9-15

Adding Controls to a Worklist 9-15

Defining Allergen Controls 9-15

Allergy Kit Controls 9-16

Specific-Allergen Controls 9-16

Barcoded Controls 9-17

Adding Patients to a Worklist. 9-18

Barcoded Patient Samples 9-19

Selecting a Panel 9-21

Assigning Tests to an Entire Rack 9-21

Results. 9-22

Allergy

The allergy assay is similar to an infectious disease assay. It measures the amount of immunoglobulin to a specific allergen in the serum of a patient. Allergy testing uses a stored master curve and must be adjusted. Adjustments are validated using the same guidelines for immunoassays and Quality Control materials to verify performance.

The following is specific to allergy testing:

- Allergy testing uses Universal Reagents.
- The specific allergen reagents are stored in vials that must be placed in an Allergen Wedge on the Reagent Carousel.
- The allergy testing curve is point-to-point.
- Results can be reported as classes.
- The Quality Control materials.

For the most up-to-date information, always check the Instructions for Use (IFU) that are included with allergy kits.

Assay Overview

Unlike the other assays, the allergens are not bound to the bead. Instead, they are liquid and stored in barcoded vials that fit into the Allergen Wedge on the Reagent Carousel.

The reagent in a Universal Wedge incorporates streptavidin/biotin binding characteristics and uses:

- Allergen-Specific Immunoglobulin Streptavidin-coated beads
- Immunoglobulin Adjustors L and H, and controls 1 and 2
- Reagent Wedge – alkaline phosphatase-labeled anti-Immunoglobulin
- Specific Immunoglobulin Adjustor Antibody – biotinylated adjustor allergen antibody
- Specific Control Antibody – biotinylated control allergen antibody

Note Allergy on IMMULITE 2000/2000 XPi systems is a 2-cycle assay.

Allergy Kits Overview

Every kit contains a reagent wedge that you must load on the system before running tests for that kit.

Check the kit IFU for:

- Barcode labels for adjustor tubes
- Adjustor antibody
- Control antibody
- Controls
- Barcode labels for control tubes

For more information about kits, see *Managing Kits*, page 2-23.

Adjustor Antibody

The following describes the Adjustor Antibodies in an Allergy kit:

- An adjustor antibody vial contains 40 tests.
- Each adjustor antibody vial has a corresponding 2D barcode that contains lot-specific information about the adjustor antibody.
- You must scan the 2D barcode before loading the adjustor antibody vial into an allergen wedge.
- You must load the adjustor antibody in an allergen wedge and place the wedge on the system when running an allergy kit.

Control Antibody

The following describes the Control Antibody in an Allergy kit:

- A control antibody vial contains 40 tests.
- Each control antibody vial has a corresponding 2D barcode that contains lot-specific information about the control antibody.
- You must scan the 2D barcode before loading the control antibody vial into an allergen wedge.
- You must load the control antibody in an allergen wedge and place it on the system when running controls on allergy tests.

Universal Reagent Wedges and Universal Bead Packs

The Universal Reagent Wedge in allergy kits contains an anti-immunoglobulin reagent used for allergy tests with all allergens. A Universal Reagent Wedge contains 600 tests of alkaline phosphatase (enzyme)-labeled anti-immunoglobulin. Place the reagent wedge on the Reagent Carousel.

A Universal Bead Pack contains 200 streptavidin-coated beads. Place the bead pack on the Bead Carousel. A kit contains a total of 3 bead packs.

To check the status of the allergen reagent wedges, see *Checking the Status of Wedges and Bead Packs*, page 9-7.

Allergens

The following describes the Allergens:

- Allergen vials contain 20 or 40 tests, based on the allergen type.
- To test samples for a broader range of allergic reactions, use vials that contain several allergens (panels).
- To test patient samples for an allergy, you must place a vial containing the appropriate allergen in an allergen wedge on the reagent carousel.
- Each allergen Vial has a 2D barcode that you must scan.

Allergen Wedges

The following describes the Allergen Wedges:

- Allergen wedges are the wedge-shaped frames that hold the allergen vials used in allergy testing. See *Figure 9-2*.
- An allergen wedge can hold up to 6 allergen vials.
- Before placing the vial in the allergen wedge, replace the cap on each allergen vial with a septum cap.
- To enter information about the contents of an allergen wedge into the database, scan the wedge and vial barcodes with the imaging scanner.
- Allergen wedges also have a barcode on the edge, like a reagent wedge, so their position on the reagent carousel can be identified by the sample/reagent barcode reader.

Maintaining Allergen Wedges

This section provides information about testing Allergens on IMMULITE 2000/2000 XPi systems. For more information about wedges and bead packs, see *Maintaining Reagent Wedges and Bead Packs*, page 2-13.

Onboard Stability of Kit Components

Allergen Kit components can remain on the system for 90 days. Kit components should not be used after the expiration date printed on the kit label.

To extend the life of infrequently used allergens, remove the vials from the system after each use, cap them with a new standard cap to minimize evaporation, and refrigerate.

Allergens stored under these conditions (refrigerated and protected from air exposure) may be used until the expiration date printed on the vial label. When using the allergen vial again, replace the standard cap with a new septum cap.

For additional storage information, see the IFU.

Loading Allergens and Allergen Wedges

If an allergy kit is loaded, scan at least one allergen wedge and place it on the reagent carousel before running allergy tests.

Testing patient samples for immunoglobulins requires specific allergens. You must scan the vials containing specific allergens into the system individually using the imaging scanner to scan the 2D barcode.



WARNING

Do not take the allergen wedges apart. If the allergen wedges are taken apart and re-assembled incorrectly, such as incorrectly matching the pieces together, the system will pipette from the wrong allergen vial.

Each allergen wedge is labeled with one barcode on the spine and one on the inner black portion. The barcode labels must match. If the barcodes do not match, the wedge location and contents will not be correctly recorded and the vials will be incorrectly pipetted.

To load an allergen wedge, perform the following steps:

1. Scan the 2D barcode for each allergen vial to load in the allergen wedge.

   Note The manufacturer flags allergen vials with the 2D barcode label before shipping them. The 2D barcode contains all the information the system requires to use that vial for allergy tests. Barcode labels identifying the same allergen vial have the same alpha-numeric code, such as D1.

The allergen kit window displays information about the allergen.

Field	Explanation
Allergens button	Select this button to display information about immunoassay kits in the database. The button toggles to Kits.
Find button	Select this button to enter an allergen code and lot to display information about that allergen.
Previous AGN or Next AGN	Select these buttons to display information for the previous allergen or next allergen in the database. Allergen information in the database is displayed for one allergen at a time, in alphanumerical order by allergen code.
Allergen Code	Code used to indicate a specific allergen.
Allergen Lot	Allergen Lot Number
Allergen Status	Current allergen status: • Expired – the allergen is expired • Valid – the allergen is not expired
Allergen Expiration Date	Allergen expiration date.

Note When running an adjustor, one of the allergen wedges loaded on the reagent carousel must contain 1 adjustor antibody.

2. Remove the 2D barcode labels from the vials scanned in step 1.

   Ensure the standard barcodes remain affixed to each vial.

3. Replace the cap on each allergen vial with a septum cap, then place the vial in the allergen wedge.

Figure 9-1: Septum Allergen Vial Cap and Standard Allergen Vial Cap

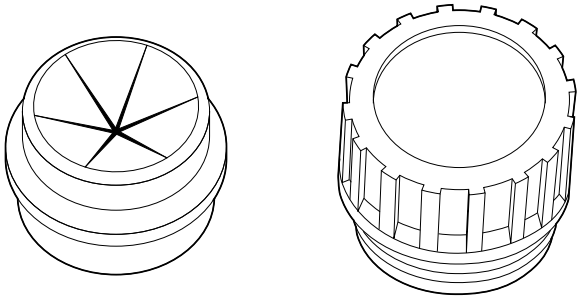

Ensure the barcode on each allergen vial faces out, so it is visible when the allergen wedge is closed.

Note When storing opened allergen vials off the system, replace the septum cap with a new standard cap to prevent evaporation. When using the allergen vial again, replace the standard cap with a new septum cap. For storage information, see the IFU.

For an example of how to insert the vials into the wedge, see *Figure 9-2*.

Figure 9-2: Loading Vials in an Allergen Wedge

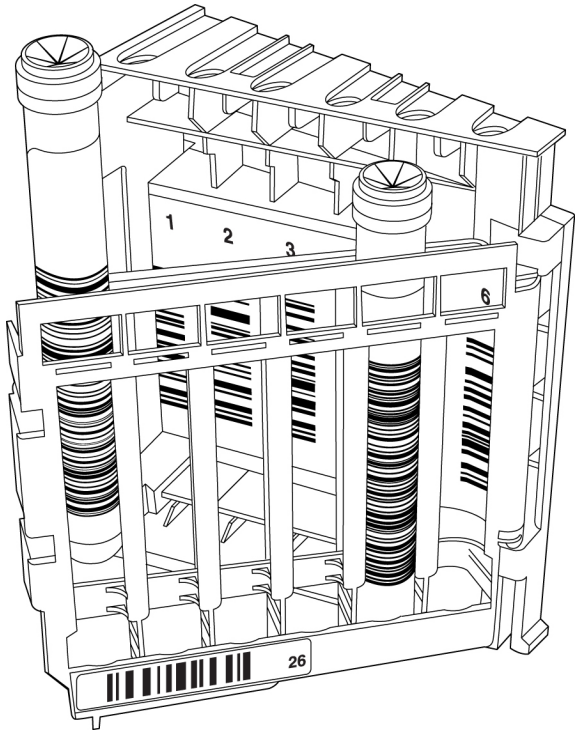

4. Hold the scanner steady, about 13 cm (5 inches) from the allergen wedge, being sure not to obscure any of the barcodes on the allergen wedge or the allergen vials.
5. Press and hold the trigger button on the scanner.
6. Point the scanner beam at the center of the allergen barcodes.

   The system should read the allergen barcodes, the outside allergen wedge barcode, and any barcodes behind the empty vial spaces in a single scan.

   The Allergen Wedge Detail window displays details about the allergen wedge scanned.

Note If any information in the Allergen Wedge Detail window displays in red, a scanner misread occurred. Scan the allergen wedge again.

7. To close the Allergen Wedge Detail window, select **Close**.

   A message displays stating not to swap allergen vials.

8. Select **OK**.

WARNING
If the allergens are changed or the allergen vials are rearranged in an allergen wedge previously scanned, scan the allergen wedge again before loading it on the system. Failure to scan the allergen wedge again may result in a false negative.

9. Select a position on the carousel to load the allergen wedge.
10. Load the allergen wedge on the reagent carousel. See *Replacing Allergen Wedges*, page 9-10.

Note To run allergy tests, the allergen wedge for the allergy kit must be on the reagent carousel.

Viewing Allergens Onboard

To view information about the Allergens currently onboard the system, perform the following steps:

1. If the system is not in RUN mode, select **RUN**.
2. On the horizontal toolbar, select **MENU**.
3. Select **Allergens Onboard**.

Checking the Status of Wedges and Bead Packs

To check the status of wedges, perform the following steps:

1. If the HOME screen is not displayed, select **HOME** to display it.
2. Select the **REAGENTS** carousel.

   The Reagents screen displays.

3. Using the information in the Reagents screen, determine which allergen wedges or universal reagent wedges on the Reagent Carousel need to be replaced.

   See *Reagents Screen*, below.

4. If no wedges need to be replaced, check the status of the universal bead packs.

   See *Checking the Status of Bead Packs*, page 2-18.

Reagents Screen

The Reagents screen displays the status of all allergen wedges on the reagent carousel. The Reagents screen displays the following information:

- Allergen wedge IDs
- Allergen vial status for each Allergen wedge
- Error messages
- Adjustment status (See *Background color* below.)
- Number of tests remaining in each compartment of a reagent wedge
- Wedge positions on the reagent carousel
- Current kit deactivation status

Wedges display in alphanumeric order by test code, not by their positions on the reagent carousel. Each of the 24 squares on the Reagents screen represent a wedge on the reagent carousel. In allergen wedge squares, the fields labeled 1–6 represent the positions of allergen vials and indicate their status.

Background color

On the Reagents screen, the color of each square indicates the status of a wedge. In allergen wedge squares, the color of each vial field indicates the status of that vial. The color of an allergen wedge square reflects the highest priority error for that allergen wedge.

The following table lists the background colors and the status associated with each color:

Background Color	Status
White	No errors
Diagonal lines	Deactivated kit
Gray	Empty position on the Reagent Carousel or in an Allergen Wedge

Background Color	Status
Light brown	An error condition exists. Example errors include: • The reagent wedge has a few tests remaining. • An allergen vial is expired. • The adjustment is overdue for this kit.
Red	An error condition exists that requires immediate attention. Example errors include: • The kit barcode was not scanned into the system. • An allergen vial is empty. • An allergen wedge was not scanned into the system. • A matching bead pack is not onboard the system. • The kit was never adjusted. • Kit is expired.

Error messages

If an error occurs for an allergen wedge, it displays in the square for the wedge on the Reagents screen:

- A plus (+) sign at the right of the error message indicates that a second error is associated with that wedge.
- Two plus (++) signs indicate that 2 or more additional errors exist for that wedge.

  You can view details about a wedge in the Allergen Wedge Detail windows. See *Viewing Wedge Detail*, page 9-10.

The following table lists some examples of errors and how they display in the Reagents screen:

Error Message	Examples
Kit Expired +	The kit is expired, and either the reagent wedge or bead pack has expired, or an adjustment is due.
Kit Expired + +	The kit has expired, and both the reagent wedge and bead pack have expired.
Adjustment Due +	An adjustment is due, and the number of tests remaining is low.

Viewing Wedge Detail

You can view all details for a wedge using the Allergen Wedge Detail window. The information in this window includes a list of errors that have occurred for the wedge.

To display the Detail window for a wedge while the system is in RUN mode, select the square for the wedge in the Reagents screen.

To open the Allergen Wedge Detail window if the system is in PAUSE or STOP mode, perform the following steps:

1. Select **HOME**.
2. Select the **REAGENTS** carousel.

   The Reagents screen displays.
3. Select **ROTATE**.

   The button changes to **REVIEW**.
4. Select the square corresponding to the allergen wedge to view.

   The Allergen Wedge Detail window displays.
5. Select **Close** to close the window.

Replacing Allergen Wedges

WARNING
Handle reagent and allergen wedges carefully to avoid agitation that might introduce bubbles. Bubbles in the reagent and allergen wedges can potentially cause incorrect results. Prior to processing samples, carefully inspect the wedges to ensure all bubbles are eliminated. Remove the reagent carousel with care. Improper handling of the reagent carousel can introduce bubbles in the reagent wedge.

To replace an allergen wedge, perform the following steps:

1. Open the reagent access panel on the top cover, then open the small reagent carousel lid.

   Note If you open the large reagent carousel lid, you must rescan every allergen wedge before running tests.

Depending on the type of assays in progress, one of the following messages may display:

```
Sample pre-treatment assay detected on board. If you put
the instrument in pause mode you will need to close all
doors and press RUN in x minutes and xx seconds. Would you
like to put the instrument in pause now?
[Yes]  [No]
```

```
Sequential assay detected on board. If you put the
instrument in pause mode you will need to close all doors
and press RUN in x minutes and xx seconds. Would you like
to put the instrument in pause now?
[Yes]  [No]
```

2. To continue, select **Yes**.

   The system enters Reagent PAUSE Mode, and the Reagent screen displays.

3. Select the square for the allergen wedge to replace.

   The reagent carousel rotates so that the selected wedge is in front of the silver arrow.

4. Remove the wedge by lifting the narrow end of the wedge near the center of the carousel, tilting the wedge back on its opposite end.

5. Slide the wedge toward the center of the carousel until the slot clears the tab on the carousel.

   The wedge should lift out easily.

   Note When adding an allergen wedge, load allergen vials into the wedge, scan it using the imaging scanner, and perform the following steps to add it to the reagent carousel. Refer to *Loading Allergens and Allergen Wedges*, page 9-4.

6. Inspect the new allergen vials for moisture and bubbles.

7. Dry or replace the septum caps on the allergen vials and dry any liquid on top of the allergen wedge.

8. If you observe bubbles, remove the bubbles prior to placing the system into run.

9. Place the new wedge between the carousel dividers with the barcode facing *out*.

Figure 9-3: Loading a Reagent Wedge

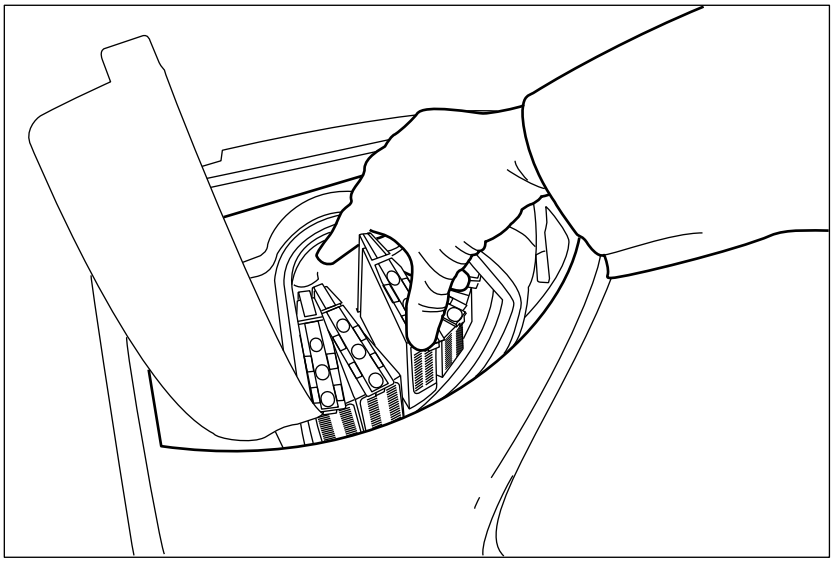

10. Tilt the side of the wedge with the barcode label down so the tab on the reagent carousel locks into the wedge slot under the barcode label.

Figure 9-4: IMMULITE System Wedges

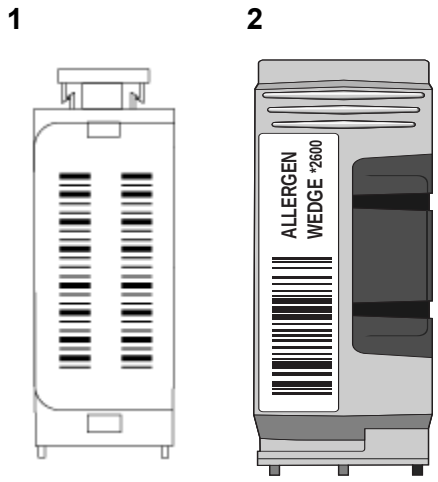

1. Reagent wedge, side view
2. Allergen wedge, side view

11. Press down on the narrow side of the wedge to lock it into place.
12. Close the small reagent carousel lid.

13. Apply pressure until it clicks into place.
14. Close the reagent access panel on the top cover.
15. To update the reagent status window, select **RUN**.

    Note If the kit barcode for a loaded reagent wedge was not entered, an error message displays in the reagent status window. If a loaded allergen wedge has not been scanned, `Allergen Wedge in position` *nn* `has not been scanned in before transitioning to Run` displays.
16. Select **Close** to close the Reagent Status window and return to the Home window.

Managing a Worklist

Adding Allergen Adjustors to the Worklist

Allergy assays use a stored master curve and must be adjusted before testing or running controls and patient samples.

Running adjustments requires the following materials:

Adjustors	Two vials (Low and High) aliquoted into barcoded tubes, labeled ADJUSTOR L and ADJUSTOR H. Place the adjustors on the sample carousel.
Adjustor Antibody	A biotinylated adjustor allergen antibody in a barcoded tube. This tube contains 2.75-mL of immunoglobulin antibody. Place the tube in the Allergen Wedge on the Reagent Carousel.
Universal Bead Pack	Containing 200 streptavidin-coated beads. Place the bead pack on the Bead Carousel. **Note** A kit contains a total of 3 bead packs.
Universal Reagent Wedge	Containing 600 tests of alkaline phosphatase (enzyme)-labeled reagent. Place the wedge on the Reagent Carousel.

To add adjustors to the worklist, perform the following steps:

Note Load Adjustors with barcodes, and select **RUN** before proceeding with the following steps.

1. Select **WORKLIST**.
2. If the ADJUSTOR button is not highlighted, select **ADJUSTOR**.
3. Using **Previous** or **Next,** find the record with the adjustor's lot number in the Adjustor Lot # field and 01 in the Adjustor Level field. This is for ADJUSTOR L.
4. Enter the kit lot number in the **Kit Lot #** field.
5. Enter the lot number for the adjustor antibody in the **Adj Allergen Lot #** field.
6. Select **ACCEPT ADJUSTOR**.

   The next barcode record displays.
7. Using **Previous** or **Next,** find the record with the adjustor's lot number in the Adjustor Lot # field and 02 in the Adjustor Level field. This is for ADJUSTOR H.
8. Enter the kit lot number in the **Kit Lot #** field.
9. Enter the lot number for the adjustor antibody in the **Adj Allergen Lot #** field.
10. Select **ACCEPT ADJUSTOR**.
11. Select **Display/Edit**.

    The Worklist Display/Edit screen displays.
12. In Sort List By field, select **Adjustors**.

    The adjustors display at the top of the worklist.

    The information from adjustor barcode labels displays in the ACCESSION # column of the Worklist.

    - The first 2 characters (~A), identify the tube as an adjustor.
    - The next 3 characters identify the test type.
    - The next 5 characters identify the adjustor lot and level (the first 3 identify the adjustor lot and the last 2 identify the level: 01 for low and 02 for high).

If the adjustor barcode is damaged or missing, perform the following steps:

1. Select **ADJUSTOR**.
2. Select **New**.

3. Enter the kit lot number, adjustor lot number, the adjustor level, and Adj Allergen Lot #.
4. Select **Assign Tube Position**.
5. Under **Select Rack To Use**, select the letter corresponding to the sample rack where the sample is located.

   Under **Select Position To Use,** a graphical depiction of the positions on the sample rack displays. Standard samples are displayed as circles, and tube top sample cups (IMMULITE 2000 XPi only) and microsamples are displayed as squares. The sample status is indicated by the color of the numbered circle or square. Refer to the key for the status associated with each color.
6. Under **Select Position To Use**, select the white circle or square where the sample is located.

   The position turns red and the rack and position display at the bottom of the window.
7. Select **OK**.

   The Worklist entry screen displays. The tube position (rack and number) displays to the right of the **Assign Tube Position** button for this sample.

Checking the Adjustment Validity

To check the adjustment validity, perform the following steps:

1. Review the quality control results.
2. Review the slope.
3. Review the intercept.

The sandwich assay guidelines apply for allergy assays. The slope should fall within established slope range and the intercept should generally fall below 30% of the master curve low adjustor CPS.

Adding Controls to a Worklist

Note When running an allergy kit control, do not enter any other tests.

Defining Allergen Controls

You can run 2 different kinds of allergy controls:

- Allergy kit controls
- Specific-allergen controls

Allergy Kit Controls

This type of control tests the performance of the universal allergy kit. These controls are provided with allergy kits. To run these controls, the Specific-IgE Control Antibody provided with that kit must be entered and loaded.

Specific-Allergen Controls

These controls test the performance of a particular allergen. Specific-allergen controls are available for the most common allergies. To run these controls, the allergen being tested must be entered and loaded.

Running controls requires the following materials:

Controls	Two levels of immunoglobulin concentration 1 and 2 are included in the kit. Aliquot the controls into barcoded tubes and place them on the Sample Carousel.
Control Antibody	A biotinylated control allergen antibody in a barcoded tube. This tube contains 2.75-mL of immunoglobulin antibody. The tube is placed in the Allergen Wedge on the Reagent Carousel.
Universal Bead Pack	Containing 200 streptavidin-coated beads. The bead pack is placed on the Bead Carousel. **Note** A kit contains a total of 3 bead packs.
Universal Reagent Wedge	Containing 600 tests of alkaline phosphatase (enzyme)-labeled reagent placed on the Reagent Carousel.

To add control tests to the Worklist, perform one of the following procedures:

- *Barcoded Controls*.
- *Controls Without Barcodes*, page 2-42.

Barcoded Controls

To manually add control tests to the Worklist, perform the following steps:

Note Load control samples with barcodes and select **RUN** before proceeding with the following steps.

1. On the toolbar, select **WORKLIST** to display the Worklist window.

   Note For an IMMULITE 2000 system, if the system is paused while viewing the Worklist Entry window, the window is cleared.

2. Select **Previous** or **Next** to locate the control record for Control Level 1 or 2.

   If the barcode is damaged or missing, refer to *Controls Without Barcodes*, page 2-42.

3. Enter the tests to run on the control sample:

   a. Select **TESTS** to open the Available Tests window and select the tests to run.

   Note Select Allergen **ACTIVE KITS** to view all Allergy kits entered in the database.

   b. Select Allergen **ON BOARD**.

      A button for every available allergy test displays in the center of the screen. Selections for universal allergy reagents display below the Test Categories field.

   c. Select the universal reagent (SPE or SPG) to use for the allergy test added to the worklist.

      ConIgE or ConIgG displays in the AVAILABLE TESTS screen.

   d. Select the button for the allergy control to add to the worklist.

   Note To remove an allergy test, select the universal reagent, then select the button for the allergy test to remove.

4. If needed, specify replicates of the tests added to the worklist:

   a. Select a test in the Tests Selected field, then select **REPLICATES** to display the Replicates window.

   b. Enter the number of replicates to perform using the keyboard.

   c. Select **OK** to enter this number and close the Replicates window.

5. When finished selecting the controls, select **OK** in the Worklist – Available Tests screen to save the entries and return to the Worklist entry screen.

   The controls selected display in the Tests Ordered field in the Worklist window.

Note To remove a test from the **Tests Ordered** field, select the test name. The test name turns gray.

Note To activate a test, select the test name. The test name turns black.

6. If more than one kit lot for an assay is onboard the system, enter the lot number for the control antibody in the **Agn Lot #** field and the **Kit Lot #** field to run the control for a particular lot of that assay.

   Note You must select **ACCEPT CONTROL** for the worklist entry to be accepted. If you do not, the worklist entry is deleted.

7. Select **ACCEPT CONTROL**.

   Information about the other Control Level displays in the Worklist window.

8. To finish ordering controls, repeat steps 3 – 7 for the other Control Level.

9. Select **Display/Edit**.

   The Worklist Display/Edit screen displays.

10. Select **UPDATE SCREEN** and verify that the controls added display in the worklist.

Adding Patients to a Worklist

Running patient samples requires the following materials:

Patient Samples	loaded on the Sample Carousel.
Barcoded Specific Allergen Vials	loaded in the Allergen Wedge placed on Reagent Carousel. Each vial contains a specific biotinylated allergen. **Note** A vial contains either 20 or 40 tests.
Universal Bead Pack	Containing 200 streptavidin-coated beads. The bead pack is placed on the Bead Carousel. **Note** A kit contains a total of 3 bead packs.
Universal Reagent Wedge	Containing 600 tests of alkaline phosphatase (enzyme)-labeled reagent placed on the Reagent Carousel.

Note For details about loading samples, see *Managing Sample Racks*, page 2-1.

To add patient tests to the Worklist, perform one the following procedures:

- *Barcoded Patient Samples*.
- *Damaged or Missing Patient Barcodes*, page 2-46.

Barcoded Patient Samples

To add patients to the Worklist, perform the following steps:

Note Load patient samples with barcodes and select **RUN** before proceeding with the following steps.

1. On the toolbar, select **WORKLIST**.

   The Worklist entry screen displays.

   Note For an IMMULITE 2000 system, if the system is paused while viewing the Worklist entry screen, the screen is cleared.

2. Select **Previous** or **Next** to locate the patient record to review.

   If the barcode is damaged or missing, refer to *Damaged or Missing Patient Barcodes*, page 2-46.

3. Enter the tests to run on the patient sample:
   a. Select **TESTS** to open the Available Tests screen and select the tests to run.

   Note Select Allergen **ACTIVE KITS** to view all Allergy kits entered in the database.

   b. Select Allergen **ON BOARD**.

      A button for every available allergy test displays in the center of the screen. Selections for universal allergy reagents display below the Test Categories field.

   c. Select the universal reagent to use for the allergy test added to the worklist.
   d. Select the button for the allergy test to add to the worklist.
   e. Continue selecting universal reagents and tests for each allergy test to add to the worklist.

   Note To remove an allergy test, select the universal reagent, then select the button for the allergy test to remove.

4. If needed, specify replicates of the tests added to the worklist:
   a. Select a test in the Tests Selected field, then select **REPLICATES** to display the Replicates window.

b. Enter the number of replicates to perform using the keyboard.

c. Select **OK** to enter this number, then close the Replicates window.

d. Repeat this process for all tests that require replicates.

5. When finished selecting tests, select **OK** in the Worklist – Available Tests screen to save the entries and return to the Worklist entry screen.

   The tests selected display in the Tests Ordered field in the Worklist window.

   a. Enter the patient antibody in the **TESTS** field, then select **Enter**.

   b. Continue until all tests are ordered.

      Tests may be entered one at a time in the Worklist entry screen.

6. To remove a test from the **Tests Ordered** field, select the test name.

   The test name turns gray.

7. To activate a test, select the test name.

   The test name turns black.

8. If more than one kit lot for an assay is onboard the system, you may choose a particular lot by entering the lot number for the patient antibody in the **Agn Lot #** field and the **Kit Lot #** field.

   Note You must select **ACCEPT PATIENT** for the worklist entry to be accepted. If you do not, the worklist entry is deleted.

9. Select **ACCEPT PATIENT**.

   Information about the next barcoded sample on the sample carousel displays in the Worklist entry screen. If the other samples on the sample carousel have no barcodes, the fields in the Worklist entry screen are cleared.

10. Select **Display/Edit**.

    The Worklist Display/Edit screen displays.

11. Select **UPDATE SCREEN** and verify that the patients added display in the worklist.

Selecting a Panel

To select a panel of tests to run for a particular sample, perform the following steps:

Note The panels are configured on the Panels screen. Refer to *Panel Configuration*, page 8-19.

1. On the Worklist entry screen, select **PANELS**.

   The Worklist Available Panels screen displays a list of available panels.

2. Select the appropriate panel name button.

   The tests included in this panel display in the Tests Ordered window in the panel color, and the panel name button highlights in the panel color.

3. Select other panel name buttons, as applicable.

   To deselect a panel, select the highlighted panel name button. The tests turn gray.

4. Select **OK**.

   The tests selected in the Worklist Available Panels screen display in the Tests Ordered field in the Worklist entry screen.

Assigning Tests to an Entire Rack

It may be more convenient to assign tests to an entire sample rack than to specify tests one at a time.

Note If the system is connected to an LIS, the tests to run for each sample are automatically entered in the worklist.

To assign tests to an entire rack, perform the following steps:

1. Load the samples on the sample rack, place the rack on the system, and select **RUN**.

   Note For samples with damaged or missing barcodes, follow the steps in *Damaged or Missing Patient Barcodes*, page 2-46. Do not assign tests while assigning patient samples to a tube position.

2. On the Worklist entry screen, select **Batch Tests by Rack**.

   The Batch Tests By Rack window displays.

3. Select one or more of the available sample racks.

   Note To deselect a sample rack, select the rack again.

4. To use a panel of tests, select **PANELS**. See *Selecting a Panel*, page 9-21.

5. To select individual tests, perform the following steps:
   a. Select **TESTS** to open the Available Tests screen and select the tests to run.

   Note Select Allergen **ACTIVE KITS** to view all Allergy kits entered in the database.

   b. Select Allergen **ON BOARD**.

      A button for every available allergy test displays in the center of the screen. Selections for universal allergy reagents display below the Test Categories field.

   c. Select the universal reagent to use for the allergy test added to the worklist.
   d. Select the button for the allergy test to add to the worklist.
   e. Continue selecting universal reagents and tests for each allergy test to add to the worklist.

   Note To remove an allergy test, select the universal reagent, then select the button for the allergy test to remove.

   f. If needed, specify replicates of the tests added to the worklist:
   g. Select a test in the Tests Selected field, then select **REPLICATES** to display the Replicates window.
   h. Enter the number of replicates to perform using the keyboard.
   i. Select **OK** to enter this number, then close the Replicates window.
   j. Repeat this process for all tests that require replicates.

   Note To clear the entries from the Tests Selected window, select **CLEAR**.

6. Select **ACCEPT**.

Results

Results are calculated using the point-to-point formula.

Results are calculated by drawing a straight line from the CPS to the corresponding dose. In the point-to-point method, several standards are run. Each standard has a specific concentration and a corresponding signal. The master curve is generated when each standard is connected point-to-point by a straight line.

Allergy level is reported in two ways:

- Concentration of IgE, IgG, or IgG4 kU/L

- Class (classes are based on concentration):

• Class 0: < 0.35	• Class 4: 17.5–52.4
• Class 1: 0.35–0.69	• Class 5: 52.5–99
• Class 2: 0.70–3.49	• Class 6: ≥ 100
• Class 3: 3.50–17.4	

- Extended Class (extended classes are based on concentration):

• Class 0: 0.0–0.10	• Class 3: 1.30–3.89
• Class 0/1: 0.11–0.24	• Class 4: 3.90–14.9
• Class 1: 0.25–0.39	• Class 5: 15.0–24.9
• Class 2: 0.40–1.29	• Class 6: ≥ 25.0

You can use the Review screen to examine results in detail. See *Reviewing Results*, page 2-67.

Appendix A: Safety Instructions

This information summarizes the established guidelines for handling laboratory biohazards. This summary is based on the guidelines developed by the Centers for Disease Control, the Clinical and Laboratory Standards Institute Document M29-A3, *Protection of Laboratory Workers from Occupationally Acquired Infections*, and the Occupational Safety and Health Administration's Bloodborne Pathogens Standard.[1 – 3]

Protecting Yourself from Biohazards

Use this summary for general information only. It is not intended to replace or supplement your laboratory or hospital biohazard control procedures.



BIOHAZARD

By definition, a biohazardous condition is a situation involving infectious agents biological in nature, such as the hepatitis B virus, the human immunodeficiency virus, and the tuberculosis bacterium. These infectious agents may be present in human blood and blood products and in other body fluids.

The following are the major sources of contamination when handling potentially infectious agents:

- needle sticks
- hand-to-mouth contact
- hand-to-eye contact
- direct contact with superficial cuts, open wounds, and other skin conditions that may permit absorption into subcutaneous skin layers
- splashes or aerosol contact with skin and eyes

To prevent accidental contamination in a clinical laboratory, strictly adhere to the following procedures:

- Wear gloves while servicing parts of the instrument that have contact with body fluids such as serum, plasma, urine, or whole blood.
- Wash your hands before going from a contaminated area to a uncontaminated area, or when you remove or change gloves.
- Perform procedures carefully to minimize aerosol formation.
- Wear facial protection when splatter or aerosol formation are possible.
- Wear personal protective equipment such as safety glasses, gloves, lab coats, or aprons when working with possible biohazard contaminants.

- Keep your hands away from your face.
- Cover all superficial cuts and wounds before starting any work.
- Dispose of contaminated materials according to your laboratory's biohazard control procedures.
- Keep your work area disinfected.
- Disinfect tools and other items that have been near any part of the instrument sample path or waste area with 10% v/v bleach.
- Do not eat, drink, smoke, or apply cosmetics or contact lenses while in the laboratory.
- Do not mouth pipet any liquid, including water.
- Do not place tools or any other items in your mouth.
- Do not use the biohazard sink for personal cleaning such as rinsing coffee cups or washing hands.

To prevent needle stick injuries, needles should not be recapped, purposely bent, cut, broken, removed from disposable syringes, or otherwise manipulated by hand.

References

1. Centers for Disease Control. 1988. Update: Universal precautions for prevention of transmission of human immunodeficiency virus, hepatitis B virus and other blood borne pathogens in healthcare settings. MMWR, 37:377 – 382, 387, 388.
2. Clinical and Laboratory Standards Institute (formerly NCCLS). *Protection of Laboratory Workers from Occupationally Acquired Infections; Approved Guideline - Third Edition*. CLSI Document M29-A3.[ISBN 1-56238-567-4]. Clinical and Laboratory Standards Institute, 940 West Valley Road, Suite 1400, Wayne, Pennsylvania 19087-1898 USA, 2005).
3. Federal Occupational Safety and Health Administration. Bloodborne Pathogens Standard. 29 CFR 1910. 1030.

Precautions Table

Operational precautions are included throughout this manual. The following table provides a comprehensive list of all the precautions to take for optimal instrument operation.

Category	Precaution
Specimen Tubes	Barcode labels on specimen tubes must face out when in a Sample Rack. Do not use specimen tubes that exceed 100 mm in height or are less than 12 mm in diameter.
Bead Packs	Do not use a Bead Pack if the barcode label was damaged or removed.
Substrate	Clean-up any substrate spills on the load scale. Do not use substrate on the system longer than 30 days.
Reagents	Use only IMMULITE 2000 system reagents with the IMMULITE 2000 systems. Do not reuse IMMULITE 2000 Reagent Wedges. Do not use a reagent wedge if the barcode label was damaged or removed.
Sample and Reagent Probes	Do not clean the reagent probe using any implements. Only clean the reagent probe using the procedure: *Cleaning the Sample and Reagent Probes*, page 5-5.
Kits	Read and carefully follow the instructions for use (IFU) supplied with each kit prior to use.
Water	Water used in the water bottle must be alkaline phosphatase-free. The chemiluminescent substrate used in the instrument is very sensitive to alkaline phosphatase.
Reaction Tubes	Use only the specially designed IMMULITE 2000 systems reaction tubes. The reaction tubes must be disposed of after single use.
Dilutions	Diluents should not be used beyond the indicated expiration date. To prevent damage to the dilution well, the polypropylene dilution well insert must be in place before performing dilutions.

Category	Precaution
Ventilation	Do not block the fan vents on the sides and back panel of the instrument.
Electrical	The instrument must be connected to a dedicated 220V power service.
Priming	You must remove the water and substrate probes from their stations before priming.
Microsampling	Do not use a microsample tube holder with a damaged or dirty barcode label. Ensure the microsample tubes are inserted so that they touch the bottom of the sample rack.
Tube Top Sample Cups	Do not use sample cups placed in the tops of primary collection tubes on the IMMULITE 2000 system. Load tube top sample cups only into a tube top sample rack. See *Tube Top Sample Cups (IMMULITE 2000 XPi System)*, page 2-8.
Solid and Liquid Waste	Solid and liquid waste may contain biohazardous material. Follow Universal Precautions when handling.

Appendix B: Service, Ordering, and Warranty

For technical assistance, contact your local technical support provider. For customer service or additional information, contact your local technical support distributor.

Legal Manufacturer
Siemens Healthcare Diagnostics Inc.
62 Flanders Bartley Road
Flanders, NJ 07836 USA

Siemens Healthineers Headquarters
Siemens Healthcare GmbH
Henkestraße 127
91052 Erlangen
Germany
Phone: +49 9131 84-0
siemens-healthineers.com

Limited Warranty

LIMITED WARRANTY. Siemens warrants that the software will substantially conform to specifications and to the documentation, provided that it is used on the computer hardware and with the operating system for which it is designed. Siemens also warrants the disks on which the software is recorded to be free from defects in material and workmanship under normal use for a period of ninety (90) days from the date of purchase.

Siemens warrants that the items delivered hereunder are of good material and workmanship, and are free from defects in design and manufacture. Siemens' responsibility is limited to repairing or replacing any item or part, for a period of one (1) year after delivery to the original purchaser. Defects caused by improper operating conditions, misuse, negligence, or alteration of the product void this warranty. Siemens shall not be liable for any direct, indirect, incidental, or consequential damages arising out of possession or use of the items. Consumables, as defined in the appropriate Siemens Price List for Instrument-Related Parts. Racks and Consumables, are not covered by this Warranty.

CUSTOMER REMEDIES. Siemens' entire liability and your exclusive remedy shall be replacement of the software that does not meet Siemens Limited Warranty and which is returned to Siemens. The Limited Warranty is void if failure of the software has resulted from accident, abuse, or misapplication.

NO OTHER WARRANTIES. Because software is inherently complex and may not be completely free of errors, you are advised to verify your work. The software and related documentation are provided "as is." Siemens disclaims all other warranties, either express or implied, including but not limited to implied warranties of merchantability and fitness for a particular purpose, with respect to the software and the accompanying written materials. Siemens shall not be liable for any direct, indirect, incidental, or consequential damages arising out of possession or use of this product.

Appendix C: Optional Direct Water Feed

The IMMULITE 2000 systems Direct Water Feed consists of a valve assembly, which connects the laboratory's purified water system to the IMMULITE system. The system's onboard water bottle is filled automatically as the water is utilized by the system.

The laboratory is responsible for providing the purified water to the valves at proper pressure (not to exceed 20 psi). To provide a way to interrupt the water supply during service, install a shut-off valve in the supply line near the system.

Water System

The IMMULITE 2000 systems Direct Water Feed is self-contained and requires minimal maintenance by the operator. The manufacturer recommends processing a minimum of 300 tests per day on a system using the Direct Feed Water System.

Operation of the Direct Feed Water System

The Direct Water Feed functions by detecting the level of water in the water bottle and refilling it by activating a set of valves. These valves control the flow of water from the laboratory's water system into the water bottle.

The system load cell measures the level of water in the water bottle. The load cell sits underneath the water bottle and measures its weight. As water is used by the system, the water bottle becomes lighter. This signals control valves in the Direct Water Feed manifold to open, filling the water bottle until the weight returns to the full/maximum value.

A float switch, located inside the water bottle, prevents overfilling. Unless the float switch is below the preset open position, it does not allow water to flow into the water bottle. This is important in situations where the water bottle is removed from the load cell for any length of time or the load cell is damaged or malfunctions.

For more information about maintaining the Direct Water Feed, refer to *Direct Water Feed System Routine Maintenance*, page 5-29.

Bypassing the IMMULITE 2000 Water System

The water system may be bypassed if it fails, or it becomes necessary to return the instrument to the standard water bottle. Contact Technical Support prior to bypassing the Water System.

To fill the water bottle, refer to *Checking and Filling the Water Bottle*, page 5-8.

Turn off the direct water feed power switch located behind the sample carousel. Look for the label marked water supply.

Troubleshooting and Frequently Asked Questions

The following are some common troubleshooting scenarios and frequently asked questions.

Situation	Possible Cause	Solution
Water Bottle does not fill	Water supply is turned off.	Turn water supply on.
	Connections to the water bottle are not attached, such as tubings and sensor wire.	Properly attach tubing or wire.
	The load cell is not working properly.	Check the consumables graph on the Home screen of the instrument. If it displays full and the bottle is empty, call Technical Support.
Water Bottle overfills	Water supply pressure is too high.	Adjust supply pressure to less than 20 PSI.
	Float valve not properly seated.	Check and re-seat the float valve.
	Water bottle not seated properly on the load cell.	Assure the bottle is fully seated on the load cell and the tubings and wires are not impinged.
Water TestPM or WATERTEST - 2000 Failed	Water source is contaminated.	Contact water supplier for correction.
	Less than 300 tests are run per day.	Empty water bottle and allow it to refill before use.

Situation	Possible Cause	Solution
	Instrument has been idle for longer than 48 hours.	Empty water bottle and allow it to refill before use.
	Water system valve is contaminated.	Contact Technical Support for service. Bypass the water system to continue running. Refer to *Bypassing the IMMULITE 2000 Water System*, page C-2.

Appendix D: Supplies

Consumables and Accessories

To place an order, contact Siemens or a distributor. IMMULITE 2000 Systems consumables and accessories are listed in the following table:

Note Those outside the United States should contact a National Distributor to place an order.

Part Number	Description	Quantity
L2ATC	Allergen Tube Caps*	1000
L2ATS2	Allergen Tube Septa*	250
L2AW1	Allergen Wedge Set	33
400920	Allergy Imaging Scanner Training Guide	1
901863	Barcode Label Printer Ribbon	1
901864	Barcode Label Stock	1
400790	Barcode Printer Kit	1
400925-01	Barcode Scanner (Standard)	1
400925-02	Barcode Scanner (Wedge Allergy Assay)	1
10-901807	Biohazard Bags*	20
422023	CO2 Scrubber Kit	1
400763	Decontamination Bottle	1
501705	Distilled Water Bottle (6L)	1
901689	Extension Cable for Monitor	1
901801	Fan Filter	1
902666	Image Drum (OKI 14E)	1 Not available for IMMULITE 2000 XPi.

* For single use only. Do not reuse.

Part Number	Description	Quantity
902934	Image Drum (OKI B4200)	1 Not available for IMMULITE 2000 XPi.
901824	Ink cartridge - black ink (710C printer)	1 Not available for IMMULITE 2000 XPi.
902058	Ink cartridge - black ink (810C printer)	1 Not available for IMMULITE 2000 XPi.
902058-02	Ink cartridge - black ink (970C printer)	1 Not available for IMMULITE 2000 XPi.
902057-02	Ink cartridge - color ink (970C printer)	1 Not available for IMMULITE 2000 XPi.
901825	Ink cartridge - color ink (710C printer)	1 Not available for IMMULITE 2000 XPi.
902057	Ink cartridge - color ink (810C printer)	1 Not available for IMMULITE 2000 XPi.
901205	In-Line Filters*	6
400753-54	Keyboard (English - U.K.)	1
400753-53	Keyboard (English - U.S.)	1
400753-58	Keyboard (French)	1
400753-55	Keyboard (German)	1
400753-57	Keyboard (Italian)	1
400753-56	Keyboard (Spanish)	1
400753-59	Keyboard (Swedish)	1
901728	Keyboard Cover	1

* For single use only. Do not reuse.

Part Number	Description	Quantity
400271	LIS ASTM Specifications	1
422013	LIS Comm Program	1
501706	Liquid Waste Bottle (6L)	1
LMH5	Microsample Inserts - set of 5	5
LMH15	Microsample Inserts - set of 15	15
LSMC	Microsample Tube Caps*	1000
LMST	Microsample Tubes*	1000
400755	Monitor Power Cable	1
901729	Paper (1 ream)	1
400767	Power Cord (US)	1
901836-01	Power Cord (Argentina, Austria, Brazil, Finland, France, Germany, Netherlands, Norway, Sweden)	1
901836-02	Power Cord (Hong Kong, Singapore, United Kingdom)	1
901836-03	Power Cord (Australian, New Zealand)	1
901836-04	Power Cord (Denmark)	1
901836-05	Power Cord (Switzerland)	1
901836-06	Power Cord (Chile, Italy)	1
901836-07	Power Cord (Israel)	1
901836-08	Power Cord (South Africa)	1
901835	Primary Tube Sample Guide	1
400537	Probe Assembly	2
L2KPM	Probe Cleaning Kit	1
L2PWSM	Probe Wash (2 Bottles)	1

* For single use only. Do not reuse.

Part Number	Description	Quantity
400706	Probe Wash Bottle (2L)	1
422223	Printer: Okidata 4250	1 Not available for IMMULITE 2000 XPi.
LRXT	Reaction Tubes	1000 (A-Z)
400726-01	Reagent Bottle Assembly (substrate)	1
650104	Sample Rack Letters	1
400756	Sample Racks	1
901519	Scanner Cable	1
400749	Side Tray	1
472021	Software Barcode Label Printer	1
400634	Solid Waste Container	2
10-901807	Solid Waste Container Biohazard Bags	20
400794	Substrate Bottle Assembly	2
400726-01	Substrate Reservoir (250 mL)	1
901865	Thermal Cleaning Kit	1
902665	Toner Cartridge (OKI 14E)	1 Not available for IMMULITE 2000 XPi.
902933	Toner Cartridge (OKI B4200)	1 Not available for IMMULITE 2000 XPi.
901427	Touchscreen Monitor	1
400754	Trackball	1
403034	Tube Top Sample Rack	2 Only available for IMMULITE 2000 XPi.

* For single use only. Do not reuse.

Part Number	Description	Quantity
901720	UPS 1400 VA Output (Approx. 20 minutes)	1
901721	UPS 1800 VA Output (Approx. 25 minutes)	1
901722	UPS 2200 VA Output (Approx. 30 minutes)	1
400918	Waste Chute Clean Out Tool	1
400909-01	Water Feed Control System	1
501705	Water Supply Bottle	1
905288 REF 10374178	Tube Top Sample Cups, 1 mL For use with 12 mm and 13 mm sample tubes.	1000 Only available for IMMULITE 2000 XPi.
905289 REF 10374179	Tube Top Sample Cups, 2 mL For use with 16 mm sample tubes.	1000 Only available for IMMULITE 2000 XPi.

* For single use only. Do not reuse.

Appendix E: System Specifications

Specifications Tables

Output Specifications

The following table lists the IMMULITE 2000/2000 XPi systems output specifications:

Output Specification	Quantity
Throughput	Up to 200 tests per hour
Time to first result	35 minutes
Tests per sample	Limited to sample size

Fluid Usage Specifications

The following table lists fluid specifications:

Fluid	Volume Used Per Test‡	Volume of Full Container	Approx. Number of Tests Per Container†
Water	7.5 mL	6000 mL	800
Probe Wash	2.0 mL	2000 mL	1000
Substrate	0.2 mL	205 mL	1025

†Number of Tests Per Full Container may vary depending upon amount of priming performed.

‡Volume Used Per Test is based upon a one-cycle, undiluted assay. Add 3 mL for a two-cycle (sequential) assay. If an assay is diluted onboard, add an additional 1 mL.

Dilution Specifications

The following table lists fluid volumes for onboard dilutions:

Dilution	Sample Volume (µL)	Water Volume (µL)	Diluent Volume (µL)
3X	67	80	53
5X	40	96	64
10X	20	108	72
20X	10	114	76
40X	5	117	78
100X	5	297	198

Computer Specifications

The following tables list the current specifications for the computer supplied with the IMMULITE 2000 systems.

These specifications are subject to change without notice.



WARNING

The computer supplied with the instrument was designed to run the included software. The installation of third-party software programs may adversely affect the proper operation of the instrument software or analyzer and may void the product warranty. Refer to *Limited Warranty* for more information.

For IMMULITE 2000 Systems:

Specification	Description
Processor	Integrate Core 2 Duo, 2.13 GHz
RAM	2 GB
Hard Drives (3)	• SATA hard drive user • DVD-RW drive backup
External Port	USB
Monitor	19-inch flat screen monitor with Surface Acoustic Wave touch-screen

Appendix F: Symbols and Labels

Symbols

IVD Symbols are International representations of information and/or instructions on the system's labeling. The following table displays the International symbols that are displayed on the system's labeling and their definitions.

Symbol	Description
	This symbol indicates to consult instructions for use before continuing.
	This symbol indicates the product is for single use only.
	This symbol indicates the product is fragile and should be handled with care.
	This symbol indicates to use caution and to refer to accompanying documents.
LOT	This symbol indicates the batch code.
REF	This symbol indicates the catalog number.
SN	This symbol indicates the serial number.
	This symbol indicates the expiration date.
STERILE	This symbol indicates the product is sterile.
STERILE A	This symbol indicates the product was sterilized using aseptic processing techniques.
STERILE R	This symbol indicates the product was sterilized using radiation.
STERILE EO	This symbol indicates the product was sterilized using ethylene oxide.
STERILE 	This symbol indicates the product was sterilized using steam or dry heat.

Symbol	Description
	This symbol indicates a biological risk.
	This symbol indicates to use caution because of biological risk.
	This symbol indicates the product is not sterile.
	This symbol indicates the product is not to be re-sterilize.
	This symbol indicates to keep the product away from heat.
	This symbol indicates to keep the product dry.
	This symbol indicates to protect the product from heat and radioactive source.
	This symbol indicates the lower limit of temperature.
	This symbol indicates the temperature limitation.
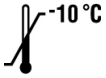	This symbol indicates the upper limit of temperature.
	This symbol indicates the product is a control.
	This symbol indicates the product is a negative control.
	This symbol indicates the product is a positive control.
	This symbol indicates the date of manufacture.
	This symbol indicates not to use the product if the package is damaged.
	This symbol indicates the product is an *in vitro* diagnostic medical device.

Symbol	Description
	This symbol indicates who the product was manufactured by.
	This symbol indicates the product contains sufficient for <X> tests.
	This symbol indicates the item is for Performance Evaluation only.
	This symbol indicates the representative in the European Community.
	This symbol indicates the product in the European Community.
	This symbol indicates caution is required because of potential exposure to a Laser.
	This symbol indicates the product was IEC 61010-01 safety tested by TUV for conformity to global markets including Canada, US, and EU.
	This product will not result in any environmental pollution under normal operating conditions for a period of 50 years. The product should be recycled immediately after 50 years or end of use. Refer to People's Republic of China Electronic Industry Standard – SJ/T11364–2006.
	This symbol indicates the product is not to be disposed of in the trash.

Labels

This section defines the labels on IMMULITE 2000/2000 XPi systems.

Figure F-1: Location of the Laser Warning Label on IMMULITE 2000 Systems

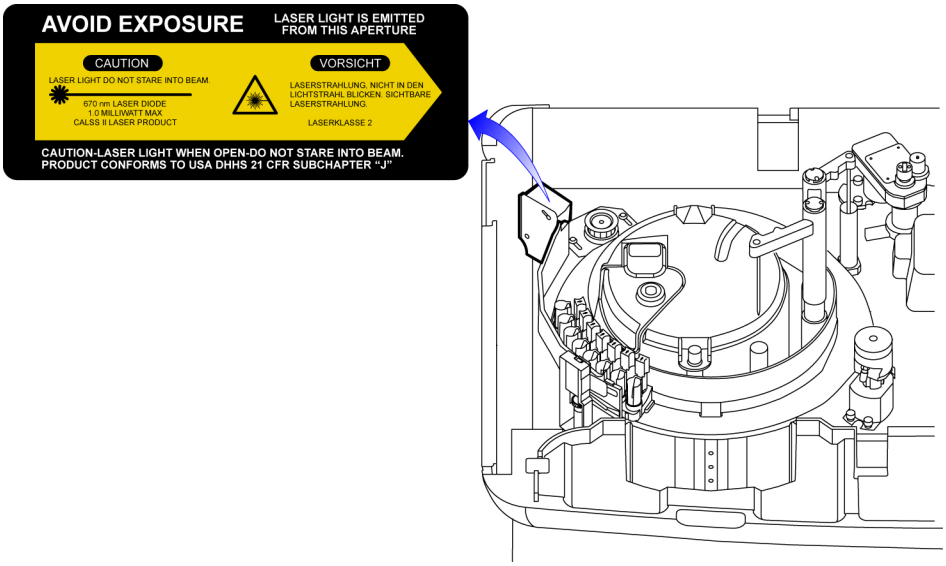

Figure F-2: Label on the Bottles and the Solid Waste Container on IMMULITE 2000 Systems

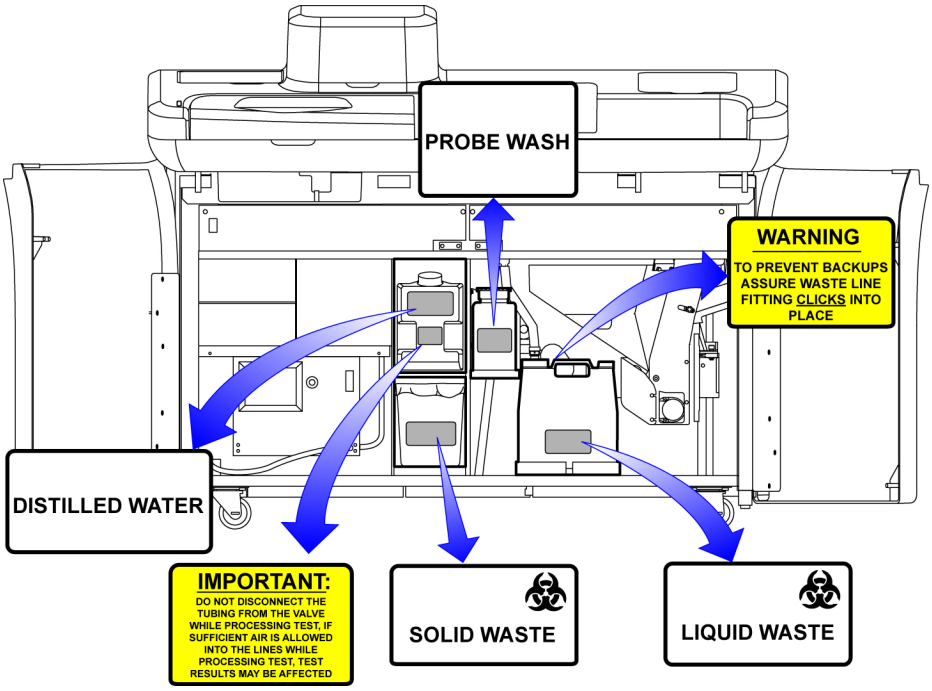

Appendix G: Installation and Relocation

Overview - Installation Preparation

The systems must be installed by an authorized Siemens Healthcare Diagnostics Service Representative. Before the Service Representative arrives, make a few simple preparations to expedite the installation process.

Upon receipt of the instrument and computer, inspect the shipping container. If you find any external damage to the container, notify your shipping department and call your Technical Support Provider.

Choosing a Location

Select a suitable location for the system in the laboratory, based on power, space, and temperature requirements described in this section.

Power Requirements

Use one of the following dedicated voltage power supply services:

- 200
- 208
- 220
- 230
- 240

CAUTION

Do not place the system near centrifuges, ultrasound or X-ray machinery, NMR scanners, or other sources of magnetic fields.

Space Requirements

Use the following space requirements when choosing a location for the system:

- The system must be on a level floor.
- For proper airflow, leave at least 10 cm (4 inches) of space around the sides and back of the instrument.
- The IMMULITE 2000 system dimensions are 151.64 cm (59.7 inches) wide, 75.44 cm (29.7 inches) deep, and 200.66 cm (79 inches) high.
- The IMMULITE 2000 XPi system dimensions are 160.02 cm (63 inches) wide, 91.44 cm (36 inches) deep, and 182.88 cm (72 inches) high.

Temperature Requirements

Use the following temperature requirements when choosing a location for the system:

- The temperature should be between 18° and 32° Celsius.
- The relative humidity should be less than 80% for a temperature up to 32° Celsius.
- The IMMULITE 2000 systems generate 3413 BTU/hr.

Water Requirements

The systems require distilled or de-ionized water of consistent quality. Water used should meet CLSI clinical laboratory reagent water (CLRW) standards at the time of preparation. Siemens has found that distilled water available in super markets can be acceptable, but there may be exceptions. Prior to using any water, you should test it for alkaline phosphatase contamination.

For detailed instructions, including how to evaluate the results, see *Water Test Procedure*, page 5-30.

The systems are sensitive to the presence of alkaline phosphatase resulting from microbial contamination of the water or the containers used.

Properly maintained commercial water treatment systems commonly used in laboratories generally produce reagent water that meets the requirements of CLRW standards at the time of preparation.

High quality reagent water can become contaminated during storage and transport. To ensure water quality on the system:

- Keep commercial water systems appropriately maintained.
- Do not use water from a commercial water system while maintenance is being performed. After maintenance, verify water system cleanliness and test the water for alkaline phosphatase contamination.
- Maintain cleanliness of storage containers, transfer containers, spigots, hoses or other plumbing used to transfer water from its source to the instrument.
- Limit the length of plumbing between the source and the system. Long plumbing lines increase the likelihood of introducing contamination.

  Note On rare occasions, non-alkaline phosphatase water contaminants may interfere with individual assays. The Water Testing Procedure used to detect alkaline phosphatase will not detect these contaminants. For assistance, call Technical Support.

Reference

Clinical and Laboratory Standards Institute (formerly NCCLS). *Preparation and Testing of Reagent Water in Clinical Laboratory; Approved Guideline - Fourth Edition.* CLSI Document C3-A4.[ISBN 1-56238-610-7]. Clinical and Laboratory Standards Institute, 940 West Valley Road, Suite 1400, Wayne, Pennsylvania 19087-1898 USA, 2005)

Appendix H: Error Messages

When the system encounters an error, it may report two messages; one from the Control Side computer and one from the User Side computer.

- Control Side Computer

  Controls the motion of all instrument motors. Messages from this computer include raw data about events, such as a bad bead pack. These messages indicate what is wrong, but are not specific.

- User Side Computer

  Displays instrument screens and performs result management functions. This computer receives messages from the control side computer and provides more specific information, such as, Rerunning test HCG marked as bad by bead pack error.

A better understanding of which event occurred and why is possible by reading both messages. This section discusses error message severities and priorities, explains some of the common errors and solutions, covers flags associated with results, and lists errors and solutions.

Error Message Severity and Priority

Error messages display on-screen within either white or red boxes, or the system writes them to the daily error log without displaying on the screen. For error messages that are displayed, the box color indicates the severity of the message – white boxes contain informative messages and system status, while red boxes contain important warnings and errors.

- **WARNING** indicates the system requires attention soon. It does not affect the patient results or the operation of the system.
- **ERROR** requires attention but does not stop the entire system from running. Usually, only one component is stopped.
- **SEVERE** may stop the system and requires immediate attention.

Within each severity level (white or red box) are priority levels. The higher the priority, the greater the importance of the error message. The color of the text used or the accompanying icon differentiates the priorities within a specific severity level. For example, a message about a low luminometer temperature displays in a white box with black print and has a low priority (1), but a message about a system status that needs attention displays in a white box with red print and has a higher priority (3).

The following table describes the types of messages that are displayed:

Priority	Severity	Description
0	Daily Error Log	Information messages that become apparent on result printouts and appropriate screens, such as no reagent on board.
1	White box black print	Informative messages indicating the system has taken an automatic action, such as reordering a test.
2	White box blue print	Messages indicating the system status that will result in a problem if left unattended, such as substrate low.
3	White box red print	Messages indicating the system status that needs attention and will imminently result in a problem, such as substrate is empty.
11	Red box warning icon	Circumstances not addressed by priorities 12 and 13 that require immediate attention.
12	Red box error icon	The system has entered Pause mode and is no longer processing new samples.
13	Red box severe icon	The system shut down; only the Luminometer is active.

Common Errors and Solutions

The following are some of the more common errors and how they may be resolved. For more detailed information on error messages, causes, and solutions, see *List of Error Messages*, page H-6.

- (237) Sample Pipettor Did Not Level Sense

  This usually indicates an insufficient (i.e., short) sample amount. Add additional sample and repeat.

- (287, 302, 392) Sample, Reagent, or Bead Carousel has jammed while homing

  Reseat the sample rack, reagent wedge, or bead pack as necessary.

- (380) Errors Have Shutdown the MCP Routine

  Check Event Log for associated mechanical jams. Correct and reinitialize.

- (524) Sample Door or Main Cover is Open

  Close the appropriate doors or covers; IMMULITE 2000 will continue to initialize.

- (534) Tip Jam Reagent Pipettor

  This message indicates that the pipetting probe has physically contacted something solid. Check to see that the reagent wedge is properly seated and the reagent wedge glide is properly attached and moves freely.

- (547) Reagent probe false level sensed at top or above wedge

  Remove the reagent wedge and open the glide (lid). Dry the top of the reagent wedge with a clean, lint free wiper and re-install the glide.

- (555) No reaction tube detected going into bead pause

  Refill the tube hopper if needed and check for jams in the orientation chute.

- (594) Marking Sample Tube as Bad

  This usually indicates an insufficient (short) sample amount. Add additional sample and repeat.

- (595) Marking reagent pack as bad

  Check the associated error message, such as Reagent False Level Sense, to correct the situation.

- (12400) Substrate Low

  Refill the substrate reservoir.

- (12401) Substrate Empty

  Refill the substrate reservoir.

- (12406) Probe Wash Low

  Refill the probe wash bottle.

- (12407) Probe Wash Empty

  Refill the probe wash bottle.

- (12408) Water Supply Low

  Refill the distilled/de-ionized water bottle.

- (12409) Water Supply Empty

  Refill the distilled/de-ionized water bottle.

- (12506) Substrate Temperature Low

  If this message continues for more than 10 minutes, it may indicate a failure with the substrate probe heater. In this situation, contact your local service provider or distributor.

Flags Associated with Results

The following flags may appear with results. For more detailed information on error messages, causes, and solutions. See *List of Error Messages*, page H-6.

Flag	Description
QC	One or more controls have failed for this assay.
H	Result is greater than the operator-specified normal range (above the first line of the test range). The system sends this to the LIS. It is not displayed anywhere else. Refer to *Defining Test Ranges*, page 8-14 for more information about defining test ranges.
L	Result is less than the operator-specified normal range (below the first line of the test range). The system sends this to the LIS. It is not displayed anywhere else. Refer to *Defining Test Ranges*, page 8-14 for more information about defining test ranges.
ADJ	• Adjustment for this assay failed due to slope limits • Adjustment for this assay is overdue for readjustment by more than 24 hours • The assay was never adjusted. • The kit was overwritten.
ERROR	Unable to calculate the result. The result should be verified.
EXP	The Kit expired.
TMP	The Substrate, Luminometer, and/or Incubator temperature was out of range when this result was calculated.

Flag	Description
Low	Result is less than the operator-specified review range. The system displays it on the review and LIS screens, and system displays the corresponding record in red on the patient short report and chartable report screens. Refer to *Defining Test Ranges*, page 8-14 for more information about defining test ranges.
High	Result is greater than the operator-specified review range. The system displays it on the review and LIS screens, and system displays the corresponding record in red on the patient short report and chartable report screens. Refer to *Defining Test Ranges*, page 8-14 for more information about defining test ranges.

List of Error Messages

The IMMULITE 2000/2000 XPi error messages are listed in numerical order:

0-100

Programming Errors

Occurs when underlying hardware errors cause software communication issues.

§ If the message persists, contact your Technical Support Provider.

101

Z8 and MCP not communicating

Communication Error between Control PC and Slave card.

§ Contact your Technical Support Provider.

102

Programmer error

Communication Error between Control PC and Slave card.

§ Contact your Technical Support Provider.

103

Cannot locate the POSITION.IML file

The missing file was either deleted or moved to another directory.

§ Contact your Technical Support Provider.

104

Cannot locate the current version of POSITION.IML file

The file is corrupt and contains invalid information.

§ Contact your Technical Support Provider.

105

POSITION.IML is corrupt

The file is corrupt and contains invalid information.

§ Contact your Technical Support Provider.

106

LmiMoveMotor has taken longer than 18 seconds.

A MoveMotor motion to a configured position has taken longer than 18 seconds.

§ Contact your Technical Support Provider.

108

LmiMoveSensor has taken longer than 18 seconds.

A MoveMotor motion to a sensor position has taken longer than 18 seconds.

§ Contact your Technical Support Provider.

111

LmiMoveHome has taken longer than 18 seconds.

A Motor move to a HOME sensor position has taken longer than 18 seconds.

§ Contact your Technical Support Provider.

114

LmiReadPMT has taken longer than 18 seconds.

The PMT read has taken longer than 18 seconds.

§ Contact your Technical Support Provider.

115

LmiMoveEnc cannot move more than 65535 motor steps.

The MoveEncoder has calculated that it must take more than 65,535 steps to reach a configured encoder position.

§ Contact your Technical Support Provider.

116

LmiDrawDiluter has taken longer than 18 seconds.

A DRD/Aspiration motion to a configured position has taken longer than 18 seconds.

§ Contact your Technical Support Provider.

118

LmiDispenseDilutor has taken longer than 18 seconds.

A DRD/Dispense motion to a configured position has taken longer than 18 seconds.

§ Contact your Technical Support Provider.

120

LmiDrawBiphasic has taken longer than 18 seconds.

A DRD Aspiration Probe Wash motion to a configured position has taken longer than 18 seconds.

§ Contact your Technical Support Provider.

122

LmiDispenseBiPhasic has taken longer than 18 seconds.

A DRD/Dispense (Probe Wash) motion to a configured position has taken longer than 18 seconds.

§ Contact your Technical Support Provider.

124

LmiMoveDilutorEnc cannot move than 65535 motor steps.

The DRD MoveEncoder has calculated that it must take more than 65,535 steps to reach a configured encoder position.

§ Contact your Technical Support Provider.

125

LmiMoveBiPhasic cannot move more than 65535 motor steps.

The DRD MoveEncoder has calculated that it must take more than 65,535 steps to reach a configured encoder position.

§ Contact your Technical Support Provider.

126

Tube spinner exceeded the 18 seconds

A Timed Tube Spinner motion has taken longer than 18 seconds.

§ Contact your Technical Support Provider.

127

LmiTimedDilutionWell has taken longer than 18 seconds.

A Timed Dilution Well motion has taken longer than 18 seconds.

§ Contact your Technical Support Provider.

128

Sample Pipettor jammed in the X direction

Sample Pipettor has jammed while moving in the horizontal direction.

§ Check that the sample tube or diluent tube is seated correctly.
§ Check the movement of Pipettor is not obstructed.
§ Check for unauthorized tube tops (sample cups sitting on top of tubes).
§ Check that the Sample Probe is not bent.
§ If the message persists, contact your Technical Support Provider.

129

Sample Pipettor exceeded 18 seconds in the X direction

Sample Pipettor horizontal movement to a configured position has taken longer than 18 seconds.

§ Contact your Technical Support Provider.

130

Sample Pipettor movement exceeded 65535 steps in the X direction

Sample Pipettor has calculated that it must take more than 65,535 steps to reach a configured encoder position.

§ Contact your Technical Support Provider.

132

Sample Pipettor jammed in the Z direction

Sample Pipettor has jammed while moving in the vertical direction.

§ Check that the sample tube or diluent tube is seated correctly.
§ Check the movement of Pipettor is not obstructed.
§ Check for caps on sample tubes.
§ Check for unauthorized tube tops (sample cups sitting on top of tubes).
§ Check that the Sample Probe is not bent.
§ If the message persists, contact your Technical Support Provider.

133

Sample Pipettor exceeded 18 seconds in the Z direction

Sample Pipettor vertical movement to a configured position has taken longer than 18 seconds.

§ Contact your Technical Support Provider.

134

Sample Pipettor movement exceeded 65535 steps in the Z direction

Sample Pipettor has calculated that it must take more than 65,535 steps to reach a configured encoder position.

§ Contact your Technical Support Provider.

136

Sample Pipettor jammed in the Z direction

Sample Pipettor has jammed while moving in the vertical or Z out direction.

§ Check that the sample tube or diluent tube is seated correctly.
§ Check the movement of Pipettor is not obstructed.
§ Check for caps on sample tubes.
§ Check for unauthorized tube tops (sample cups sitting on top of tubes).
§ Check that the Sample Probe is not bent.
§ If the message persists, contact your Technical Support Provider.

137

Sample Pipettor exceeded 18 seconds in the Z direction

A single Sample Pipettor's Z out movement to a configured position has taken longer than 18 seconds.

§ Contact your Technical Support Provider.

139

Sample valve jammed

The Sample Valve has jammed.

§ Contact your Technical Support Provider.

140

Sample valve exceeded 18 seconds

A single Sample Valve movement to a configured position has taken longer than 18 seconds.

§ Contact your Technical Support Provider.

141

Sample valve movement exceeded 65535 steps

Sample Valve has calculated that it must take more than 65,535 steps to reach a configured encoder position.

§ Contact your Technical Support Provider.

143

Reagent Pipettor jammed in the X direction

The Reagent Pipettor has jammed while moving in the horizontal direction.

§ Check that the Reagent Wedge is seated correctly.
§ Movement of Pipettor is obstructed.
§ If the message persists, contact your Technical Support Provider.

144

Reagent Pipettor exceeded 18 seconds in the X direction

A single Reagent Pipettor movement to a configured position in the X (horizontal) direction has taken longer than 18 seconds.

§ Contact your Technical Support Provider.

145

Reagent Pipettor movement exceeded 65535 steps in the X direction

Reagent Pipettor has calculated that it must take more than 65,535 steps to reach a configured encoder position in the X (horizontal) direction.

§ Contact your Technical Support Provider.

147

Reagent Pipettor jammed in the Z direction

Reagent Pipettor has jammed while moving in the vertical direction.

§ Check that the Glide is on correctly.
§ Check that the Wedge is seated correctly.
§ If the message persists, contact your Technical Support Provider.

148

Reagent Pipettor exceeded 18 seconds in the Z direction

A single Reagent Pipettor movement to a configured position in the Z (vertical) direction has taken longer than 18 seconds.

§ Contact your Technical Support Provider.

149

Reagent Pipettor movement exceeded 65535 steps in the Z direction

Reagent Pipettor has calculated that it must take more than 65,535 steps to reach a configured encoder position in the Z (vertical) direction.

§ Contact your Technical Support Provider.

151

Reagent Pipettor jammed in the Z direction

The Reagent Pipettor has jammed while moving in the vertical or Z-out direction.

§ Check that the Glide is on correctly.
§ Wedge is not seated correctly.
§ If the message persists, contact your Technical Support Provider.

152

Reagent Pipettor exceeded 18 second in the Z direction

A single Reagent valve movement to a configured position has taken longer than 18 seconds.

§ Contact your Technical Support Provider.

154

Reagent valve jammed

Reagent Valve has jammed.

§ Contact your Technical Support Provider.

155

Reagent valve exceeded 18 seconds

A single Reagent valve movement to a configured position has taken longer than 18 seconds.

§ Contact your Technical Support Provider.

156

Reagent valve movement exceeded 65535 steps

Reagent Valve has calculated that it must take more than 65,535 steps to reach a configured encoder position.

§ Contact your Technical Support Provider.

158

Tube indexer jammed

Tube Indexer has jammed.

§ Verify correct Reaction Tube is used.
§ Check for a malformed tube.
§ Check for obstructions.
§ If the message persists, contact your Technical Support Provider.

159

Tube indexer exceeded 18 seconds

A single Tube Indexer movement to a configured position has taken longer than 18 seconds.

§ Contact your Technical Support Provider.

160

Tube indexer movement exceeded 65535 steps

Tube Indexer has calculated that it must take more than 65,535 steps to reach a configured encoder position.

§ Contact your Technical Support Provider.

162

Tube transport jammed

Tube Transport Chain has jammed.

§ Verify correct tubes are used.
§ Check for malformed tube.
§ Visually inspect chain for any kind of interference.
§ If the message persists, contact your Technical Support Provider.

163

Tube transport exceeded 18 seconds timer

A single Tube Transport chain movement to a configured position has taken longer than 18 seconds.

§ Contact your Technical Support Provider.

164

Tube transport movement exceeded 65535 steps

Tube Transport Chain has calculated that it must take more than 65,535 steps to reach a configured encoder position.

§ Contact your Technical Support Provider.

166

Tube Transport cannot find home flag

Tube Transport chain cannot find home.

§ Contact your Technical Support Provider.

167

Processor shuttle has jammed

Processor Shuttle has jammed a second time while trying to move a fixed number of steps.

§ Remove mispositioned Reaction Tube.
§ If the message persists, contact your Technical Support Provider.

168

Processor shuttle movement has exceeded 18 second timer

A single Processor shuttle movement to a configured position has taken longer than 18 seconds.

§ Contact your Technical Support Provider.

169

Processor shuttle movement exceeded 65535 steps

The Processor Shuttle has calculated that it must take more than 65,535 steps to reach a configured encoder Position.

§ Contact your Technical Support Provider.

171

Incubator chain jammed

Incubator chain has jammed.

§ Check for obstruction at the pipetting area. Remove tube.
§ If the message persists, contact your Technical Support Provider.

172

Incubator chain exceeded 18 second timer

A single Incubator Chain movement to a configured position has taken longer than 18 seconds.

§ Contact your Technical Support Provider.

173

Home sensor missed Incubator chain flag

Incubator chain cannot find home.

§ Contact your Technical Support Provider.

175

Luminometer shuttle has jammed

Luminometer shuttle has jammed.

§ Check for overfilled or incorrectly seated solid waste container.
§ Check for correct Biohazard Bags.
§ Clear the Exit Chute using the Waste Chute Clean Out tool and check for Reaction Tubes obstructing the chute.
§ Check Reaction Tubes in the Tube Hopper for any abnormalities.
§ Check for clear plastic protruding from the upper trap opening and for plastic pieces in the Solid Waste Container.
§ If the message persists, contact your Technical Support Provider.

176

Luminometer shuttle exceeded 18 second timer

A single Luminometer Shuttle movement to a configured position has taken longer than 18 seconds.

§ Contact your Technical Support Provider.

178

Tube lifter has jammed

Tube Lifter has jammed.

§ Contact your Technical Support Provider.

179

Tube lifter exceeded 18 second timer

A single Tube Lifter movement to a configured position has taken longer than 18 seconds.

§ Contact your Technical Support Provider.

180

Tube lifter movement exceeded 65535 steps

The Tube Lifter has calculated that it must take more than 65,535 steps to reach a configured encoder Position.

§ Contact your Technical Support Provider.

182

Luminometer chain has jammed

Luminometer Chain has jammed.

§ Check for overfilled or incorrectly seated Solid Waste container.
§ Check for correct Biohazard Bags.
§ Clear the Exit Chute and check for Reaction Tubes obstructing the chute.
§ Check Reaction Tubes in the Tube Hopper for any abnormalities.
§ Contact your Technical Support Provider.

183

Luminometer chain exceeded 18 second timer

A single Luminometer Chain movement to a configured position has taken longer than 18 seconds.

§ Contact your Technical Support Provider.

185

PMT shutter has jammed

An error was detected in the vertical movement of the PMT shutter. The Instrument tries to correct itself and continue processing assays. If the error cannot be corrected, the Instrument stops processing tubes and another error message appears. The results for tubes following this second error message are lost.

§ Contact your Technical Support Provider.

186

PMT shutter exceeded 18 second timer

A single PMT Shutter movement to a configured position has taken longer than 18 seconds.

§ Contact your Technical Support Provider.

187

PMT shutter movement exceeded 65535 steps

The PMT shutter has calculated that it must take more than 65,535 steps to reach a configured encoder Position.

§ Contact your Technical Support Provider.

189

Attenuator disk has jammed

Attenuator Disk has jammed.

§ Contact your Technical Support Provider.

190

Attenuator disk exceeded 18 second timer

A single Attenuator Disk movement to a configured position has taken longer than 18 seconds.

§ Contact your Technical Support Provider.

191

Attenuator disk movement exceeded 65535 steps

The Attenuator Disk has calculated that it must take more than 65,535 steps to reach a configured encoder Position.

§ Contact your Technical Support Provider.

193

Dilution well exceeded 18 second timer

The dilution well has taken longer than 18 seconds to process a command.

§ Contact your Technical Support Provider.

194

Sample dilutor has jammed aspirating sample

Sample DRD has jammed while aspirating.

§ Check for physical obstruction preventing the DRD from moving.
§ Check for Sample Probe obstruction.
§ If the message persists, contact your Technical Support Provider.

195

Sample dilutor exceeded 18 second timer

A single one-speed Sample DRD draw motion, such as draw air slug, has taken longer than 18 seconds.

§ Contact your Technical Support Provider.

197

Sample dilutor has jammed aspirating probe wash

Sample DRD has jammed a second time while aspirating probe wash.

§ Check for physical obstruction preventing the DRD from moving.
§ Check for Sample Probe obstruction.
§ If the message persists, contact your Technical Support Provider

198

Sample dilutor exceeded 18 second timer

A single two-speed Sample DRD draw motion (for example, draw probe wash) has taken longer than 18 seconds.

§ Contact your Technical Support Provider.

200

Sample dilutor has jammed dispensing sample

Sample DRD has jammed a second time while dispensing.

§ Check for physical obstruction preventing the DRD from moving.
§ Check for Sample Probe obstruction.
§ If the message persists, contact your Technical Support Provider.

201

Sample dilutor exceeded 18 second timer

A single two-speed Sample DRD draw motion (e.g., draw probe wash) has taken longer than 18 seconds.

§ Contact your Technical Support Provider.

203

Sample dilutor has jammed during biphasic dispense

Sample DRD has jammed a second time while dispensing.

§ Check for physical obstruction preventing the DRD from moving.
§ Check for Sample Probe obstruction.
§ If the message persists, contact your Technical Support Provider.

204

Sample dilutor exceeded 18 second timer

A single two-speed Sample DRD dispense motion has taken longer than 18 seconds.

§ Contact your Technical Support Provider.

206

Sample dilutor has jammed dispensing into blind hole

Sample DRD has jammed.

§ Check for physical obstruction preventing the DRD from moving.
§ Check for physical obstruction of pipettor movements.
§ If the message persists, contact your Technical Support Provider.

207

Sample dilutor exceeded 18 second timer

A Sample DRD motion to a configured position has taken longer than 18 seconds.

§ Contact your Technical Support Provider.

208

Sample dilutor movement exceeded 65535 steps

The Sample DRD has calculated that it must take more than 65,535 steps to reach a configured encoder position.

§ Contact your Technical Support Provider.

210

Sample dilutor has jammed

Sample DRD has jammed a second time while moving to a configured position and performing a two-speed move.

§ Check for physical obstruction preventing the DRD from moving.
§ Check for physical obstruction of pipettor movements.
§ Contact your Technical Support Provider.

211

Sample dilutor exceeded 18 second timer

A Sample DRD motion to a configured position using a two-speed move has taken longer than 18 seconds.

§ Contact your Technical Support Provider.

212

Sample dilutor movement exceeded 65535 steps

The Sample DRD has calculated that it must take more than 65,535 steps to reach a configured encoder position using a two-speed move.

§ Contact your Technical Support Provider.

214

Reagent dilutor has jammed aspirating reagent

Reagent DRD has jammed a second time while performing a one-speed draw motion (air slug, sample, etc).

§ Check for physical obstruction preventing the DRD from moving.
§ If the message persists, contact your Technical Support Provider.

215

Reagent dilutor exceeded 18 second timer

A single one-speed Reagent DRD draw motion, such as draw air slug, has taken longer than 18 seconds.

§ Contact your Technical Support Provider.

217

Reagent dilutor has jammed aspirating probe wash

Reagent DRD has jammed a second time while performing a two-speed draw motion (probe wash aspiration).

§ Check for physical obstruction preventing the DRD from moving.
§ If the message persists, contact your Technical Support Provider.

218

Reagent dilutor exceeded 18 second timer

A single two-speed Reagent DRD draw motion (e.g., draw probe wash) has taken longer than 18 seconds.

§ Contact your Technical Support Provider.

220

Reagent dilutor has jammed dispensing reagent

Reagent DRD has jammed.

§ Check for physical obstruction preventing the DRD from moving.
§ If the message persists, contact your Technical Support Provider.

221

Reagent dilutor exceeded 18 second timer

A single one-speed Reagent DRD dispense motion has taken longer than 18 seconds.

§ Contact your Technical Support Provider.

223

Reagent dilutor has jammed during biphasic dispense

Reagent DRD has jammed.

§ Check for physical obstruction preventing the DRD from moving.
§ If the message persists, contact your Technical Support Provider.

224

Reagent dilutor exceeded 18 second timer

A single two-speed Reagent DRD dispense motion has taken longer than 18 seconds.

§ Contact your Technical Support Provider.

226

Reagent dilutor has jammed dispensing into blind hole

Reagent DRD has jammed.

§ Check for physical obstruction preventing the DRD from moving.
§ If the message persists, contact your Technical Support Provider.

227

Reagent dilutor exceeded 18 second timer

A Reagent DRD motion to a configured position has taken longer than 18 seconds.

§ Contact your Technical Support Provider.

228

Reagent dilutor movement exceeded 65535 steps

The Reagent DRD has calculated that it must take more than 65,535 steps to reach a configured encoder position.

§ Contact your Technical Support Provider.

230

Reagent dilutor has jammed

Reagent DRD has jammed a second time while moving to a configured position and performing a two-speed move.

§ Contact your Technical Support Provider.

231

Reagent dilutor exceeded 18 second timer

A Reagent DRD motion to a configured position using a two-speed move has taken longer than 18 seconds.

§ Contact your Technical Support Provider.

232

Reagent dilutor movement exceeded 65535 steps

The Reagent DRD has calculated that it must take more than 65,535 steps to reach a configured encoder position using a two-speed move.

§ Contact your Technical Support Provider.

234

Sample pipettor Z direction has jammed during level sense

Something interfered with the vertical movement of the pipettor arm. The Instrument tries to correct itself and continue processing assays. If the error cannot be corrected, the pipetting stops. If the Sample Pipettor caused the error, the tests on-board continue to process.

§ Check that the sample tube or diluent tube is seated correctly.
§ Check the movement of Pipettor is not obstructed.
§ Check for caps on sample tubes.
§ Check for unauthorized tube tops (sample cups sitting on top of tubes).
§ Check that the Sample Probe is not bent.
§ If the message persists, contact your Technical Support Provider.

236

Sample pipettor Z direction exceeded 18 second timer

A Sample Pipettor motion to a configured position using a two-speed move has taken longer than 18 seconds.

§ Contact your Technical Support Provider.

237

Sample pipettor did not level sense

Sample Pipettor has reached the tube bottom, diluent bottom or dilution well bottom position and has not level sensed.

§ Check for insufficient sample.
§ Check for bubble on sample.
§ Check for unauthorized tube tops (sample cups sitting on top of tubes).
§ Verify a tube is present in the position.
§ If the message persists, contact your Technical Support Provider.

238

Reagent pipettor Z direction has jammed during level sense

Something interfered with the vertical movement of the pipettor arm. The Instrument tries to correct itself and continue processing assays. If the error cannot be corrected, the pipetting stops. If the Reagent Pipettor caused the error, the tests on-board continue to process.

§ Check that the sample tube or diluent tube is seated correctly.
§ Check the movement of Pipettor is not obstructed.
§ Check that the Reagent Probe is not bent.
§ If the message persists, contact your Technical Support Provider.

240

Reagent pipettor Z direction exceeded 18 second timer

A Reagent Pipettor motion to a configured position using a two-speed move has taken longer than 18 seconds.

§ Contact your Technical Support Provider.

241

Reagent pipettor did not level sense

Reagent Pipettor has reached the reagent bottom position and has not level sensed.

§ Check to see if the Glide is on correctly.
§ Check to see if the Wedge is seated correctly.
§ If the message persists, contact your Technical Support Provider.

244

An event semaphore timed out. Please call Technical Service.

A series of events associated with the Push thread operation have not completed in the allotted time.

§ Contact your Technical Support Provider.

245

An event semaphore timed out. Please call Technical Service.

A series of events associated with the Sample Test thread operation have not completed in the allotted time.

§ Contact your Technical Support Provider.

246

An event semaphore timed out. Please call Technical Service.

A series of events associated with the Reagent thread operation have not completed in the allotted time.

§ Contact your Technical Support Provider.

247

An event semaphore timed out. Please call Technical Service.

A series of events associated with the Wash thread operation have not completed in the allotted time.

§ Contact your Technical Support Provider.

248

An event semaphore timed out. Please call Technical Service.

A series of events associated with the Substrate thread operation have not completed in the allotted time.

§ Contact your Technical Support Provider.

249

An event semaphore timed out. Please call Technical Service.

A series of events associated with the Read thread operation have not completed in the allotted time.

§ Contact your Technical Support Provider.

250

An event semaphore timed out. Please call Technical Service.

A series of events associated with the Sample thread operation have not completed in the allotted time.

§ Contact your Technical Support Provider.

251

An event semaphore timed out. Please call Technical Service.

A series of events associated with the Reagent Carousel thread operation have not completed in the allotted time.

§ Contact your Technical Support Provider.

252

An event semaphore timed out. Please call Technical Service.

A series of events associated with the Next Load thread operation have not completed in the allotted time.

§ Contact your Technical Support Provider.

253

An event semaphore timed out. Please call Technical Service.

A series of events associated with the Incubator thread operation have not completed in the allotted time.

§ Contact your Technical Support Provider.

254

An event semaphore timed out. Please call Technical Service.

A series of events associated with the Luminometer thread operation have not completed in the allotted time.

§ Contact your Technical Support Provider.

255

An event semaphore timed out. Please call Technical Service.

A series of events associated with the Sample thread operation have not completed in the allotted time.

§ Contact your Technical Support Provider.

256

An event semaphore timed out. Please call Technical Service.

A series of events associated with the Reagent thread operation have not completed in the allotted time.

§ Contact your Technical Support Provider.

257

There are too many immortal threads.

An immortal thread may be shut down improperly. Error recovery did not correctly shut down thread.

§ Possible instrument shutdown depending on the associated errors.
§ If the message persists, contact your Technical Support Provider.

258

Rack transfer error during homing. Remove rack if present and retry

Rack transfer error during homing.

§ Remove rack if present and retry.

260

Rack transfer jammed while moving to home position. Remove rack if present and retry

§ Rack transfer jammed while moving to home position.
§ Remove rack if present and retry.

261

Rack transfer timed out during homing. Contact Technical Service

§ Contact your Technical Support Provider.

262

Rack transfer has not found home. Contact Technical Service.

§ Contact your Technical Support Provider.

263

Rack transfer communication error during homing. Contact Technical Service.

§ Contact your Technical Support Provider.

265

Rack transfer has jammed. Remove rack if present and retry.

Rack transfer has jammed.

§ Remove rack if present and retry.

266

Rack transfer timed out. Contact Technical Service.

§ Contact your Technical Support Provider.

267

Rack transfer movement exceeded maximum steps. Contact Technical Service.

§ Contact your Technical Support Provider.

268

Rack transfer communication error. Contact Technical Service.

§ Contact your Technical Support Provider.

269

Rack gripper error during homing. Remove rack if present and retry.

Rack gripper error during homing.

§ Remove rack if present and retry.

271

Rack gripper has jammed while moving to home position. Remove rack if present and press Run button to attempt recovery.

Rack gripper has jammed while moving to home position.

§ To attempt recovery, remove rack if present and select **RUN**.

272

Rack gripper timed out during homing. Contact Technical Service.

§ Contact your Technical Support Provider.

273

Rack gripper has not found home. Contact Technical Service.

§ Contact your Technical Support Provider.

274

Rack gripper communication error during homing. Contact Technical Service.

§ Contact your Technical Support Provider

275

Sample pipettor X direction has jammed looking for home

Something interfered with the horizontal movement of the pipettor arm.

The Instrument tries to correct itself and continue processing assays. If the Instrument cannot correct the error, the pipetting stops. If the Sample Pipettor caused the error, the tests on-board continue to process.

§ Check that the sample tube or diluent tube is seated correctly.
§ Check the movement of Pipettor is not obstructed.
§ Check for caps on sample tubes.
§ Check for unauthorized tube tops (sample cups sitting on top of tubes).
§ Check that the Sample Probe is not bent.
§ If the message persists, contact your Technical Support Provider.

276

Sample pipettor X direction exceeded 18 second timer

A Sample Pipettor X-direction (horizontal) movement to Home has taken longer than 18 seconds.

§ Contact your Technical Support Provider.

277

Sample pipettor did not find HOME in the X direction

While attempting to return to the home position, the Sample Pipettor did not find the home sensor in the X direction (horizontal).

§ Contact your Technical Support Provider.

278

Sample pipettor Z direction has jammed looking for home.

The Sample Pipettor jammed a second time while attempting to do a homing routine in the Z direction (vertical). This may also occur if one of the sample devices has jammed and the Instrument is homing all the sample devices.

§ Check that the sample tube or diluent tube is seated correctly.
§ Check the movement of the pipettor is not obstructed.
§ Check for caps on the sample tubes.
§ Check that the Sample Probe is not bent.
§ If the message persists, contact your Technical Support Provider.

279

Sample pipettor Z direction exceeded 18 second timer

A Sample Pipettor Z-direction (vertical) motion to Home has taken longer than 18 seconds.

§ Contact your Technical Support Provider.

280

Sample pipettor did not find HOME in the Z direction

While attempting to return to the home position, the Sample Pipettor did not find the home sensor in the vertical direction.

§ Check that the sample tube or diluent tube is seated correctly.
§ Check the movement of Pipettor is not obstructed.
§ Check for caps on sample tubes.
§ Check for unauthorized tube tops (sample cups sitting on top of tubes).
§ Check that the Sample Probe is not bent.
§ If the message persists, contact your Technical Support Provider.

281

Sample valve has jammed while homing

The Sample Valve jammed.

§ Contact your Technical Support Provider.

282

Sample valve exceeded the 18 second timer

A Sample Valve motion to Home has taken longer than 18 seconds. This error should never occur in normal operation.

§ Contact your Technical Support Provider.

283

Sample valve did not find HOME

While attempting to return to the home position, the Sample Valve did not find the home sensor.

§ Contact your Technical Support Provider.

284

Sample dilutor has jammed while homing

The Sample Diluter jammed.

§ Check for physical obstruction preventing the DRD from moving.
§ Check for clotted probe.
§ If the message persists, contact your Technical Support Provider.

285

Sample dilutor exceeded the 18 second timer

A Sample Dilutor motion to Home has taken longer than 18 seconds.

§ Contact your Technical Support Provider.

286

Sample dilutor did not find HOME

While attempting to return to the home position, the Sample Dilutor did not find the home sensor.

§ Check for physical obstruction preventing the DRD from moving.
§ If the message persists, contact your Technical Support Provider.

287

Sample carousel has jammed while homing

The Sample Carousel jammed.

§ Check the placement of the Sample Racks, ensuring the racks are properly attached to the Instrument.
§ Ensure that the tubes are positioned correctly in the Sample Racks and that none of the tubes are too tall.
§ If the message persists, contact your Technical Support Provider.

288

Sample carousel exceeded the 18 second timer

A Sample Carousel motion to Home has taken longer than 18 seconds.

§ Contact your Technical Support Provider.

289

Sample carousel did not find HOME

While attempting to return to the home position, the Sample Carousel did not find the home sensor.

§ Check the placement of the Sample Racks, ensuring the racks are properly attached to the Instrument.
§ Ensure that the tubes are positioned correctly in the Sample Racks and that none of the tubes is too tall.
§ If the message persists, contact your Technical Support Provider.

290

Reagent pipettor X direction has jammed

Something interfered with the horizontal movement of the pipettor arm.

The Instrument tries to correct itself and continue processing assays. If the Instrument cannot correct the error, the pipetting stops.

§ Reagent Wedge may not be seated correctly.
§ Movement of Pipettor is obstructed.
§ If the message persists, contact your Technical Support Provider.

291

Reagent pipettor exceeded the 18 second timer in the X direction

A Reagent Pipettor X-direction motion to Home has taken longer than 18 seconds.

§ Contact your Technical Support Provider.

292

Reagent pipettor did not find HOME in the X direction

While attempting to return to the home position, the Reagent Pipettor did not find the home sensor.

§ Reagent Wedge may not be seated correctly.
§ Movement of Pipettor is obstructed.
§ If the message persists, contact your Technical Support Provider.

293

Reagent pipettor Z direction has jammed

Something interfered with the vertical movement of the pipettor arm. The Instrument tries to correct itself and continue processing assays. If the error cannot be corrected, the pipetting stops.

§ Check to see if the Glide is on correctly.
§ Check to see if the Wedge is seated correctly.
§ If the message persists, contact your Technical Support Provider.

294

Reagent pipettor exceeded the 18 second timer in the Z direction

A Reagent Pipettor motion to Home has taken longer than 18 seconds.

§ Contact your Technical Support Provider.

295

Reagent pipettor did not find HOME in the Z direction

While attempting to return to the home position, the Reagent Pipettor did not find the home sensor.

§ Check to see if any obstructions are around the reagent Pipettor.
§ If the message persists, contact your Technical Support Provider.

296

Reagent valve has jammed

The Reagent Valve jammed.

§ Contact your Technical Support Provider.

297

Reagent valve exceeded the 18 second timer

A Reagent Valve motion to Home has taken longer than 18 seconds.

§ Contact your Technical Support Provider.

298

Reagent valve did not find HOME

While attempting to return to the home position, the Reagent Valve did not find the home sensor.

§ Contact your Technical Support Provider.

299

Reagent dilutor has jammed

The Reagent Dilutor jammed.

§ Check for physical obstruction preventing the DRD from moving.
§ If the message persists, contact your Technical Support Provider.

300

Reagent dilutor exceeded the 18 second timer

A Reagent Dilutor motion to Home has taken longer than 18 seconds.

§ Contact your Technical Support Provider.

301

Reagent dilutor did not find HOME

While attempting to return to the home position, the Reagent Dilutor did not find the home sensor.

§ Check for physical obstruction preventing the DRD from moving.
§ If the message persists, contact your Technical Support Provider.

302

Reagent carousel has jammed

The Reagent Carousel jammed.

§ Reseat Wedge or carousel tray.
§ Check the Wedge Glide is properly installed.
§ If message persists, contact your Technical Support Provider.

303

Reagent carousel exceeded the 18 second timer

A Reagent Carousel motion to Home has taken longer than 18 seconds.

§ Contact your Technical Support Provider.

304

Reagent carousel did not find HOME

While attempting to return to the home position, the Reagent Carousel did not find the home sensor.

§ Reseat Wedge or carousel tray.
§ Check Wedge Glide for proper installation.
§ If the message persists, contact your Technical Support Provider.

305

Tube Indexer has jammed

At initialization and while returning to run from All Pause, Bead Pause, or Stop, the Tube Indexer jammed a second time while attempting to do a homing routine.

§ Check for obstructions.
§ Check that the proper Reaction Tube is used.
§ Check for a malformed Reaction Tube.
§ If the message persists, contact your Technical Support Provider.

306

Tube Indexer exceeded the 18 second timer

A Tube Indexer motion to Home has taken longer than 18 seconds.

§ Contact your Technical Support Provider.

307

Tube Indexer did not find HOME

While attempting to return to the home position, the tube Indexer did not find the home sensor.

§ Check for obstructions.
§ If the message persists, contact your Technical Support Provider.

308

Tube Transport has jammed

The Tube Transport Chain jammed.

§ Verify correct Reaction Tube is used.
§ Check for a malformed tube.
§ Visually inspect chain for any kind of interference.
§ If the message persists, contact your Technical Support Provider.

309

Tube Transport exceeded the 18 second timer

A Tube Transport chain motion to Home has taken longer than 18 seconds.

§ Contact your Technical Support Provider.

310

Tube Transport did not find HOME

While attempting to return to the home position, the tube transport chain did not find the home sensor.

§ Verify correct Reaction Tube is used.
§ Check for a malformed tube.
§ Visually inspect chain for any kind of interference.
§ If the message persists, contact your Technical Support Provider.

311

Processor Shuttle has jammed

The Processor Shuttle jammed.

§ Check for mispositioned Reaction Tube.
§ If the message persists, contact your Technical Support Provider.

312

Processor Shuttle exceeded the 18 second timer

A Processor shuttle motion to Home has taken longer than 18 seconds.

§ Contact your Technical Support Provider.

313

Processor Shuttle did not find HOME

While attempting to return to the home position, the processor shuttle did not find the home sensor.

§ Check for mispositioned Reaction Tube.
§ If the message persists, contact your Technical Support Provider.

314

PMT Shutter has jammed looking for home.

An error was detected in the vertical movement of the PMT shutter.

The Instrument tries to correct itself and continue processing assays. If the error can not be corrected, the Instrument stops processing tubes, and another error message appears. The results for tubes following this second error message are lost.

§ Contact your Technical Support Provider.

315

PMT Shutter exceeded the 18 second timer.

A PMT Shutter motion to Home has taken longer than 18 seconds.

§ Contact your Technical Support Provider.

316

PMT Shutter did not find HOME.

While attempting to return to the home position, the PMT shutter did not find the home sensor.

§ Contact your Technical Support Provider.

317

Luminometer Chain has jammed

The Luminometer chain jammed.

§ Check for overfilled or incorrectly seated solid waste container.
§ Check for correct Biohazard Bags.
§ Check the Exit Chute for Reaction Tubes and clear it.
§ Check Reaction Tubes in the Tube Hopper for any abnormalities.
§ Contact your Technical Support Provider.

318

Luminometer Chain exceeded the 18 second timer

A Luminometer Chain motion to Home has taken longer than 18 seconds.

§ Contact your Technical Support Provider.

319

Luminometer Chain did not find HOME

While attempting to return to the home position, the Luminometer Chain did not find the home sensor.

§ Check for overfilled or incorrectly seated solid waste container.
§ Check for correct Biohazard Bags.
§ Check the Exit Chute for Reaction Tubes and clear it.
§ Check Reaction Tubes in the Tube Hopper for any abnormalities.
§ If the message persists, contact your Technical Support Provider.

320

Luminometer Shuttle has jammed

The Luminometer Shuttle jammed.

§ Check for overfilled or incorrectly seated solid waste container.
§ Check for correct Biohazard Bags.
§ Correct and clear the Exit Chute.
§ Check Reaction Tubes in the Tube Hopper for any abnormalities.
§ Contact your Technical Support Provider.

321

Luminometer Shuttle exceeded the 18 second timer

A Luminometer Shuttle motion to Home has taken longer than 18 seconds.

§ Contact your Technical Support Provider.

322

Luminometer Shuttle did not find HOME

While attempting to return to the home position, the Luminometer Shuttle did not find the home sensor.

§ Check for overfilled or incorrectly seated solid waste container.
§ Check for correct Biohazard Bags.
§ Correct and clear the Exit Chute.
§ Check Reaction Tubes in the Tube Hopper for any abnormalities.
§ If the message persists, contact your Technical Support Provider.

323

Tube Lifter has jammed

At initialization and while returning to run from Stop, the Tube Lifter jammed a second time while attempting to do a homing routine.

§ Contact your Technical Support Provider.

324

Tube Lifter exceeded the 18 second timer

A Tube Lifter motion to Home has taken longer than 18 seconds.

§ Contact your Technical Support Provider.

325

Tube Lifter did not find HOME

While attempting to return to the home position, the Tube Lifter did not find the home sensor.

§ Contact your Technical Support Provider.

326

Incubator Chain has jammed

Incubator Chain has jammed.

§ Contact your Technical Support Provider.

327

Incubator Chain exceeded the 18 second timer

An Incubator Chain motion to Home has taken longer than 18 seconds.

§ Contact your Technical Support Provider.

328

Incubator Chain did not find HOME

While attempting to return to the home position, the Incubator Chain did not find the home sensor.

§ Contact your Technical Support Provider.

329

Attenuator Disk has jammed

The PMT Attenuator was unable to reach the correct position.

§ Contact your Technical Support Provider.

330

Attenuator Disk exceeded the 18 second timer

An Attenuator Disk motion to Home has taken longer than 18 seconds.

§ Contact your Technical Support Provider.

331

Attenuator Disk did not find HOME

While attempting to return to the home position, the Attenuator Disk did not find the home sensor.

§ Contact your Technical Support Provider.

332

Rack Loader sensor did not detect ejected rack. Remove rack if present and retry.

§ Remove rack if present and retry.

333

Unexpected error. Contact Technical Service.

§ Contact your Technical Support Provider.

334

Unexpected error. Contact Technical Service.

§ Contact your Technical Support Provider.

338

Error opening configuration file RLCfg.IMR. Contact Technical Service.

§ Contact your Technical Support Provider.

339

Error reading configuration file RLCfg.IMR. Contact Technical Service.

§ Contact your Technical Support Provider.

340

Unexpected error. Contact Technical Service.

§ Contact your Technical Support Provider.

341

An event semaphore timed out. Contact Technical Service.

Unexpected error. The reagent pipetter timed out waiting for the Sample Pipette event to complete.

§ Contact your Technical Support Provider.

342

An event semaphore timed out. Contact Technical Service.

Unexpected error. The reagent pipetter timed out waiting for an error handing event to complete to allow it to enter the incubator.

§ Contact your Technical Support Provider.

343

An event semaphore timed out. Contact Technical Service.

Unexpected error. The reagent pipetter timed out waiting for the Sample Pipette event to complete.

§ Contact your Technical Support Provider.

344

An event semaphore timed out. Contact Technical Service.

Unexpected error. The reagent pipetter timed out waiting for an error handing event to complete to allow it to enter the incubator.

§ Contact your Technical Support Provider.

345

An event semaphore timed out. Contact Technical Service.

Unexpected error. The sample pipetter timed out waiting for the Reagent Pipette event to complete.

§ Contact your Technical Support Provider.

346

An event semaphore timed out. Contact Technical Service.

Unexpected error. The sample pipetter timed out waiting for an error handing event to complete to allow it to enter the incubator.

§ Contact your Technical Support Provider.

347

An event semaphore timed out. Contact Technical Service.

Unexpected error. The sample pipetter timed out waiting for the reaction tube to be pushed into the incubator.

§ Contact your Technical Support Provider.

348

An event semaphore timed out. Contact Technical Service.

Unexpected error. The sample pipetter timed out waiting for the Reagent Pipette event to complete.

§ Contact your Technical Support Provider.

349

An event semaphore timed out. Contact Technical Service.

Unexpected error. The sample pipetter timed out waiting for an error handling event to complete to allow it to enter the incubator.

§ Contact your Technical Support Provider.

350

An event semaphore timed out. Contact Technical Service.

Unexpected error. The sample pipetter timed out waiting for the reaction tube to be pushed into the incubator.

§ Contact your Technical Support Provider.

351

An event semaphore timed out. Contact Technical Service.

Unexpected error. The sample pipetter timed out waiting for the Reagent Pipette event to complete.

§ Contact your Technical Support Provider.

352

An event semaphore timed out. Contact Technical Service.

Unexpected error. The sample pipetter timed out waiting for an error handling event to complete to allow it to enter the incubator.

§ Contact your Technical Support Provider.

353

An event semaphore timed out. Contact Technical Service.

Unexpected error. The sample pipetter timed out waiting for the reaction tube to be pushed into the incubator.

§ Contact your Technical Support Provider.

354

An event semaphore timed out. Contact Technical Service.

Unexpected error. The sample pipetter timed out waiting for the Reagent Pipette event to complete.

§ Contact your Technical Support Provider.

355

An event semaphore timed out. Contact Technical Service.

Unexpected error. The sample pipetter timed out waiting for an error handling event to complete to allow it to enter the incubator.

§ Contact your Technical Support Provider.

356

An event semaphore timed out. Contact Technical Service.

Unexpected error. The sample pipetter timed out waiting for the reaction tube to be pushed into the incubator.

§ Contact your Technical Support Provider.

357

An event semaphore timed out. Contact Technical Service.

Unexpected error. The sample error recovery timed out waiting for an event indicating that reagent error recovery is complete.

§ Contact your Technical Support Provider.

358

An event semaphore timed out. Contact Technical Service.

Unexpected error. The reagent error recovery timed out waiting for an event indicating that the bead pack lid is closed.

§ Contact your Technical Support Provider.

359

An event semaphore timed out. Contact Technical Service.

Unexpected error. The reagent error recovery timed out waiting for an event indicating that sample error recovery is complete.

§ Contact your Technical Support Provider.

360

An event semaphore timed out. Contact Technical Service.

Unexpected error. The reagent error recovery timed out waiting for an event indicating that the reaction tube was pushed into the incubator.

§ Contact your Technical Support Provider.

361

An event semaphore timed out. Contact Technical Service.

Unexpected error. The reagent error recovery timed out waiting for an event indicating that the reaction tube was pushed into the incubator.

§ Contact your Technical Support Provider.

363

Rack gripper has jammed. Press Run button to attempt recovery.

Rack gripper jammed when grabbing to eject or on the move to search for a possible rack on the platform. May have occurred while in Stop Mode or Run Mode. May also occur during transitioning Stop to Run, or transitioning Pause to Run. Possible hardware issue.

§ To attempt recovery, select **RUN**.
§ If the message persists, contact your Technical Support Provider.

364

Rack gripper timed out. Contact Technical Service.

Rack gripper timed out.

§ Contact your Technical Support Provider.

365

Rack gripper movement exceeded maximum steps. Contact Technical Service.

§ Contact your Technical Support Provider.

366

Rack gripper communication error. Contact Technical Service.

Rack gripper communication error.

§ Contact your Technical Support Provider.

367

Inner rack door error during homing. Remove rack if present and retry.

Inner rack door error during homing.

§ Remove rack if present and retry.
§ If the message persists, contact your Technical Support Provider.

369

Inner rack door has jammed while moving to home position. Remove rack if present and retry.

Inner rack door has jammed while moving to home position.

§ Remove rack if present and retry.
§ If the message persists, contact your Technical Support Provider.

370

Inner rack door timed out during homing. Contact Technical Service.

Inner rack door timed out during homing.

§ Contact your Technical Support Provider.

371

Inner rack door has not found home. Contact Technical Service.

Inner rack door has not found home.

§ Contact your Technical Support Provider.

372

Inner rack door communication error during homing. Contact Technical Service.

Inner rack door communication error during homing.

§ Contact your Technical Support Provider.

374

Inner rack door has jammed. Remove rack if present and retry.

Inner rack door has jammed.

§ Remove rack if present and retry.

375

barcode and Encoder position do not match

Instrument has failed to read a reagent barcode.

§ Contact your Technical Support Provider.

376

Partial reagent barcode read

Instrument has failed to read a reagent barcode.

§ Check the integrity of the Wedge label.
§ Clean label and re-interrogate.
§ If the message persists, contact your Technical Support Provider.

377-379

Programming Errors

Occurs when underlying hardware errors cause software communication issues.

§ Check error log for hardware errors and resolve them.
§ If the message persists, contact your Technical Support Provider.

380

Errors have shut down the MCP routine

Errors at start-up have shut down the control side software. More specific error messages will be generated.

§ Check Event Log for associated mechanical jams. Correct and reinitialize.
§ If unsuccessful, contact your Technical Support Provider.

381

Large Reagent Door is open during start-up. Close door to continue.

The Large Reagent Door is open.

§ Ensure that the Reagent door is fully closed before start up.
§ If message persists, contact your Technical Support Provider.

392

Bead Carousel has jammed.

Bead Carousel has jammed a second time while trying to move to a configured position.

§ Ensure that the Bead Packs are positioned correctly in the Bead Carousel.
§ If the message persists, contact your Technical Support Provider.

393

Bead Carousel has exceeded 18 second cycle shutting down instrument.

A Bead Carousel movement to home has taken longer than 18 seconds.

§ Contact your Technical Support Provider.

394

Bead Carousel has not detected home sensor

While attempting to return to the home position, the Bead Carousel did not find the home sensor.

§ Contact your Technical Support Provider.

395

Error reading configuration file BeadParm.iml. Stopping instrument. Please contact Technical Service.

Error reading configuration file BeadParm.iml.

§ Contact your Technical Support Provider.

398

Error reading BeadSens.iml. Stopping instrument. Contact Technical Service

Error reading BeadSens.iml.

§ Contact your Technical Support Provider.

399

Weak Bead Sensor. Please contact Technical Service.

Weak Bead Sensor.

§ Contact your Technical Support Provider.

400

Failed Bead Sensor. Entering Bead Pause Mode. Please contact Technical Service.

Failed Bead Sensor.

§ Contact your Technical Support Provider.

401

Allergen not found/rerun test

The required Allergen was not found on the Reagent Carousel, assay(s) cannot be processed.

§ Check inventory and verify that the allergen is in the allergen wedge.
§ If the problem persists, contact your Technical Support Provider.

402

No reaction tube detected at the tube indexer.

Sensor does not see a tube at the indexer.

§ Check for Reaction Tubes in the Tube Hopper.
§ Fill Hopper.
§ Verify correct Reaction Tube is used.
§ Check for a malformed tube.
§ Check for jam in the Orientation Chute.
§ If the message persists, contact your Technical Support Provider.

403

No bead dispensed rerunning test

No bead detected in tube after dispense.

§ Check if the bead pack is seated properly, and ensure beads are moving freely.
§ If message persists, contact your Technical Support Provider.

405

Luminometer Shuttle pushed again

Luminometer Shuttle attempted to push tube from the Wash Station into the luminometer a second time and failed. The sensor detected that the tube was still at the Wash Station after the push.

§ Contact your Technical Support Provider.

406

Tube Lifter not in the up position rerunning test

At the beginning of the wash cycle, the tube lifter detected that the tube was not in the Up position.

§ If the message persists, contact your Technical Support Provider.

407

Extra bead detected rerunning test

Instrument detects a bead prior to the bead dispense.

§ If the message persists, contact your Technical Support Provider.

408

Two beads detected rerunning test

Instrument detects two beads in the tube after the bead dispense.

§ If the message persists, contact your Technical Support Provider.

409

Clot detection has timed out.

Clot detection did not respond in the allowable time. Control Software is locked, and all tests on board will be lost.

§ Contact your Technical Support Provider.

410

Sample Pipettor has jammed in the X direction

Sample Pipettor has jammed a second time while trying to move a fixed number of steps in the X direction (horizontal).

§ Check that the sample tube or diluent tube is seated correctly.
§ Check that the movement of the Pipettor is not obstructed.
§ Check for caps on sample tubes.
§ Check for unauthorized tube tops (i.e., sample cups sitting on top of tubes).
§ Check that the Sample Probe is not bent.
§ If the message persists, contact your Technical Support Provider.

412

Sample Pipettor exceeded the 18 second timer in the X direction

Sample Pipettor has taken longer than 18 seconds moving to a configured position in the X direction (horizontal).

§ Contact your Technical Support Provider.

413

Sample Pipettor has jammed in the Z direction

Sample Pipettor has jammed a second time while trying to move a fixed number of steps in the Z direction (vertical).

§ Check that the sample tube or diluent tube is seated correctly.
§ Check that the movement of the Pipettor is not obstructed.
§ Check for caps on sample tubes.
§ Check for unauthorized tube tops (i.e., sample cups sitting on top of tubes).
§ Check that the Sample Probe is not bent.
§ If the message persists, contact your Technical Support Provider.

415

Sample Pipettor exceeded the 18 second timer in the Z direction

Sample Pipettor has taken longer than 18 seconds moving to a configured position in the Z direction (vertical).

§ Contact your Technical Support Provider.

416

Sample Valve has jammed

Sample Valve has jammed a second time while trying to move a fixed number of steps.

§ Contact your Technical Support Provider.

418

Sample Valve exceeded the 18 second timer

Sample Valve has taken longer than 18 seconds to move a fixed number of steps.

§ Contact your Technical Support Provider.

419

Sample Carousel has jammed

Sample Carousel has jammed a second time while trying to move a fixed number of steps.

§ Check the placement of the Sample Racks, ensuring the racks are properly attached to the Instrument.
§ Ensure that the tubes are positioned correctly in the Sample Racks and that none of the tubes are too tall.
§ If the message persists, contact your Technical Support Provider.

421

Sample Carousel exceeded the 18 second timer

Sample Carousel movement to a configured position has taken longer than 18 seconds.

§ Contact your Technical Support Provider.

422

Reagent Pipettor has jammed in the X direction

Reagent Pipettor has jammed a second time in the X direction (horizontal) while trying to move a fixed number of steps.

§ Check to see if the Reagent Wedge is seated correctly.
§ Check to see if the Movement of the Pipettor is obstructed.

424

Reagent Pipettor exceeded the 18 second timer in the X direction

Reagent Pipettor has taken longer than 18 seconds moving to a configured position in the X direction (horizontal).

§ Contact your Technical Support Provider.

425

Reagent Pipettor had jammed in the Z direction

Reagent Pipettor has jammed a second time while trying to move a fixed number of steps in the Z direction (vertical).

§ Check to see if the Glide is on correctly.
§ Check to see if the Wedge is positioned properly.

427

Reagent Pipettor exceeded the 18 second timer in the Z direction

Reagent Pipettor movement to a configured position has taken longer than 18 seconds.

§ Contact your Technical Support Provider.

428

Reagent Valve has jammed

Reagent Valve has jammed a second time while trying to move a fixed number of steps.

§ Contact your Technical Support Provider.

430

Reagent Valve exceeded the 18 second timer

Reagent Valve movement to a configured position has taken longer than 18 seconds.

§ Contact your Technical Support Provider.

431

Reagent Carousel has jammed

Reagent Carousel has jammed a second time while trying to move a fixed number of steps.

§ Check for mispositioned Wedge or carousel tray.
§ Check Wedge glide for proper installation.

433

Reagent Carousel exceeded the 18 second timer

Reagent Carousel motion to a configured position has taken longer than 18 seconds.

§ Contact your Technical Support Provider.

434

Bead Carousel has jammed

Bead Carousel has jammed a second time while trying to move to a configured position.

§ Ensure that the Bead Packs are positioned correctly in the Bead Carousel.
§ If the message persists, contact your Technical Support Provider.

436

Bead carousel exceeded the 18 second timer

Bead Carousel movement to a configured position has taken longer than 18 seconds.

§ Contact your Technical Support Provider.

437

Tube Transport has jammed

Tube Transport Chain has jammed a second time while trying to move a fixed number of steps.

§ Verify correct Reaction Tube is used.
§ Check for a malformed tube.
§ Visually inspect chain for any kind of interference.

439

Tube Transport exceeded the 18 second timer

Tube Transport Chain movement to a configured position has taken longer than 18 seconds.

§ Contact your Technical Support Provider.

440

Incubator Chain has jammed

Incubator Chain has jammed a second time while trying to move a fixed number of steps.

§ Check for obstruction at the Reagent Pipetting area. Remove tube.
§ Contact your Technical Support Provider.

442

Incubator Chain exceeded the 18 second timer

Incubator Chain movement to a configured position has taken longer than 18 seconds.

§ Contact your Technical Support Provider.

443

Luminometer Shuttle has jammed

Luminometer Shuttle has jammed a second time while trying to move a fixed number of steps.

§ Check for overfilled or incorrectly seated solid waste container.
§ Check for correct biohazard bags.
§ Correct and clear the Exit Chute.
§ Check the Reaction Tubes in the Tube Hopper for abnormalities, extra flashing, etc.
§ If the message persists, , contact your Technical Support Provider.

445

Luminometer Shuttle exceeded the 18 second timer

Luminometer Shuttle movement to a configured position has taken longer than 18 seconds.

§ Contact your Technical Support Provider.

446

Tube Lifter has jammed

Tube Lifter has jammed a second time while trying to move a fixed number of steps.

§ Contact your Technical Support Provider.

448

Tube Lifter exceeded the 18 second timer

Tube Lifter movement to a configured position has taken longer than 18 seconds.

§ Contact your Technical Support Provider.

449

Luminometer Chain has jammed

Luminometer Chain has jammed.

§ Check for overfilled or incorrectly seated solid waste container.
§ Check for correct biohazard bags.
§ Correct and clear the Exit Chute.
§ Check the Reaction Tubes in the Tube Hopper for abnormalities, extra flashing, etc.
§ Contact your Technical Support Provider.

451

Luminometer Chain exceeded the 18 second timer

Luminometer Chain movement to a configured position has taken longer than 18 seconds.

§ Contact your Technical Support Provider.

452

Luminometer Shutter has jammed

An error was detected in the vertical movement of the PMT shutter.

The Instrument tries to correct itself and continue processing assays. If the error can not be corrected, the Instrument stops processing tubes, and another error message appears. The results for tubes following this second error message are lost.

§ Contact your Technical Support Provider.

454

Luminometer Shutter exceeded the 18 second timer

Luminometer Shutter movement to a configured position has taken longer than 18 seconds.

§ Contact your Technical Support Provider.

455

Attenuator Disk has jammed

Attenuator Disk has jammed a second time while trying to move a fixed number of steps.

§ Contact your Technical Support Provider.

457

Attenuator Disk exceeded the 18 second timer

Attenuator Disk movement to a configured position has taken longer than 18 seconds.

§ Contact your Technical Support Provider.

458

Processor Shuttle has jammed

Processor Shuttle has jammed a second time while trying to move a fixed number of steps.

§ Remove mispositioned Reaction Tube.
§ If the message persists, contact your Technical Support Provider.

460

Processor Shuttle exceeded the 18 second timer

Processor Shuttle movement to a configured position has taken longer than 18 seconds.

§ Contact your Technical Support Provider.

461

Sample Carousel has jammed

The Sample Carousel jammed.

§ Check the placement of the Sample Racks, ensuring the racks are properly attached to the Instrument.
§ Ensure that the tubes are positioned correctly in the Sample Racks and that none of the tubes is too tall.
§ If the message persists, contact your Technical Support Provider.

462

Sample Carousel exceeded the 18 second timer

A single Sample Carousel movement to a configured position has taken longer than 18 seconds.

§ Contact your Technical Support Provider.

463

Sample Carousel has exceeded the 65535 steps

The Sample Carousel has calculated that it must take more than 65,535 steps to reach a configured encoder position.

§ Contact your Technical Support Provider.

465

Reagent Carousel has jammed

Reagent Carousel has jammed a second time while trying to move to a configured position.

§ Reseat Wedge or carousel.
§ Check Wedge Glide for proper installation.
§ If the message persists, contact your Technical Support Provider.

466

Reagent Carousel exceeded the 18 second timer

A single Reagent Carousel movement to a configured position has taken longer than 18 seconds. This error should never occur in normal operation.

§ Contact your Technical Support Provider.

467

Reagent Carousel has exceeded the 65535 steps

The Reagent Carousel has calculated that it must take more than 65,535 steps to reach a configured encoder position.

§ Contact your Technical Support Provider.

469

Bead Carousel has jammed

Bead Carousel has jammed.

§ Ensure that the Bead Packs are positioned correctly in the Bead Carousel.
§ If the message persists, contact your Technical Support Provider.

470

Bead Carousel exceeded the 18 second timer

A single Bead Carousel movement to a configured position has taken longer than 18 seconds.

§ Contact your Technical Support Provider.

471

Bead Carousel has exceeded the 65535 steps

The Bead Carousel has calculated that it must take more than 65,535 steps to reach a configured encoder position.

§ Contact your Technical Support Provider.

473

Reaction Tube is not in the pipetting position

Instrument does not detect a tube at the pipetting position.

§ Check for mispositioned Reaction Tube.
§ If the message persists, contact your Technical Support Provider.

494

Luminometer Chain has exceeded 65535 steps.

The Luminometer Chain has calculated that it must take more than 65,535 steps to reach Home.

§ Contact your Technical Support Provider.

495

Luminometer Shuttle has exceeded 65535 steps

The Luminometer Shuttle has calculated that it must take more than 65,535 steps to reach Home.

§ Contact your Technical Support Provider.

496

Sample Pipettor has jammed in the Z direction

Sample Pipettor Z Motor has jammed.

§ Check that the sample tube or diluent tube is seated correctly.
§ Check the movement of Pipettor is not obstructed.
§ Check for caps on sample tubes.
§ Check for unauthorized tube tops (sample cups sitting on top of tubes).
§ Check that the Sample Probe is not bent.
§ If the message persists, contact your Technical Support Provider.

498

Sample Pipettor exceeded the 18 second timer in the Z direction

Sample Pipettor Z Motor motion to a configured position has taken longer than 18 seconds.

§ Contact your Technical Support Provider.

499

Sample Pipettor has exceeded 65535 steps

Sample Pipettor Z Motor has calculated that it must take more than 65,535 steps to reach a configured encoder position.

§ Contact your Technical Support Provider.

500

Reagent Pipettor has jammed in the Z direction

Reagent Pipettor Z Motor has jammed a second time while trying to move to a configured position.

§ Check to see if the Glide is on correctly.
§ Check to see if the Wedge is seated correctly.

502

Reagent Pipettor exceeded the 18 second timer

Reagent Pipettor Z Motor motion to a configured position has taken longer than 18 seconds.

§ Contact your Technical Support Provider.

503

Reagent Pipettor has exceeded 65535 steps

Reagent Pipettor Z Motor has calculated that it must take more than 65,535 steps to reach a configured encoder position.

§ Contact your Technical Support Provider.

504

Rerun test designated bad by Initializing Run Mode

A sequential assay was unable to receive second reagent because the Instrument was initializing the Run Mode from the Pause Mode.

§ If the message persists, contact your Technical Support Provider.

505

Rerun test designated bad by Pause Mode

A sequential assay was unable to receive second reagent because the Instrument was in Pause Mode.

§ If the message persists, contact your Technical Support Provider.

506

Rerun test designated bad by In-Cycle Prime Mode

A sequential assay was unable to receive second reagent because the Instrument was performing an In-cycle prime.

§ Contact your Technical Support Provider.

507

Rerun test designated bad by Sample Tube

A problem was detected with a sample tube during sample pipetting.

§ Check sample.

508

Rerun test designated bad by Reagent Pack

A problem was detected with a reagent pack during reagent pipetting.

§ Check reagent pack.
§ If the message persists, contact your Technical Support Provider.

509

Rerun test designated bad by Bead Pack

A problem was detected with a Bead Pack while attempting to dispense a bead.

§ Check Bead Pack for static. Tap gently and return it to the Bead Carousel.
§ Check for empty pack.
§ Manually dispense bead.
§ Rerun.

510

Rerun test designated bad by Running Error

Jam in a reagent or sampling device preventing the pipetting of reagent for a sequential assay or further processing of B12 and Folate.

§ Check Error Log for associated errors.
§ Correct the errors if possible.
§ If the message persists, contact your Technical Support Provider.

511

Rerun test designated bad by Sample 1 Not Found

The required Sample 1 was not found on the Sample Carousel. Assay(s) can not be processed.

§ Contact your Technical Support Provider.

512

Rerun test designated bad by Sample 2 Not Found

The required Sample 2 was not found on the Sample Carousel. Assay(s) can not be processed.

§ Contact your Technical Support Provider.

513

Rerun test designated bad by No Diluent

The appropriate, required onboard diluent was not found when an onboard dilution had been requested.

§ Put diluent on board.
§ If the message persists, contact your Technical Support Provider.

514

Rerun test designated bad by Reagent 1 Not Found

The required Reagent 1 was not found on the Reagent Carousel. Assay(s) can not be processed.

§ Contact your Technical Support Provider.

515

Rerun test designated bad by Reagent 2 Not Found

The required Reagent 2 was not found on the Reagent Carousel. Assay(s) can not be processed.

§ Contact your Technical Support Provider.

516

Rerun test designated bad by No Bead

The required Bead Pack was not found on the Bead Carousel. Assay(s) can not be processed.

§ Check Bead Pack for obstructions to dispense.
§ Manually dispense bead.
§ Reseat Bead Pack and try again.
§ Rerun.

517

Rerun test designated bad by Motor Jam

A Motor Jam error has occurred preventing the sampling and/or continued processing of an assay(s).

§ Contact your Technical Support Provider.

518

Rerun test designated bad

An unknown error has prevented a sample or reagent from being pipetted. This should not occur in normal operation.

§ Contact your Technical Support Provider.

519

$IM2K$ doors must be closed for operation

A door, or doors, are not properly closed, or a failure of door sensor(s) has occurred.

§ Close the door.
§ If the message persists, contact your Technical Support Provider.

520

Processor Shuttle has jammed retracting during homing.

The Processor Shuttle has jammed a second time while moving to the BACK position during homing.

§ Remove mispositioned Reaction Tube.
§ If the message persists, contact your Technical Support Provider.

521

Processor Shuttle exceeded the 18 second timer

Processor shuttle motion has taken longer than 18 seconds.

§ Contact your Technical Support Provider.

522

Processor Shuttle has exceeded 65535 steps

The Processor Shuttle has calculated that it must take more than 65,535 steps to reach a configured encoder position.

§ Contact your Technical Support Provider.

524

Sample Door or Main Cover is open

The Sample Door or the Instrument cover was not closed before RUN was selected.

§ Close the door or cover.

525

Reagent Door is open

Reagent Access Door or Reagent Cover is open.

§ Close the door.

526

Bead Door is open

Bead Chamber Door is open.

§ Close the door.

530

Tip Jam

The probe has not found liquid.

§ Check that the sample tube or diluent tube is seated correctly.
§ Check the movement of Pipettor is not obstructed.
§ Check for caps on sample tubes.
§ Check for unauthorized tube tops (sample cups sitting on top of tubes).
§ Check that the Sample Probe is not bent.
§ If the message persists, contact your Technical Support Provider.

531

Tip Jam Sample Pipettor

Sample Pipettor has not found liquid.

§ Check that the sample tube or diluent tube is seated correctly.
§ Check the movement of Pipettor is not obstructed.
§ Check for caps on sample tubes.
§ Check for unauthorized tube tops (sample cups sitting on top of tubes).
§ Check that the Sample Probe is not bent.
§ If the message persists, contact your Technical Support Provider.

532

Tip Jam Sample Pipettor

Sample Pipettor has not found liquid.

§ Check that the sample tube or diluent tube is seated correctly.
§ Check the movement of Pipettor is not obstructed.
§ Check for caps on sample tubes.
§ Check for unauthorized tube tops (sample cups sitting on top of tubes).
§ Check that the Sample Probe is not bent.
§ If the message persists, contact your Technical Support Provider.

533

Tip Jam Sample Pipettor

Sample Pipettor has not found liquid.

§ Check that the sample tube or diluent tube is seated correctly.
§ Check the movement of Pipettor is not obstructed.
§ Check for caps on sample tubes.
§ Check for unauthorized tube tops (sample cups sitting on top of tubes).
§ Check that the Sample Probe is not bent.
§ If the message persists, contact your Technical Support Provider.

534

Tip Jam Reagent Pipettor

Reagent Pipettor has not found liquid.

§ Ensure that the Glide is seated correctly on the Reagent Wedge.
§ Ensure that Reagent Wedge is seated correctly.
§ Ensure the pack lid opener is retracted.
§ If the message persists, contact your Technical Support Provider.

535

Tip Jam Reagent Pipettor

A Reagent Z pipettor motion for a fixed number of steps has encountered a Tip Jam.

§ Ensure that the Glide is seated correctly on the Reagent Wedge.
§ Ensure that Reagent Wedge is seated correctly.
§ Ensure the pack lid opener is retracted.
§ If the message persists, contact your Technical Support Provider.

536

Tip Jam Reagent Pipettor

A Reagent Z pipettor motion to a configured position has encountered a Tip Jam.

§ Ensure that the Glide is seated correctly on the Reagent Wedge.
§ Ensure that Reagent Wedge is seated correctly.
§ Ensure the pack lid opener is retracted.
§ If the message persists, contact your Technical Support Provider.

537

Tip Jam Reagent Pipettor

A Reagent Z level sense motion has encountered a tip jam. This can only occur when going into the Reagent Wedge.

§ Ensure that the Glide is seated correctly on the Reagent Wedge.
§ Ensure that Reagent Wedge is seated correctly.
§ Ensure the pack lid opener is retracted.
§ If the message persists, contact your Technical Support Provider.

538

Bead Dispenser jammed - motor does not move

The Bead Dispenser has been unsuccessful in dispensing a bead.

§ Be sure Bead Pack is seated correctly.
§ Remove the Bead Pack, invert it, and then re-install it.
§ Manually dispense a bead.
§ If the message persists, contact your Technical Support Provider.

539

Bead Dispenser jammed - cannot find bead dispense sensor

The Bead Dispenser has been unsuccessful in dispensing a bead.

§ Be sure Bead Pack is seated correctly.
§ Remove the Bead Pack, invert it, and then re-install it.
§ Manually dispense a bead.
§ If the message persists, contact your Technical Support Provider.

540

Bead Dispenser jammed - in dispense position

The Bead Dispenser has been unsuccessful in dispensing a bead.

§ Be sure Bead Pack is seated correctly.
§ Remove the Bead Pack, invert it, and then re-install it.
§ Manually dispense a bead.
§ If the message persists, contact your Technical Support Provider.

541

Bead Dispenser jammed - cannot find home

The Bead Dispenser has been unsuccessful in dispensing a bead.

§ Be sure Bead Pack is seated correctly.
§ Remove the Bead Pack, invert it, and then re-install it.
§ Manually dispense a bead.
§ If the message persists, contact your Technical Support Provider.

542

Reagent Lid Opener jammed - pack lid opener not extending

The Reagent Lid Opener has tried to open a Wedge unsuccessfully.

§ Contact your Technical Support Provider.

543

Reagent Lid Opener jammed - cannot find reagent open

The Reagent Lid Opener has tried to open a Wedge unsuccessfully.

§ Contact your Technical Support Provider.

544

Reagent Lid Opener jammed - cannot find home

The Reagent Lid Opener has tried to retract unsuccessfully.

§ Contact your Technical Support Provider.

546

Sample False Level Sensed

A sample z-pipettor level sense motion has level sensed higher than expected.

§ Check the position of the tube in the Sample Rack.
§ Ensure sufficient sample is available in the tube.
§ Check for and eliminate any bubbles in the tube.
§ Check for splashing near the pipettor.
§ Check that approved tube size was used.
§ Confirm that an unapproved tube insert was not used.
§ If the message persists, contact your Technical Support Provider.

547

Reagent Probe False Level Sensed at top or above wedge

A Reagent z-Pipettor level sense motion has level sensed higher than expected

§ Check the position of the Reagent Wedge in the Reagent Carousel.
§ Make sure the Reagent Wedge lid is positioned correctly and that it moves freely.
§ Ensure no bubbles are in the reagent.
§ Check for a reagent fluid film under the Wedge Glide.
§ Check for splashing on or near the probe.
§ If the message persists, contact your Technical Support Provider.

548

Bad Bead Pack

A Bead Pack has failed to dispense three beads in a row.

§ Remove Bead Pack from carousel and invert.
§ Reseat the Bead Pack.

549

Wash Station spinner exceeded the 18 second timer

The Wash Station motor has taken longer than 18 seconds to complete a spin.

§ Contact your Technical Support Provider.

550

Bad spin at Wash Station

The Wash Station motor has spun at an incorrect speed.

§ Contact your Technical Support Provider.

551

Dilution Well exceeded the 18 second timer

The Dilution Well motor has taken longer than 18 seconds to complete a spin.

§ Contact your Technical Support Provider.

552

Bad spin at Dilution Well

The Dilution Well motor has spun at an incorrect speed.

§ Contact your Technical Support Provider.

553

Incubator Shaker has stopped

The Incubator Shaker motor is not moving.

§ Contact your Technical Support Provider.

554

Tube Escalator has jammed or Hopper left open

The sensor indicates that the Tube Escalator belt is not moving. This may be caused by a jam, or by the Hopper being left open.

§ Close the Hopper.
§ Clear out Orientation chute.
§ Check for obstruction in the Hopper or Escalator.
§ Check for obstruction preventing closure of Hopper.
§ If the message persists, contact your Technical Support Provider.

555

No reaction tube detected going into bead pause

No Reaction tube detected in at the Tube Indexer.

§ Check for Reaction Tubes in the Tube Hopper.
§ Fill Hopper.
§ Check for jam in the Orientation Chute.
§ Verify correct Reaction Tube is used.
§ Check for a malformed tube.
§ If the message persists, contact your Technical Support Provider.

556

Substrate Probe missing - Is probe fully seated?

Error is generated during Start-Up or Initialization if the Substrate Probe is not detected.

§ Ensure the Substrate probe is seated correctly.
§ If the message persists, contact your Technical Support Provider.

557

Water Probe missing - Is probe fully seated?

Error is generated during Start-Up or Initialization if the Water Probe is not detected.

§ Ensure the Water Probe is seated correctly.
§ If the message persists, contact your Technical Support Provider.

558

One or more samples on the rack that was ejected were in queue to pipette.

Tests are re-ordered

§ Re-load the rack with the samples that generated the error into the rack loader.

559

Marked bad and rerunning test – water dispense error

A tube needs to be spun during the current cycle and the water probe was not detected.

§ If the message persists, contact your Technical Support Provider.

560

Marked bad and rerunning test – substrate dispense error

A tube needs to receive substrate during the current cycle and the substrate probe was not detected.

§ If the message persists, contact your Technical Support Provider.

561

Marked bad and rerunning test – trigger reagent dispense error

A tube needs to receive the trigger reagents during the current cycle and the trigger flag was not detected.

§ Contact your Technical Support Provider.

562

Clot detected in sample tube - sample will not be run

The Instrument has determined that a clot has been detected in the sample tube, but is not clinging to the outside of the probe.

§ Check sample. Spin down tube to remove clot.
§ Rerun sample.

563

Clot detected in sample tube. Clean exterior of sample probe before resuming operation.

The Instrument has determined that a clot has been detected in the sample tube and is clinging to the outside of the probe.

§ Remove Clinging clot.
§ Look in the mirror by the Sample Probe for air bubbles; if air is detected run Clot Prime diagnostics.
§ If Sample Probe has entered gel barrier, change the probe.
§ If the message persists, contact your Technical Support Provider.

564-568

Programmer Error

§ Contact your Technical Support Provider.

570

Programmer Error

Position from reading the bead carousel is outside the valid range.

§ Contact your Technical Support Provider.

571

Unrecognized port

Instrument does not recognize port for sample/reagent barcode reader.

§ Contact your Technical Support Provider.

572

Unrecognized port

Instrument does not recognize port for Bead Pack barcode reader.

§ Contact your Technical Support Provider.

573

Instrument jammed
Please Reboot System

Instrument has recognized an error in the system but cannot identify error. This error should not occur in normal operation.

§ Contact your Technical Support Provider.

575

Sample Pipettor jammed inside incubator only luminometer working

Sample Pipettor is jammed inside the incubator. All attempts to clear jam errors have failed. Only the Luminometer is active.

§ Ensure nothing is blocking the sample pipettor at the reagent/sample pipetting area.
§ Check for misalignment of the Sample Probe at the pipetting area.
§ Check the Sample Probe is not bent.
§ If the message persists, contact your Technical Support Provider.

576

Sample Pipettor jammed above Pipettor position - front end shut down

Sample Pipettor jammed above Reaction Tube. All attempts to clear jam errors have failed.

§ Check the movement of Pipettor is not obstructed.

578

Sample Pipettor is clogged due to clot

The sample pipettor or sample DRD jammed during the clinging clot test.

§ Remove Clinging clot.
§ Look in the mirror by the Sample Probe for air bubbles; if air is detected run Clot Prime diagnostics.
§ If Sample Probe has entered gel barrier, change the probe.
§ If the message persists, contact your Technical Support Provider.

579

Corrective Jam Actions has also jammed going into Pause Mode

The system tried to clear a sample device jam unsuccessfully.

§ See associated error message to determine cause of jam.
§ If the message persists, contact your Technical Support Provider.

580

Sample Carousel has jammed during barcode read going into pause

Sample Carousel has jammed.

§ Check that the sample tube or diluent tube is seated correctly.
§ Check that the Sample Racks are seated correctly.
§ If the message persists, contact your Technical Support Provider.

581

Homing sample devices resulted in a jam returning to Pause Mode

Homing routines have failed during re-initialization, following Error 579.

§ Check for associated error messages and resolve them.
§ If the message persists, contact your Technical Support Provider.

582

Reagent Pipettor has jammed only the luminometer is active

Reagent Pipettor is jammed inside the incubator. All attempts to clear jam errors have failed. Only the Luminometer is active.

§ Ensure nothing is blocking the Reagent pipettor at the reagent/sample pipetting area.
§ Check for misalignment of the Reagent probe at the pipetting area.
§ Check the Reagent probe is not bent.
§ If the message persists, contact your Technical Support Provider.

583

Reagent Pipettor has jammed shutting down sample-reagent pipettors

Reagent Pipettor jammed above Reaction Tube. All attempts to clear jam errors have failed.

§ Ensure nothing is blocking the Reagent pipettor at the reagent/sample pipetting area.
§ Check for misalignment of the Reagent probe at the pipetting area.
§ Check the Reagent probe is not bent.
§ If the message persists, contact your Technical Support Provider.

585

Homing reagent devices resulted in a jam going into pause mode

To clear a Reagent device jam (Error 584) the Instrument attempted to home all reagent devices. However, the homing routine encountered an error.

§ See associated error message to determine the cause of the jam.
§ If the message persists, contact your Technical Support Provider.

586

Homing reagent devices has resulted in a jam returning to pause mode

Homing routines have failed during re-initialization after Error 585.

§ Check for related error messages and resolve them.
§ If the message persists, contact your Technical Support Provider.

587

Reagent Carousel has jammed during barcode read going into Pause

Reagent Carousel has jammed during barcode read.

§ Reseat Wedge or carousel tray.
§ Check Wedge Glide for proper installation.

589

Homing sample tube devices resulted in a jam going into pause mode

The system tried to clear a tube/bead device jam unsuccessfully.

§ See associated error message to determine the cause of the jam.
§ If the message persists, contact your Technical Support Provider.

590

Homing tube loading devices resulted in a jam. Returning to Pause mode.

Homing routines have failed during re-initialization after Error 589.

§ Check for related error messages and resolve them.
§ If the message persists, contact your Technical Support Provider.

591

Bead Carousel has jammed during barcode read going into pause

Bead Carousel has jammed.

§ Check for mispositioned Bead Pack.
§ If the message persists, contact your Technical Support Provider.

592

INSTRUMENT ENTERED FRONT END SHUTDOWN

Device in incubator has jammed.

§ See associated error message to determine cause of the jam.
§ If the message persists, contact your Technical Support Provider.

593

INSTRUMENT ENTERED STOP MODE

Device in the Luminometer has jammed or semaphore errors have shut down instrument.

§ See associated error message to determine cause of the jam.
§ If the message persists, contact your Technical Support Provider.

594

Marking sample tube as bad

Result of physical error on sample tube (e.g., clot detected, empty tube).

§ See associated error message.
§ Check sample volume.
§ Check sample for clot.
§ Check that Sample Probe is not bent.

595

Marking reagent pack as bad

Result of physical error on reagent pack (e.g., empty pack).

§ Check position of Reagent Wedge.
§ Check that Glide is on correctly.
§ Check for sufficient amount of reagent.
§ Check for bubbles on the Wedge.
§ If the message persists, contact your Technical Support Provider.

596

Marking bead pack as bad

Result of physical error on Bead Pack (e.g., failure to dispense three beads).

§ Check for empty Bead Pack.
§ Invert and reseat Bead Pack in Bead Carousel and try again.
§ Visually inspect plunger for obstruction.
§ Manually dispense a bead.
§ If the message persists, contact your Technical Support Provider.

599

Attempting to use a NULL RAMP TABLE. Switching to default speed

Unrecognizable data was passed to the control side.

§ Contact your Technical Support Provider.

600

Jammed while washing the dilution well. Returning to pause mode.

While cleaning the dilution well, a device jammed.

§ Contact your Technical Support Provider.

603

Cannot enter run with the bulk exit chute blocked

Sensor(s) indicate that the solid waste chute is blocked.

§ Check for overfilled or incorrectly seated solid waste container.
§ Check for correct biohazard bags.
§ Check the Waste chute for blockage.
§ Check for clear plastic protruding from the upper trap opening and for plastic pieces in the Solid Waste Container.
§ If the message persists, contact your Technical Support Provider.

604

Bulk Exit Chute is blocked. Entering pause mode

Sensor(s) indicate that the solid waste chute is blocked.

§ Check for overfilled or incorrectly seated solid waste container.
§ Check for correct biohazard bags.
§ Clear the Exit Chute.
§ Check for clear plastic protruding from the upper trap opening and for plastic pieces in the Solid Waste Container.
§ If the message persists, contact your Technical Support Provider.

605

Tube Transport is not in position. Tube might be on component deck

Occurs after the Instrument experiences unusual stop mode and a tube may have been left on the transport chain. The tube will fall on the component deck during initialization.

§ Check for associated error message to determine the cause.
§ If the message persists, contact your Technical Support Provider.

606

Processor Shuttle has jammed

Processor Shuttle has jammed.

§ Remove mis-positioned Reaction Tube.
§ If the message persists, contact your Technical Support Provider.

611

Homing Bead Carousel has resulted in a jam. In pause mode now

Bead Carousel has jammed for a third time as it has attempted to clear jams.

§ If the message persists, contact your Technical Support Provider.

612

Homing Bead Dispenser has resulted in a jam. In pause mode now.

Bead Dispenser has jammed for a third time as it has attempted to clear jams.

§ If the message persists, contact your Technical Support Provider.

613

Homing Tube Indexer has resulted in a jam. In pause mode now

Tube Indexer has jammed for a third time as it has attempted to clear jams.

§ Verify correct Reaction Tube is used.
§ Check for malformed tube or tube abnormalities.
§ Visually inspect chain for any tube abnormality.
§ If the message persists, contact your Technical Support Provider.

614

Homing Tube Transport has resulted in a jam. In pause mode now

Tube Transport has jammed for a third time as it has attempted to clear jams.

§ Verify correct Reaction Tube is used.
§ Check for malformed tube or tube abnormalities.
§ Visually inspect chain for any tube abnormality.
§ If the message persists, contact your Technical Support Provider.

615

In pause now. Remove reaction tube in front of the processor shuttle

Processor shuttle has jammed and not recovered.

§ Check for obstruction near the Reagent/Sample pipetting area.
§ If the message persists, contact your Technical Support Provider.

618

Sample Probe level sense error in Dilution Well. Entering Sample Pause mode.

Instrument did not level sense in the dilution well.

§ Check for a bent probe.
§ Check probe angle.
§ Check that the dilution well insert is seated correctly.
§ If the message persists, contact your Technical Support Provider.

619

Third bead pack marked bad in a row. Entering Bead Pause Mode.

Third Bead Pack marked bad in a row. Entering Bead Pause Mode.

§ Reseat Bead Pack in Bead Carousel and try again.
§ Visually inspect plunger for obstruction.
§ Manually dispense a bead if first two steps do not correct.
§ If the message persists, contact your Technical Support Provider.

620

Unknown ucMode detected. Entering Stop Mode.

User side has sent unrecognizable instrument status mode.

§ Contact your Technical Support Provider.

622

Inner rack door movement exceeded maximum steps. Contact Technical Service.

§ Contact your Technical Support Provider.

624

Attention!! - water probe is out.

Water Probe sensor is not detecting the probe.

§ Reseat Water Probe.
§ If the message persists, contact your Technical Support Provider.

625

Attention!! - substrate probe is out.

Substrate Probe sensor is not detecting the probe.

§ Reseat Substrate Probe.
§ If the message persists, contact your Technical Support Provider.

626

Attention!! - trigger probe is out.

The plug that is used in place of the trigger probe is not detected by the sensor.

§ Contact your Technical Support Provider.

627

Reaction Tube is missing at bead drop position. Rerunning test.

The sensor at the bead drop position is not detecting a tube.

§ Check Tube Hopper for Reaction tubes.
§ Check for obstruction in the Orientation chute.
§ If the message persists, contact your Technical Support Provider.

628

Tube at indexer disk sensor is struck high.

Sensor at the bottom of the tube chute continues to see a tube when none can be there.

§ Check for mispositioned tube in front of sensor.
§ If the message persists, contact your Technical Support Provider.

629

Tube shaker sensor is stuck high.

Sensor at Tube Shaker continues to see a tube when none should be there.

§ Contact your Technical Support Provider.

630

Tube ladder sensor is stuck high.

Sensor at ladder continues to see a tube when none should be there.

§ Ensure the front and side panel doors are closed.
§ Select the **Diagnostics** icon located on the desktop.
§ Select the Hopper Elevator Test.
§ Manually move reaction cups away from escalator.
§ Once the hopper elevator advances, stop the diagnostic.
§ Exit Diagnostics and select **RUN IMMULITE**.
§ If the message persists, contact your Technical Support Provider.

631

Reaction tube at pipette position sensor is stuck high.

Sensor at pipette position continues to see a tube when none should be there.

§ Contact your Technical Support Provider.

632

Bulk Exit chute is blocked. Entering Stop mode.

The solid waste chute is blocked.

§ Check for overfilled or incorrectly seated solid waste container.
§ Check for correct biohazard bags.
§ Check the Waste chute for blockage.
§ Check for clear plastic protruding from the upper trap opening and for plastic pieces in the Solid Waste Container.
§ If the message persists, contact your Technical Support Provider.

637

DPRAM semaphore locked up for longer than 18 sec. Entering STOP mode.

Communication between the User and Control sides has been interrupted.

§ Contact your Technical Support Provider.

640

Wash spinner is not operating correctly. Rerunning test.

Wash Spinner has failed to reach appropriate speed while processing test.

§ Contact your Technical Support Provider.

641

Cannot enter RUN because wash spinner is not operating correctly.

Wash Spinner has failed to reach appropriate speed during initialization from Stop to Run.

§ Contact your Technical Support Provider.

642

Inner rack door communication error. Contact Technical Service.

§ Contact your Technical Support Provider.

646

Fatal Sample Carousel position mismatch, carousel was not read. Please Call Technical Service immediately.

Sample carousel reread triggered by Error 642, 643, 644, 645 or 655 has resulted in another carousel reading error.

§ Check integrity of barcode labels.
§ Manually assign sample identification.
§ If message persists, contact your Technical Support Provider.

650

Fatal Reagent Carousel position mismatch, carousel was not read. Please Call Technical Service immediately.

Reagent carousel reread triggered by Error 647, 648, 649 or 656 has resulted in another carousel reading error.

§ Check integrity of label.
§ Check position of reagent wedge.
§ If message persists, contact your Technical Support Provider.

654

Fatal Bead Carousel position mismatch, carousel was not read. Please contact Technical Services immediately.

Fatal Bead Carousel position mismatch, carousel was not read.

§ Contact your Technical Support Provider.

655

Rack detected in rack loader after load operation complete. Check Rack Loader area.

A rack was still detected in the rack loader after a load operation completed. Causes include, but are not limited to: Debris in front of rack in place sensor.

§ Check Rack Loader area.

658

Sample Barcode misread during carousel read.

The barcode reader returned two different strings for the same accession number on a sample tube.

§ Check integrity of barcode labels.
§ Manually assign sample identification.
§ If the message persists, contact your Technical Support Provider.

659

Mismatch between first and second read of accession number.

After the second carousel read, a mismatch between the accession numbers for a sample tube was detected.

§ Check integrity of barcode labels.
§ Manually assign sample identification.
§ If the message persists, contact your Technical Support Provider.

660

Mismatch between first and second read of the rack ID.

After the second carousel read, a mismatch between the rack identifiers for the sample carousel was detected.

§ Check integrity of barcode label.
§ Ensure the rack is seated correctly.
§ If the message persists, contact your Technical Support Provider.

661

Mismatch between first and second read of the Reagent Pack barcode.

After the second carousel read, a mismatch between the Reagent pack barcodes was detected.

§ Check integrity of barcode label.
§ Ensure wedges are seated correctly.
§ If the message persists, contact your Technical Support Provider.

662

Mismatch between first and second read of the Bead Pack barcode.

After the second carousel read, a mismatch between the Bead pack barcodes was detected.

§ Check integrity of barcode label.
§ Ensure Bead Packs are seated correctly.
§ If the message persists, contact your Technical Support Provider.

670

RGT_BKLS.iml file is missing

File could not be found.

§ Contact your Technical Support Provider.

671

DilWelLS.IML file is missing

File could not be found.

§ Contact your Technical Support Provider.

672

PRIMECNT.IML file is missing

File could not be found.

§ Contact your Technical Support Provider.

673

Bad mix at Dilution Well

Sample and diluent were not properly mixed in the Sample Dilution Well.

§ Contact your Technical Support Provider.

676

ReagFLS.IML file is missing.

File could not be found.

§ Contact your Technical Support Provider.

677

Reagent Probe False Level Sensed out of tolerance.

A Reagent z-Pipettor level sense motion has level sensed higher than expected.

§ Check the position of the Reagent Wedge in the Reagent Carousel.
§ Make sure the Reagent Wedge lid is positioned correctly and that it moves freely.
§ Ensure no bubbles are in the reagent.
§ Check for a reagent fluid film under the Wedge Glide.
§ Check for splashing on or near the Reagent Probe.
§ Replace the Reagent Wedge with a new one and try again.
§ If the message persists, contact your Technical Support Provider.

679

Clot detection mechanism failure. Pre-treated assays in progress may not result. Contact Technical Service.

Peak clot feedback is less than minimum.

§ Contact your Technical Support Provider.

680

Tube size discrepancy detected scanning Rack 1, rescanning all sample racks.

Instrument has detected a change on the sample rack that was not being rescanned.

§ If the message persists, contact your Technical Support Provider.

681

Tube size discrepancy detected scanning Rack 2, rescanning all sample racks.

Instrument has detected a change on the sample rack that was not being rescanned.

§ If the message persists, contact your Technical Support Provider.

682

Tube size discrepancy detected scanning Rack 3, rescanning all sample racks.

Instrument has detected a change on the sample rack that was not being rescanned.

§ If the message persists, contact your Technical Support Provider.

683

Tube size discrepancy detected scanning Rack 4, rescanning all sample racks.

Instrument has detected a change on the sample rack that was not being rescanned.

§ If the message persists, contact your Technical Support Provider.

684

Tube size discrepancy detected scanning Rack 5, rescanning all sample racks.

Instrument has detected a change on the sample rack that was not being rescanned.

§ If the message persists, contact your Technical Support Provider.

685

Tube size discrepancy detected scanning Rack 6, rescanning all sample racks.

Instrument has detected a change on the sample rack that was not being rescanned.

§ If the message persists, contact your Technical Support Provider.

686

Missing the file SAMPSCAN.IML. Sample access monitoring will be turned off.

Missing the file SAMPSCAN.IML.

§ If the message persists, contact your Technical Support Provider.

687

The feature to validate reagent level sensing has been disabled. Please contact Technical Service if this is not an intended configuration.

The feature to validate reagent level sensing has been disabled.

§ If this is not the intended configuration, contact your Technical Support Provider.

688

An event semaphore timed out. Please call Technical Service.

Reagent arm did not complete in time for the next cycle.

§ Contact your Technical Support Provider.

689

An event semaphore timed out. Please call Technical Service.

Sample arm did not complete in time for the next cycle.

§ Contact your Technical Support Provider.

690

An event semaphore timed out. Test Reordered.

Reagent arm did not complete in time for the next cycle.

§ Contact your Technical Support Provider.

691

An event semaphore timed out. Test Reordered.

Reagent arm did not complete in time for the next cycle.

§ Contact your Technical Support Provider.

692

Test was reordered because of a Clot Detection Board failure.

Malfunction in the clot detection board while a sample is being aspirated.

§ If the message persists, contact your Technical Support Provider.

693

Instrument hardware failure. Entering Stop Mode.

Instrument hardware failure.

§ Contact your Technical Support Provider.

694

Configured sample dispense volume is greater than aspirated volume. Please contact Technical Service.

The Sample dispense volume in the Kit barcode is greater than the Sample Aspiration volume for the given cycle.

§ Contact your Technical Support Provider.

695

Configured reagent dispense volume is greater than aspirated volume. Please contact Technical Service

The Reagent dispense volume in the Kit barcode is greater than the Reagent Aspiration volume, inclusive of the paired volume, for the given cycle.

§ Contact your Technical Support Provider.

699

Error reading configuration file TubeTran.iml. Please contact Technical Service.

Error reading the TubeTran.iml file prevented update of the parameters into Software.

§ Contact your Technical Support Provider.

700

Transport Chain sensor failure. Please contact Technical Service before entering Run.

Transport Chain sensor failure.

§ Contact your Technical Support Provider.

701

Wash spinner is not operating correctly.

Wash spinner is not operating correctly.

§ Contact your Technical Support Provider.

702

Water Probe sensor error. Is probe fully seated?

Water Probe sensor error.

§ Check if probe fully seated?
§ If the message persists, contact your Technical Support Provider.

703

Water probe is not seated correctly. Going into Pause mode.

Water probe is not seated correctly. Tests that reach the wash step will be marked bad and re-run. Pause mode is entered to prevent new tests from launching.

§ If the message persists, contact your Technical Support Provider.

704

Error has forced Error Pause Mode. Run Button is deactivated until Stop Mode is entered. Wait for tests in progress to complete.

Error has forced Error Pause Mode.

§ To clear error, select **STOP**.
§ After Stop mode entered, select **RUN**.

705

Unable to open the file ErrLim2k.iml. Default values will be used.

Failure to open the file causes the error.

§ If the message persists, contact your Technical Support Provider.

706

Error reading error limit configuration file. Default values will be used.

Data is missing from the file.

§ If the message persists, contact your Technical Support Provider.

709

Test reordered due to Tube Loader error.

An unrecoverable jam occurred on a tube loader motor. The test is marked bad and reordered.

§ Clear the jam.
§ If the message persists, contact your Technical Support Provider.

710

The SmsCfg.iml file could not be opened, default VersaCell transfer values will be used.

The SmsCfg.iml file could not be opened

§ Contact your Technical Support Provider.

711

A timing constraint in the SmsCfg.iml file was invalid or could not be read, the default value will be used

A value in the .iml configuration is set incorrectly manually

§ If the message persists, contact your Technical Support Provider.

712

A timing constraint in the SmsCfg.iml file was invalid or could not be read, the default value will be used.

A value in the .iml configuration is set incorrectly manually

§ If the message persists, contact your Technical Support Provider.

713

A timing constraint in the SmsCfg.iml file was invalid or could not be read, the default value will be used.

A value in the .iml configuration is set incorrectly manually

§ If the message persists, contact your Technical Support Provider.

714

A timing constraint in the SmsCfg.iml file was invalid or could not be read, the default value will be used.

A value in the .iml configuration is set incorrectly manually

§ If the message persists, contact your Technical Support Provider.

715

A timing constraint in the SmsCfg.iml file was invalid or could not be read, the default value will be used.

A value in the .iml configuration is set incorrectly manually

§ If the message persists, contact your Technical Support Provider.

716

VersaCell-IMMULITE communications have failed. The VersaCell is no longer transferring samples. Press the PAUSE button on the IMMULITE to re-establish communication. Please remove the samples from the Automation rack prior to selecting RUN.

VersaCell-IMMULITE communications have failed. The VersaCell is no longer transferring samples.

§ Select **PAUSE**.
§ Remove the samples from the Automation rack.
§ Select **RUN**.

719

A timing constraint in the SmsCfg.iml file was invalid or could not be read, the default value will be used.

The communications timeout deadline data could be read from the SMSCfg.iml files or was outside the valid range.

§ If the message persists, contact your Technical Support Provider.

726

Message has unknown Message ID.

The system has received an invalid message from the VersaCell.

§ If the message persists, contact your Technical Support Provider.

727

Unknown container type in Prepare To Sample Message.

The VersaCell reports a sample tube is an unexpected size.

§ Check the sample tubes.

728

Sample ID length is not compliant with message length.

The system has received an invalid message from the VersaCell.

§ If the message persists, contact your Technical Support Provider.

729

Received a new Prepare to Sample before sample transfer was completed.

VersaCell sent message when it was not expected.

§ If the message persists, contact your Technical Support Provider.

730

Sequence number error in Prepare To Sample message.

VersaCell did not increment message number correctly.

§ If the message persists, contact your Technical Support Provider.

731

Prepare To Sample message was received before REINIT1.

VersaCell sent message before reinitialization is complete.

§ If the message persists, contact your Technical Support Provider.

732

Unknown transfer status in Sample Transfer Status message.

VersaCell sent the wrong status.

§ If the message persists, contact your Technical Support Provider.

733

Sample Transfer Status message has the wrong length.

VersaCell sent Sample Transfer Status message has the wrong length.

§ If the message persists, contact your Technical Support Provider.

734

Sequence number error in Sample Transfer Status message.

VersaCell did not increment message number correctly.

§ If the message persists, contact your Technical Support Provider.

735

Sample Transfer Status message was received before REINIT1.

The system was unable to properly communicate with the VersaCell.

§ On the VersaCell, select **STOP**.
§ Select **LOGOFF** and log off the VersaCell.
§ Restart the VersaCell.
§ If the message persists, contact your Technical Support Provider.

736

Query Analyzer Status message has the wrong length.

VersaCell query message has wrong length.

§ Contact your Technical Support Provider.

737

Sequence number error in Query Analyzer Status message.

Sequence number error in Query System Status message.

§ Contact your Technical Support Provider.

738

Query Analyzer Status message was received before REINIT 1

System was unable to properly communicate with the VersaCell.

§ On the VersaCell, select **STOP**.
§ Select **LOGOFF** and log off the VersaCell.
§ Restart the VersaCell.
§ If the message persists, contact your Technical Support Provider.

739

Reinitialize Communications message has unknown Recovery Type.

VersaCell used unknown protocol.

§ If the message persists, contact your Technical Support Provider.

740

Reinitialize Communications message has the wrong length.

VersaCell message has the wrong length.

§ If the message persists, contact your Technical Support Provider.

741

Unknown message ID.

VersaCell sent unknown message.

§ If the message persists, contact your Technical Support Provider.

742

ACK has wrong length.

VersaCell ACK message has a length that does not follow protocol.

§ If the message persists, contact your Technical Support Provider.

743

Sequence number in ACK doesn't match last sent message.

The sequence number in the ACK (acknowledgement between the VersaCell and the system) does not match the sequence number of any message sent and was therefore not acknowledged by the Control computer.

§ Contact your Technical Support Provider.

744

ACK was not expected.

All messages sent by the Control computer have been acknowledged; this ACK (acknowledgement between the VersaCell and the system) is invalid.

§ Contact your Technical Support Provider.

745

Cannot match ACK to a sent message.

An ACK (acknowledgement between the VersaCell and the system) could not be matched to the message sent between the system and the VersaCell.

§ Contact your Technical Support Provider.

746

NAK has the wrong length.

VersaCell sends NAK that does not follow the length protocol.

§ Contact your Technical Support Provider.

747

Sequence number in NAK doesn't match last sent message.

VersaCell sends NAK in response to the wrong message.

§ Contact your Technical Support Provider.

748

Cannot match NAK to a sent message.

VersaCell sends NAK in response to the message that was never sent.

§ Contact your Technical Support Provider.

749

Message has an invalid message type.

VersaCell sends a message other than ACK, NAK, or data.

§ Contact your Technical Support Provider.

750

AutoSendQueue has overflowed.

The serial communication is broken.

§ Contact your Technical Support Provider.

751

Accession number to be sent is longer than 20 char.

Programming error

§ Contact your Technical Support Provider.

752

Cannot switch into INTEGRATED mode when not in STOP.

The Control computer received a command to switch to Integration mode while the system was running or paused.

§ On the system, select **STOP**.
§ From the IMMULITE 2000 Home screen, select **Configure** from the **Configurations** menu.
§ Select **Instrument Mode**.
§ Select the Integrated option and select **Save**.
§ Select the **Save**.
§ To begin processing samples, select the **RUN**.
§ If the message persists, contact your Technical Support Provider.

753

Cannot switch into STAND ALONE mode when not in STOP.

The Control computer received a command to switch to Non-Integrated mode while the system was running or paused.

§ On the system, select **STOP**.
§ From the IMMULITE 2000 Home screen, select **Configure** from the **Configurations** menu.
§ Select **Instrument Mode**.
§ Select the Non-Integrated option and select **Save**.
§ Select **Save**.
§ To begin processing samples, select **RUN**.
§ If the message persists, contact your Technical Support Provider.

754

Switching to PAUSE due to timeout. Automation may be active!!!

Attempting to switch to Pause mode after communication timeout with VersaCell.

§ To continue processing samples, select **RUN**.

755

Switching to STOP due to timeout. Automation may be active!!!

Attempting to switch to stop mode after communication timeout with VersaCell.

§ To continue processing samples, select **RUN**.

756

Test made bad by Reinitialize 1 command.

Re-initialize message was received while a sample was waiting to be pipette.

§ This message is for informational purposes only. No action is required.

757

Please clear the IMMULITE 2000 of automation tubes.

A fault was detected when the Sample Carousel was interrogated at start up.

§ On the system, open the Top Cover and remove the sample tubes from Automation Rack on the Sample Carousel.
§ On the system, select **RUN**.
§ If the sample tubes were not run, place them on the VersaCell and rerun them.

758

Received Reinitialize 0

VersaCell is trying to reset the sequence numbers.

§ This message is for informational purposes only. No action is required.

759

Received Reinitialize 1

VersaCell is trying to reset the communications.

§ This message is for informational purposes only. No action is required.

760

Automation tube appears to have been misplaced. Going to sample pause.

A sample tube was improperly placed on the system.

§ On the system, open the Top Cover and remove the sample tubes from Automation Rack on the Sample Carousel.
§ Select **RUN**.
§ If the sample tubes were not run, place them on the VersaCell and rerun them.

761

Unrecognized port in DevinitUART3.

Error in communication between IMMULITE and VersaCell.

§ Contact your Technical Support Provider.

762

IMMULITE time out waiting for Place – Sample SMS Transfer Reply. Going to sample pause.

Sample tube was not placed within the allotted time. The system timed out waiting for a reply from the VersaCell.

§ On the system, open the Top Cover and remove the sample tubes from Automation Rack on the Sample Carousel.
§ On the system, select the **RUN** button.
§ If the sample tubes were not run, place them on the VersaCell and rerun them.

763

IMMULITE time out waiting for Pick – Sample Transfer Reply. Going to sample pause.

Sample tube was not picked up by the VersaCell within the allotted time. The system timed out waiting for a reply from the VersaCell.

§ On the system, open the Top Cover and remove the sample tubes from Automation Rack on the Sample Carousel.
§ On the system, select the **RUN** button.
§ If the sample tubes were not run, place them on the VersaCell and rerun them.

764

Please clear the IMMULITE 2000 of automation tubes. Going to sample pause.

A fault was detected when the Sample Carousel was interrogated.

§ On the system, open the Top Cover and remove the sample tubes from Automation Rack on the Sample Carousel.
§ On the system, select the **RUN** button.
§ If the sample tubes were not run, place them on the VersaCell and rerun them.

765

Please clear the IMMULITE 2000 of automation tubes. Going to sample pause.

A fault was detected when the Sample Carousel was interrogated.

§ On the system, open the Top Cover and remove the sample tubes from Automation Rack on the Sample Carousel.
§ On the system, select the **RUN** button.
§ If the sample tubes were not run, place them on the VersaCell and rerun them.

766

Please clear the IMMULITE 2000 of automation tubes. Going to sample pause.

A fault was detected when the Sample Carousel was interrogated.

§ On the system, open the Top Cover and remove the sample tubes from Automation Rack on the Sample Carousel.
§ On the system, select the **RUN** button.
§ If the sample tubes were not run, place them on the VersaCell and rerun them.

768

Please clear the IMMULITE 2000 of automation tubes. Going to sample pause.

A fault was detected when the Sample Carousel was interrogated.

§ On the system, open the Top Cover and remove the sample tubes from Automation Rack on the Sample Carousel.
§ On the system, select the **RUN** button.
§ If the sample tubes were not run, place them on the VersaCell and rerun them.

770

Please clear the IMMULITE 2000 of automation tubes. Going to sample pause.

A fault was detected when the Sample Carousel was interrogated.

§ On the system, open the Top Cover and remove the sample tubes from Automation Rack on the Sample Carousel.
§ On the system, select the **RUN** button.
§ If the sample tubes were not run, place them on the VersaCell and rerun them.

771

Robot Status message has the wrong length.

VersaCell status message does not follow length protocol.

§ This message is for informational purposes only. No action is required.

772

Sequence number error in Robot Status message.

VersaCell status message does not match any sent message.

§ This message is for informational purposes only. No action is required.

773

Robot Status message was received before REINIT1.

System was unable to properly communicate with the VersaCell.

§ On the VersaCell, select the **STOP** button.
§ Select the **LOGOFF** button and log off the VersaCell.
§ Restart the VersaCell.
§ If the message persists, contact your Technical Support Provider.

774

Logoff message has the wrong length.

The log off message does not follow the length protocol.

§ This message is for informational purposes only. No action is required.

775

Data Error on UART3.

Hardware problem in serial card.

§ Contact your Technical Support Provider.

786

Error reading configuration file ShakerBar.iml.

Missing ShakerBar.imlfile.

§ Contact your Technical Support Provider.

787

Error reading configuration file MicroPed.IML. Microsample dead volume is increased. Contact Technical Service

Either the file did not open, is not present, or the data is corrupted causing a checksum error.

§ Contact your Technical Support Provider.

788

Insufficient sample to perform Microsampling

There is not enough sample in the microsample tube to run the given test. The sample tube is marked bad and the test is reordered.

§ Add additional sample and repeat.

790

Test made bad by VersaCell communications timeout.

The VersaCell did not respond in time to a message from the IMMULITE.

§ If the message persists, contact your Technical Support Provider.

791

Test made bad by VersaCell communications timeout.

The VersaCell sent a message to the IMMULITE that there was a transfer failure while attempting to pick or place a tube on the IMMULITE.

§ If the message persists, contact your Technical Support Provider.

792

Missing the file PIPOFFST.IML.

Missing the file PIPOFFST.IML.

§ Contact your Technical Support Provider.

793

Invalid read of PIPOFFST.IML.

Invalid values in PIPOFFST.IML

§ Contact your Technical Support Provider.

794

Error reading control side file Dilution.iml. Instrument startup is aborted.

Error reading control side file Dilution.iml.

§ Contact your Technical Support Provider.

796

Sample Pipettor Z jam inside Incubator.

The sample arm jammed while moving in the Z-Axis direction inside the incubator/ reagent space when recovering from a jam.

§ Select **STOP**.
§ Contact your Technical Support Provider.

797

Sample Pipettor X jam. Entering Pause Mode. Press Run to continue

The sample arm jammed while moving in the X-Axis direction inside the incubator/ reagent space when recovering from a jam.

§ If the message persists, contact your Technical Support Provider.

798

Reagent Pipettor Z jam inside Incubator.

The reagent arm jammed while moving in the Z-Axis direction inside the incubator/sample space when recovering from a jam.

§ Select **STOP**.
§ Contact your Technical Support Provider.

799

Reagent Pipettor X jam. Entering Pause Mode. Press Run to continue.

The reagent arm jammed while moving in the X-Axis direction inside the incubator/sample space when recovering from a jam.

§ If the message persists, contact your Technical Support Provider.

800

Test reordered - Instrument power failure.

The software detected a PMT power glitch after reading PMT results.

§ Contact your Technical Support Provider.

801

A request mutex call timed out. Contact Technical Service.

Unexpected Error. On 2000 - The sample Pipettor timed out waiting to gain exclusive access to enter the incubator.

§ Contact your Technical Support Provider.

802

A request mutex call timed out. Contact Technical Service.

Unexpected Error. The sample Pipettor timed out waiting to gain exclusive access to enter the incubator.

§ Contact your Technical Support Provider.

803

A request mutex call timed out. Contact Technical Service.

Unexpected Error. The sample Pipettor timed out waiting to gain exclusive access to enter the incubator.

§ Contact your Technical Support Provider.

804

A request mutex call timed out. Contact Technical Service.

Unexpected Error. The sample Pipettor timed out waiting to gain exclusive access to enter the incubator.

§ Contact your Technical Support Provider.

805

A request mutex call timed out. Contact Technical Service.

Unexpected Error. The sample Pipettor timed out waiting to gain exclusive access to enter the incubator.

§ Contact your Technical Support Provider.

806

A request mutex call timed out. Contact Technical Service.

Unexpected Error. The sample Pipettor timed out waiting to gain exclusive access to enter the incubator.

§ Contact your Technical Support Provider.

808

Instrument power failure, entering Stop mode. Contact Technical Service.

The PMT power failed signal is detected for 3 consecutive cycles in Run or Pause mode.

§ Contact your Technical Support Provider.

810

Bead Carousel error. Going to Bead Pause Mode. Check that Bead Packs are properly inserted.

An unrecoverable jam occurred on the Bead carousel.

§ Check for improperly inserted Bead pack.

811

Bead Dispenser error. Going to Bead Pause Mode. Check that Bead Packs are properly inserted.

An unrecoverable jam occurred on the bead dispenser.

§ Check for improperly inserted Bead pack.
§ This error could also indicate a hardware failure.

812

Tube Indexer error. Going to Bead Pause Mode. Check Tube Indexer.

An unrecoverable jam occurred on the tube indexer.

§ Check the tube indexer and tube queue.
§ The indexer may have a deformed tube jamming it.

814

Error reading configuration file TubeTop.IML. Contact Technical Service.

§ Contact your Technical Support Provider.

815

Failed to detect bottom of Tube Top Sample Cup.

Tube Top Sample Cup was not detected during the bottom finding routine.

§ Check that you placed the tube top cup in sample tube.

816

Unexpected error. Contact Technical Service.

§ Contact your Technical Support Provider.

817

Unable to load rack. Eject a rack if the sample carousel is full, or press Run to scan the carousel.

Either the Sample Carousel is full, or no known empty position to load a rack into is available. Empty Positions were set to “Unknown”.

§ If the sample carousel is full, eject a rack.
§ To scan the carousel, select **RUN**.

818

Close the sample door to eject rack.

An eject was ordered, but the external sample door is open.

§ Remove any rack in the loader area, and close the external sample door.

819

Remove rack from loader to allow rack to eject.

An eject was ordered, but there’s a rack in the loader area.

§ Remove any rack in the loader area, and close the external sample door.
§ If no rack is present, this may indicate a rack in place sensor failure.

820

Unexpected error. Contact Technical Service.

§ Contact your Technical Support Provider.

821

Error reading configuration file AutoStrt.IML. System will continue. Contact Technical Service.

§ Contact your Technical Support Provider.

822

Probe clean tube not found for AutoStart. Probe clean was not performed.

AutoStart Probe clean tube not found in Sample Carousel.

823

Sample pipettor has jammed in probe clean tube. Probe clean was not performed.

Sample pipettor arm jam or tip jam error.

§ Contact your Technical Support Provider.

824

False level sense error in probe clean tube. Probe clean was not performed.

False Level sense error. The sample probe level-sensed above the probe clean tube during AutoStart.

§ Check if a (wet) cap is on the probe clean tube.
§ Otherwise someone must have touched the probe, or the level sense hardware is oversensitive .

825

The sample probe did not levelsense in the Probe Clean tube. Check tube for probe clean solution.

The sample probe did not levelsense in the Probe Clean tube or did not level sense in the reaction cup.

§ Check tube for probe clean solution.

826

Failed to load reaction tube at Tube Indexer.

While getting a tube for AutoStart (probe clean, wash prime, or substrate dispense), the Tube indexer did not see a tube. Either the tube queue is clogged, or the hopper is completely empty.

§ Check the fill of the tube hopper. Check for jammed tubes in reaction tube chute.
§ If problem persists, contact your Technical Support Provider.

827

Reaction tube not found at Incubator pipette position. Aborting AutoStart routine.

While getting a tube for AutoStart (probe clean, wash prime), the tube was not seen in the Incubator after the processor shuttle push. Possibly a sensor error, or the tube did not push in far enough for the sensor to see.

§ If problem persists, contact your Technical Support Provider.

831

Unexpected error. AutoStart not performed. Contact Technical Service.

§ Contact your Technical Support Provider.

832

Unexpected error. AutoStart not performed. Contact Technical Service.

§ Contact your Technical Support Provider.

833

Unexpected error. AutoStart not performed. Contact Technical Service.

§ Contact your Technical Support Provider.

834

Unexpected error. AutoStart not performed. Contact Technical Service.

§ Contact your Technical Support Provider.

835

Unexpected error. AutoStart not performed. Contact Technical Service.

§ Contact your Technical Support Provider.

836

Unexpected error. AutoStart not performed. Contact Technical Service.

§ Contact your Technical Support Provider.

837

Unexpected error. AutoStart not performed. Contact Technical Service.

§ Contact your Technical Support Provider.

838

Unexpected error. AutoStart not performed. Contact Technical Service.

§ Contact your Technical Support Provider.

839

Unexpected error. AutoStart not performed. Contact Technical Service.

§ Contact your Technical Support Provider.

840

Unexpected error. AutoStart not performed. Contact Technical Service.

§ Contact your Technical Support Provider.

841

Unexpected error. AutoStart not performed. Contact Technical Service.

§ Contact your Technical Support Provider.

842

Unexpected error. AutoStart not performed. Contact Technical Service.

§ Contact your Technical Support Provider.

843

Unexpected error. AutoStart not performed. Contact Technical Service.

§ Contact your Technical Support Provider.

844

Unexpected error. AutoStart not performed. Contact Technical Service.

§ Contact your Technical Support Provider.

845

Unexpected error. AutoStart not performed. Contact Technical Service.

§ Contact your Technical Support Provider.

846

Unexpected error. AutoStart not performed. Contact Technical Service.

§ Contact your Technical Support Provider.

847

Invalid tube or rack for probe clean. Probe clean will not be performed.

Probe clean tube was wrongly placed into a dedicated rack, within micro-sample tube, or other unknown tube type is assigned.

§ If the message persists, contact your Technical Support Provider.

848

Failed to home all motors during AutoStart. AutoStart will not be performed.

Home all motors failed at the beginning of AutoStart.

§ If repeated attempts fail, contact your Technical Support Provider.

849

Failed to scan Sample Carousel. AutoStart will not be performed.

Scan of Sample carousel failed prior to AutoStart. May have been a jam. If repeated attempts fail it is likely a configuration, mechanical, or hardware issue

§ If repeated attempts fail, contact your Technical Support Provider.

850

Auto Substrate Dispense parameter is out of range. Auto Substrate Dispense will not be performed. Contact Technical Service.

§ Contact your Technical Support Provider.

851

Tube not found at Incubator pipette position. Aborting Auto Substrate Dispense routine. Manually prime the substrate.

While getting a tube for Substrate Dispense, the tube was not seen in the Incubator after the processor shuttle push. Possibly a sensor error, or the tube did not push in far enough for the sensor to see.

§ If it persists, have the Inc0 sensor checked.

852

Unexpected error during Auto Substrate Dispense routine. Auto Substrate Dispense will not be performed. Contact Technical Service.

§ Contact your Technical Support Provider.

853

Substrate Probe is not in place. Aborting Auto Substrate Dispense routine. Manually prime the substrate.

Error during Auto Substrate Dispense. The Substrate probe was not in place at the time of dispense of substrate.

§ Please put the substrate probe back in place.

854

Failed to load reaction tube. AutoStart not performed.

Error during AutoStart. Tube did not physically reach the Incubator pipette position.

§ Check tube load area.
§ Check that tube hopper is not empty.
§ Retry AutoStart.

855

Tube Lifter error.

Error during AutoStart. Possibly tube lifter jammed. Wash Station tube lifter may have jammed.

§ Check Wash Station tube lifter.
§ Retry AutoStart.

856

Wash Station spinner failed.

Error during AutoStart. Error with the Wash Station spinner motor. Wash Station Spinner failed.

§ Retry AutoStart

857

Water Probe is not in place.

The Water probe is not in place. Error occurred during AutoStart.

§ Please put the water probe back in place.
§ Retry AutoStart.

860

Failed to home all motors. Auto Substrate Dispense will not be performed. Contact Technical Service.

§ Contact your Technical Support Provider.

861

Unexpected error during Auto Substrate Dispense. Auto Substrate Dispense will not be performed. Contact Technical Service.

§ Contact your Technical Support Provider.

862

Unexpected error during Auto Substrate Dispense. Auto Substrate Dispense will not be performed. Contact Technical Service.

§ Contact your Technical Support Provider.

863

Unexpected error during Auto Substrate Dispense. Auto Substrate Dispense will not be performed. Contact Technical Service.

§ Contact your Technical Support Provider.

864

Unexpected error during Auto Substrate Dispense. Auto Substrate Dispense will not be performed. Contact Technical Service.

§ Contact your Technical Support Provider.

867

Unexpected error. Contact Technical Service.

§ Contact your Technical Support Provider.

868

Unexpected error. Contact Technical Service.

§ Contact your Technical Support Provider.

869

Unexpected error. Contact Technical Service.

§ Contact your Technical Support Provider.

870

Unexpected error. Contact Technical Service.

§ Contact your Technical Support Provider.

871

Unexpected error. Contact Technical Service.

§ Contact your Technical Support Provider.

872

Unexpected error. Contact Technical Service.

§ Contact your Technical Support Provider.

873

Unexpected error. Contact Technical Service.

§ Contact your Technical Support Provider.

874-879

Unexpected error. Contact Technical Service.

§ Contact your Technical Support Provider.

880

An empty sample rack was detected. Rack will be ejected.

A sample rack with no tubes was inserted, or a rack with tubes was inserted, but the tubes were not detected by the tube height sensors or the barcode reader.

§ If the message persists, contact your Technical Support Provider.

881-886

Unexpected error. Contact Technical Service.

§ Contact your Technical Support Provider.

887

Inner rack door will not open. Close all covers. Reopen main cover.

Normally, when opening the cover, the rack transfer door opens automatically. If you have the external rack loader door opened, this will be skipped. Closing the rack loader door prior to popping the hood will prevent this.

§ Close all covers.
§ Reopen main cover.

888

Unexpected error. Contact Technical Service.

§ Contact your Technical Support Provider.

889

Rack Loader door is open.

The rack loader door is open during initialization. Occurs if the rack loader door is opened. May also occur if sensor fails or becomes disconnected.

§ Close the door to continue.
§ If the message persists, contact your Technical Support Provider.

890-892

Unexpected error. Contact Technical Service.

§ Contact your Technical Support Provider.

893

Error reading configuration file RLCfg.IMR. Contact Technical Service.

§ Contact your Technical Support Provider.

894

Unexpected error. Contact Technical Service.

§ Contact your Technical Support Provider.

895

Rack Loader unavailable. Close door.

The rack loader door was opened while the rack loader is busy. This is hazardous and not advised. Alternatively, the rack loader door sensor assembly may be malfunctioning.

§ Take care to not open rack loader door when red light is lit.
§ If the message persists, contact your Technical Support Provider.

896-897

Unexpected error. Contact Technical Service.

§ Contact your Technical Support Provider.

898

Rack Loader device jammed while homing. Returning to Pause Mode. Check Rack Loader area.

The Rack Gripper, Rack Transfer, or Rack Transfer Door jammed during the transition from Pause mode to Run.

§ Check Rack Loader area.
§ If the message persists, contact your Technical Support Provider.

899

Unexpected error. Contact Technical Service.

§ Contact your Technical Support Provider.

901

Automation Rack cannot be ejected.

The instrument is not in integrated mode, detects a tube in the auto rack, operator attempts to eject it.

§ Check Rack Loader area.
§ If the message persists, contact your Technical Support Provider.

902

Main cover is open.

The Main Cover door is opened during Initialization. May also occur if the sensor fails or becomes disconnected. This error is reported one time if the door is open.

§ Close the door to continue.
§ If the message persists, contact your Technical Support Provider.

903

Sample pipettor door is open.

The sample pipettor door is open during initialization. May also occur if the sensor fails or becomes disconnected.

§ Close the door to continue.
§ If the message persists, contact your Technical Support Provider.

904

Main cover is open. AutoStart will not be performed.

The Main Cover was open when AutoStart began. May also occur if the sensor fails or becomes disconnected.

§ Close the door and re-run the operation.
§ If the message persists, contact your Technical Support Provider.

905

Sample pipettor door is open. AutoStart will not be performed.

The sample pipettor door was open when AutoStart began. May also occur if the sensor fails or becomes disconnected.

§ Close the door and re-run the operation.
§ If the message persists, contact your Technical Support Provider.

906

Sample rack loader door is open. AutoStart will not be performed.

The Rack Loader External Door was open when AutoStart began. May also occur if the sensor fails or becomes disconnected.

§ Close the door and re-run the operation.
§ If the message persists, contact your Technical Support Provider.

907

Main cover is open. Automatic Substrate Dispense will not be performed.

The Main Cover was open when automatic substrate dispense began. May also occur if the sensor fails or becomes disconnected.

§ Close the cover and re-run the operation.
§ If the message persists, contact your Technical Support Provider.

908

Sample pipettor door is open. Automatic Substrate Dispense will not be performed.

The sample pipettor door was open when Auto substrate dispense began. May also occur if the sensor fails or becomes disconnected.

§ Close the door and re-run the operation.
§ If the message persists, contact your Technical Support Provider.

909

Sample rack loader door is open. Automatic Substrate Dispense will not be performed.

The Rack Loader External Door was open when Auto substrate dispense began. May also occur if the sensor fails or becomes disconnected.

§ Close the door and re-run the operation.
§ If the message persists, contact your Technical Support Provider.

910

Main cover is open. AutoStart is running. Close cover.

The Main Cover was open while AutoStart operation was active. May also occur if the sensor fails or becomes disconnected.

§ Close the door.
§ If the message persists, contact your Technical Support Provider.

911

Sample pipettor door is open. AutoStart is running. Close door.

Sample pipettor (Top) Door (aka Clot Door) was open while AutoStart operation was active. May also occur if the sensor fails or becomes disconnected.

§ Close the door.
§ If the message persists, contact your Technical Support Provider.

912

Unexpected error. Contact Technical Service.

§ Contact your Technical Support Provider.

913

Main cover is open. Automatic Substrate Dispense is running. Close cover.

The Main Cover was open while Automatic substrate dispense operation was active. May also occur if the sensor fails or becomes disconnected.

§ Close the door.
§ If the message persists, contact your Technical Support Provider.

914

Sample pipettor door is open. Automatic Substrate Dispense is running. Close door.

The sample pipettor (Top) Door (aka Clot Door) was open while Automatic substrate dispense was active. May also occur if the sensor fails or becomes disconnected.

§ Close the door.
§ If the message persists, contact your Technical Support Provider.

917

Empty unbarcoded rack detected. Rack will be ejected.

A rack that has no detectable tubes on it, and no rack barcode (or an unreadable barcode) has been detected on the system. Because the instrument suspects the rack was loaded but cannot be seen, it will be ejected.

§ If the message persists, contact your Technical Support Provider.

918

Rack transfer has jammed during retract. Remove rack if present and retry.

A retract motion jammed or failed. Some Causes may be an obstruction restricting motion, improper configuration, failure due to a electrical issue, etc.

§ Remove rack if present and retry.

919

A sample rack changed status unexpectedly. Sample carousel must be rescanned. Retry the operation to rescan the carousel.

A rack either disappeared or appeared since the last scan when the rack has never been accessed via the rack loader or the main cover is open. The system enters pause mode.

§ Select **RUN**.

§ If the message persists, contact your Technical Support Provider.

920

Sample rack status cleared. After closing main cover, press Run prior to resuming use of Rack Loader.

Opening the main cover (on XPi systems) causes the instrument to consider all sample carousel positions as unknown because the operator may now insert/ remove racks directly from the sample carousel without the instrument's knowledge.

921

Aborting transition to Run Mode due to errors. Returning to Stop Mode.

An error (specified via a different error code) has caused the control side software to abort the transition to run mode from stop mode. The instrument is returning to pause mode.

§ Resolve the accompanying errors.

922

Aborting transition to Run Mode due to errors. Returning to Pause Mode.

An error (specified via a different error code) has caused the control side software to abort the transition to run mode from pause mode. The instrument is returning to pause mode.

§ Resolve the accompanying errors. If this problem persists, contact your Technical Support Provider.

923

The Results Buffer has overflowed. Test Rerun.

The results Buffer has overflowed. This error could be caused by the user side software shut down, but the control side software continued to process tests. In these cases, the error will be seen when the user side software is restarted. This error could also be caused by repeated problems with LIS connections

§ No action required. The test will rerun.
§ Ensure that LIS, if in use, is communicating properly.
§ If this problem persists, contact your Technical Support Provider.

1002

Bead Dispenser fatal timeout.

Bead Dispenser has failed to respond to a command in the allowable time. Instrument shut down. All tests on board are lost.

§ Contact your Technical Support Provider.

1003

Test designated bad – Pretreatment transfer scheduling issue – Test Rerun.

Unable to transfer pre-treatment tube. Test will be reordered.

§ No action required. If this problem persists, contact your Technical Support Provider.

1006

Please clear the $IM2K$ of automation tubes.

When VersaCell messages to the IMMULITE serious enough error with the pick or place of a Sample Tube that the operator needs to clear the error.

§ Open the top cover and remove the sample tubes from the automation rack on the Sample Carousel.
§ Select the **RUN** button. If sample tubes were not run, place them on the VersaCell and rerun them.

1007

Please clear the $IM2K$ of automation tubes. Going into sample pause.

SCAS Error - Tube On board

§ Open the top cover and remove the sample tubes from the automation rack on the Sample Carousel.
§ Select **RUN**. If sample tubes were not run, place them on the VersaCell and rerun them.

1008

Please clear the $IM2K$ of automation tubes. Going into sample pause.

Three tubes on AR

§ Open the top cover and remove the sample tubes from the automation rack on the Sample Carousel.
§ Select **RUN**. If sample tubes were not run, place them on the VersaCell and rerun them.

1009

Please clear the $IM2K$ of automation tubes. Going into sample pause.

Auto A - DPR Mismatch #1

§ Open the top cover and remove the sample tubes from the automation rack on the Sample Carousel.
§ Select **RUN**. If sample tubes were not run, place them on the VersaCell and rerun them.

1010

Please clear the $IM2K$ of automation tubes. Going into sample pause.

Auto B - DPR Mismatch #1

§ Open the top cover and remove the sample tubes from the automation rack on the Sample Carousel.
§ Select **RUN**. If sample tubes were not run, place them on the VersaCell and rerun them.

1011

Please clear the $IM2K$ of automation tubes. Going into sample pause.

Auto C - DPR Mismatch #1

§ Open the top cover and remove the sample tubes from the automation rack on the Sample Carousel.
§ Select **RUN**. If sample tubes were not run, place them on the VersaCell and rerun them.

1012

The Incubator 1-Processor Shuttle Mutex has timed out.

The Incubator 1-Processor Shuttle Mutex has timed out. The Incubator chain 1will shutdown.

§ Contact your Technical Support Provider.

1013

The Incubator 1-Belt Transfer Mutex has timed out.

The Incubator 1-Belt Transfer Mutex has timed out. The Front End will shutdown.

§ Contact your Technical Support Provider.

1019

The Luminometer Disk- Luminometer Mutex has timed out.

The Luminometer Disk- Luminometer Mutex has timed out. The Front End will shutdown.

§ Contact your Technical Support Provider.

1023

The minimum time for a wait exceeds limits.

The minimum time for a wait exceeds limits. The Front End will shutdown.

§ Contact your Technical Support Provider.

1024

The maximum time for a wait exceeds limits.

The maximum time for a wait exceeds limits. The Front End will shutdown.

§ Contact your Technical Support Provider.

1025

Event 1 has fatally timed out.

An earlier error has caused a timeout in a portion of the Instrument. This portion will be shutdown.

§ Allow the Instrument to complete tests in progress.
§ Contact your Technical Support Provider.

1026

Event 2 has fatally timed out.

An earlier error has caused a timeout in a portion of the instrument. This portion will be shutdown.

§ Allow the Instrument to complete tests in progress.
§ Contact your Technical Support Provider.

1027

Event 3 has fatally timed out.

An earlier error has caused a timeout in a portion of the instrument. This portion will be shutdown.

§ Allow the Instrument to complete tests in progress.
§ Contact your Technical Support Provider.

1031

Luminometer Belt calculated an excessive time for a move.

Unexpected error. An internal timing error for the Luminometer Belt has caused the Instrument to shut down. All tests on board are lost.

§ Contact your Technical Support Provider.

1032

Luminometer Belt calculated an excessive distance for a move.

Unexpected error. An internal timing error for the Luminometer Belt has caused the Instrument to shut down. All tests on board are lost.

§ Contact your Technical Support Provider.

1033

Incubator 1 Belt calculated an excessive time for a move.

Unexpected error. An internal timing error for Incubator 1 has caused the Instrument to shut down. No new tests will be loaded.

§ Allow the Instrument to complete tests in progress.
§ Contact your Technical Support Provider.

1034

Incubator 1 Belt calculated an excessive distance for a move.

Unexpected Error. An internal timing error for Incubator Belt 1 has caused Incubator 1 to shut down. No new tests will be loaded.

§ Allow the Instrument to complete tests in progress.
§ Contact your Technical Support Provider.

1039

Luminometer Belt movement timeout. Luminometer will shut down.

Unexpected Error. The Luminometer Belt has been asked to move for a longer time than permitted. The Instrument will shut down. All tests on board are lost.

§ Contact your Technical Support Provider.

1040

A single motor attempted two simultaneous motor moves.

Unexpected error. Sample Arm X motor attempted two simultaneous moves. Instrument will attempt to enter Sample Pause.

§ Allow the Instrument to complete tests in progress.
§ Contact your Technical Support Provider.

1041

A single motor attempted two simultaneous motor moves.

Unexpected error. Sample Arm Z motor attempted two simultaneous moves. Instrument will attempt to enter Sample Pause.

§ Allow Instrument to complete tests in progress.
§ Contact your Technical Support Provider.

1042

A single motor attempted two simultaneous motor moves.

Unexpected error. Sample Valve motor attempted two simultaneous moves. Instrument will attempt to enter Sample Pause.

§ Allow Instrument to complete tests in progress.
§ Contact your Technical Support Provider.

1043

A single motor attempted two simultaneous motor moves.

Unexpected error. Sample Dilutor motor attempted two simultaneous moves. Instrument will attempt to enter Sample Pause.

§ Allow Instrument to complete tests in progress.
§ Contact your Technical Support Provider.

1044

A single motor attempted two simultaneous motor moves.

Unexpected error. Sample Carousel motor attempted two simultaneous moves. Instrument will attempt to enter Sample Pause.

§ Allow Instrument to complete tests in progress.
§ Contact your Technical Support Provider.

1045

A single motor attempted two simultaneous motor moves.

Unexpected error. Reagent Arm Z motor attempted two simultaneous moves. Instrument will attempt to enter Reagent Pause.

§ Allow Instrument to complete tests in progress.
§ Contact your Technical Support Provider.

1046

A single motor attempted two simultaneous motor moves.

Unexpected error Reagent Arm X motor attempted two simultaneous moves. Instrument will attempt to enter Reagent Pause.

§ Allow the Instrument to complete tests in progress.
§ Contact your Technical Support Provider.

1047

A single motor attempted two simultaneous motor moves.

Unexpected error. Reagent Valve motor attempted two simultaneous moves. Instrument will attempt to enter Reagent Pause.

§ Allow Instrument to complete tests in progress.
§ Contact your Technical Support Provider.

1048

A single motor attempted two simultaneous motor moves.

Unexpected error. Reagent Dilutor motor attempted two simultaneous moves. Instrument will attempt to enter Reagent Pause.

§ Allow Instrument to complete tests in progress.
§ Contact your Technical Support Provider.

1049

A single motor attempted two simultaneous motor moves.

Unexpected error. Reagent Carousel or Pack Lid Opener motor attempted two simultaneous moves. Instrument will attempt to enter Reagent Pause.

§ Allow Instrument to complete tests in progress.
§ Contact your Technical Support Provider.

1050

A single motor attempted two simultaneous motor moves.

Unexpected error. Bead Carousel or Bead Dispenser motor attempted two simultaneous moves. Instrument will attempt to enter Bead Pause.

§ Allow Instrument to complete tests in progress.
§ Contact your Technical Support Provider.

1051

A single motor attempted two simultaneous motor moves.

Unexpected error. Tube Indexer motor attempted two simultaneous moves. Instrument will attempt to enter Bead Pause.

§ Allow Instrument to complete tests in progress.
§ Contact your Technical Support Provider.

1052

A single motor attempted two simultaneous motor moves.

Unexpected error. Tube Transport motor attempted two simultaneous moves. Instrument will attempt to enter Bead Pause.

§ Allow Instrument to complete tests in progress.
§ Contact your Technical Support Provider.

1055

A single motor attempted two simultaneous motor moves.

Unexpected error. Luminometer Belt motor attempted two simultaneous moves. Instrument will attempt to shut down.

§ Allow Instrument to complete tests in progress.
§ Contact your Technical Support Provider.

1058

A single motor attempted two simultaneous motor moves.

Unexpected error. Luminometer Disk/Luminometer Shuttle motor attempted two simultaneous moves. Instrument will attempt to shut down.

§ Allow Instrument to complete tests in progress.
§ Contact your Technical Support Provider.

1059

A single motor attempted two simultaneous motor moves.

Unexpected error. Attenuator motor attempted two simultaneous moves. Instrument will attempt to shut down.

§ Allow Instrument to complete tests in progress.
§ Contact your Technical Support Provider.

1060

A single motor attempted two simultaneous motor moves.

Unexpected error. Inlet Shuttle motor attempted two simultaneous moves. Instrument will attempt to shut down.

§ Allow Instrument to complete tests in progress.
§ Contact your Technical Support Provider.

1061

A single motor attempted two simultaneous motor moves.

Unexpected error. Belt Shuttle motor attempted two simultaneous moves. Instrument will attempt to shut down.

§ Allow Instrument to complete tests in progress.
§ Contact your Technical Support Provider.

1064

A single motor attempted two simultaneous motor moves.

Unexpected error. Exit Shuttle motor attempted two simultaneous moves. Instrument will attempt to shut down.

§ Allow Instrument to complete tests in progress.
§ Contact your Technical Support Provider.

1065

There is a duplicate entry on the Loader queue.

There is a duplicate entry on the Loader queue. The duplicate is removed from the Loader queue.

1066

There is a duplicate entry on the Stat queue.

There is a duplicate entry on the Stat queue. The duplicate is removed from the Stat queue.

1067

Attention!! - substrate probe is not fully seated.

The substrate probe is not fully seated. The test is marked bad and reordered.

1068

Marked bad and rerunning test - substrate probe not fully seated.

The substrate probe is not fully seated. The test is marked bad and reordered.

1069

Substrate probe not fully seated.

Substrate probe is not fully seated.

§ Ensure that the Substrate probe is in place and fully seated.
§ If the message persists, contact your Technical Support Provider.

1071

Test Designated bad - a move to the blind hole timed out - Test Rerun

While cleaning the Dilution well theSample Arm does not move to the blind hole within the alloted time.

§ If the message persists, contact your Technical Support Provider.

1072

Test Designated bad - a dilution well spin timed out- Test Rerun

The Dilution well timed out while trying to clean the Dilution Well.

§ If the message persists, contact your Technical Support Provider.

1073

Test Designated bad - the inter-cycle sample movements timed out - Rerun Test

The Sample Diluter did not finish the move within a certain amount of time.

§ If the message persists, contact your Technical Support Provider.

1074

Test Designated bad - the inter-cycle reagent movements timed out - Rerun Test

The Reagent Diluter did not finish the move within a certain amount of time.

§ If the message persists, contact your Technical Support Provider.

1077

Pretreatment aborted due to pause mode or error condition.

A pretreatment tube was marked bad because the Instrument is in Pause Mode due to a prior error condition.

§ Test will be re-run.

§ If the message persists, contact your Technical Support Provider.

1078

Dilution aborted due to pause mode or error condition.

The first dilution replicate was marked bad because the Instrument is in Pause Mode due to a prior error condition.

§ Test will be re-run.

§ If the message persists, contact your Technical Support Provider.

1088

SampleZ move to fixed position has failed. Test marked bad and reordered.

The Sample Pipettor could not aspirate a pretreatment test.

§ Test will be rerun. If error continues, contact your Technical Support Provider.

1089

Test reordered due to computation error. Please call Technical Service.

The Unique test ID for the test that is going to get a reagent pipette action in the current cycle does not match the ID at the corresponding location on the Incubator Chain.

§ Contact your Technical Support Provider.

1090

Test reordered due to computation error. Please call Technical Service.

The Unique test ID for the test that is going to get a sample pipette action in the current cycle does not match the ID at the corresponding location on the Incubator Chain.

§ Contact your Technical Support Provider.

1091

Test reordered due to computation error. Please call Technical Service.

The Unique test ID for the test that is telling the Sample Carousel where to rotate for the test to be pipetted in the next cycle does not match the ID at the corresponding location on the Incubator Chain.

§ Contact your Technical Support Provider.

1092

Test reordered due to computation error. Please call Technical Service.

The Unique test ID for the test that is telling the Reagent Carousel where to rotate for the test to be pipetted on Incubator Chain 1 in the next cycle does not match the ID at the corresponding location on the Incubator Chain.

§ Contact your Technical Support Provider.

1094

Test reordered due to computation error. Please call Technical Service.

The Unique test ID for the test that is being loaded into the Incubator in the current cycle does not match the ID at the corresponding location on the (logical) Incubator Chain.

§ Contact your Technical Support Provider.

1095

Test reordered due to computation error. Please call Technical Service.

The Unique test ID for the test that is being loaded into the Incubator in the next cycle does not match the ID at the corresponding location on the (logical) Incubator Chain

§ Contact your Technical Support Provider.

1096

Test reordered due to computation error. Please call Technical Service.

The Unique test ID for the test that is being reagent-only pipetted in the current cycle does not match the ID at the corresponding location on the Incubator Chain.

§ Contact your Technical Support Provider.

1097

Test reordered due to computation error. Please call Technical Service.

The Unique test ID for the test that is being reagent-only pipetted in the next cycle does not match the Id at the corresponding location on the Incubator Chain.

§ Contact your Technical Support Provider.

1104

Test reordered due to computation error. Please call Technical Service.

Self-detected software error. The array reference fell outside bounds.

§ Contact your Technical Support Provider.

1105

Test reordered due to computation error. Please call Technical Service.

There was a data error when setting the flag indicating that test data has moved in conjunction with a physical shuttle transfer (within an 18-sec. cycle, as expected). The error may be that the transfer took place, but was not expected.

§ Contact your Technical Support Provider.

1106

Sample Pipettor Z jam inside Incubator.

The Sample arm jammed while moving in the Z-Axis direction inside the incubator/ reagent space when recovering from a jam.

§ Select **STOP**.
§ Check that the Sample Pipettor is not blocked.
§ If the message persists, contact your Technical Support Provider.

1107

Sample Pipettor X jam. Entering Pause mode. Press Run to continue.

Sample Pipettor X jam. Entering Pause mode.

§ Select **RUN** to continue.
§ If the message persists, contact your Technical Support Provider.

1108

Reagent Pipettor Z jam inside Incubator.

The Reagent arm jammed while moving in the Z-Axis direction inside the incubator/reagent space when recovering from a jam.

§ Select **STOP**.
§ Check that the Sample Pipettor is not blocked.
§ If the message persists, contact your Technical Support Provider.

1109

Reagent Pipettor X jam. Entering Pause mode. Press Run to continue.

Reagent Pipettor X jam. Entering Pause mode.

§ Select **RUN** to continue.
§ If the message persists, contact your Technical Support Provider.

1110

Unable to open the file ErrLimit.iml. Defaults will be used.

Any failure to open the file will cause an error.

§ Contact your Technical Support Provider.

1185

Incubator Belt Transfer jammed during recovery.

The Belt Transfer jammed while attempting to recover from a jam. No new tests will be loaded. Instrument will attempt to complete tests in Luminometer.

§ Allow Instrument to complete tests in progress.
§ Contact your Technical Support Provider.

1186

Incubator Belt Transfer fatal timeout.

The Belt Transfer did not respond to a move command in the allowable time.

§ Contact your Technical Support Provider.

1187

Incubator Belt Transfer exceeded maximum steps.

Unexpected Error. Belt Transfer has been asked to move more than the allowable number of steps.

§ Contact your Technical Support Provider.

1244

Luminometer Disk jammed during recovery.

The Luminometer Disk has jammed. Instrument Shutdown. All tests on board lost.

§ Contact your Technical Support Provider.

1246

PMT Transfer jammed during recovery.

The PMT Transfer has jammed. Instrument shutdown. All tests on board lost.

§ Contact your Technical Support Provider.

1248

PMT Transfer fatal timeout.

The PMT transfer did not respond to a command in the allowable time. Instrument shutdown. All tests on board are lost.

§ Contact your Technical Support Provider.

1249

PMT Transfer exceeded maximum steps.

Unexpected Error. PMT Transfer has been asked to move more than the allowable number of steps.

§ Contact your Technical Support Provider.

1250

PMT Transfer home not found.

The PMT Transfer has jammed looking for Home.

§ Contact your Technical Support Provider.

1266

Luminometer Disk initialization step jammed during recovery.

The Luminometer Disk has jammed. Instrument shutdown. All tests on board lost.

§ Contact your Technical Support Provider.

1267

Luminometer Disk initialization step fatal timeout.

Luminometer Disk has not responded in the allowable time. Instrument shutdown. All tests on board are lost.

§ Contact your Technical Support Provider.

1270

Luminometer Belt timed out at Luminometer Disk.

The Luminometer Disk was waiting for the Luminometer Chain and was unable to move in the allowable time. Instrument shutdown. All tests on board are lost.

§ Contact your Technical Support Provider.

1272

Time in the Luminometer out of range.

Tests in the Luminometer exceeded allowable time. Tests will be marked bad and reordered.

§ Contact your Technical Support Provider.

1273

Luminometer Disk timed out at Luminometer Belt.

The Luminometer Chain was waiting for the Luminometer Disk and was unable to move in the allowable time. Instrument shutdown. All tests on board are lost.

§ Contact your Technical Support Provider.

1330

Attenuator Disk home fatal timeout.

Attenuator Disk has not responded in the allowable time. The Instrument will not run until the condition is corrected.

§ Contact your Technical Support Provider.

1331

Control side computation error – Call Technical Service.

Unexpected Error – the Instrument has shut down.

§ Contact your Technical Support Provider.

1332

Luminometer Disk fatal timeout.

Luminometer Disk has not responded in the allowable time. Instrument shutdown.

§ Contact your Technical Support Provider.

1333

Luminometer Disk exceeded maximum steps.

Luminometer Disk has been asked to move more than the allowable number of steps. Instrument shutdown. All tests on board are lost.

§ Contact your Technical Support Provider.

1334

Luminometer Disk home not found.

Luminometer Disk has jammed looking for Home. Instrument will not run until this condition is corrected.

§ Contact your Technical Support Provider.

1335

Exit Transfer home not found.

Exit Transfer has jammed looking for home. Instrument will not run until this condition is corrected.

§ Contact your Technical Support Provider

1338

Exit Transfer jammed during recovery.

The Exit Transfer has jammed while trying to recover from a jam. If running, the Instrument will immediately enter STOP mode. The Instrument cannot run until the jam is corrected.

§ Contact your Technical Support Provider.

1339

Exit Transfer fatal timeout.

The Exit Transfer has not responded in the allowable time. Instrument shutdown. All tests on board are lost.

§ Contact your Technical Support Provider.

1340

Exit Transfer exceeded maximum steps.

The Exit Transfer has been asked to move more than the allowable number of steps. Instrument will not run until this condition is corrected.

§ Contact your Technical Support Provider.

1342

Exit Transfer Home jammed during recovery.

The Exit Transfer has jammed looking for Home. The Instrument will not run until this condition is corrected.

§ Contact your Technical Support Provider.

1343

Exit Transfer fatal timeout.

The Exit Transfer failed to find its home sensor.

§ Contact your Technical Support Provider.

1361

TIMECYCL.IML is corrupt. Exiting MCP.

The file TIMECYCL.IML was unable to be opened.

§ Contact your Technical Support Provider.

1366

TimeCycl.iml is missing or has an incorrect format.

The TimeCycl.iml file is missing or corrupt.

§ Contact your Technical Support Provider.

1377

Empty all tubes has failed to complete. Entering Stop Mode.

The Instrument has failed to empty all tubes in the allowable time. The Instrument will not run until this condition is corrected.

§ Attempt to enter Run mode again. If this message persists, contact your Technical Support Provider.

1380

Programmer Error: HmiAlignIncChain2To Wash was passed invalid parameter value.

An unexpected error has occurred in the software. Do not attempt to run.

§ Contact your Technical Support Provider.

1401

Test designated bad – Allergen not found – Test rerun.

Allergen necessary for ordered test was not found. Test was marked bad and reordered.

§ Verify the correct allergen is on board, and rescan the wedge, or replace the allergen, as necessary.

1497

Requested belt move exceeds limits.

Unexpected Error. Requested belt move exceeds limits.

§ Allow Instrument to complete tests in progress.
§ Contact your Technical Support Provider.

1879

Config.iml file is missing.

The config.iml file is missing, or invalid values are in config.iml. This file holds value for diagnostic configurations.

§ Contact your Technical Support Provider.

1880

Incubator Belt Transfer cannot find home.

The Belt Transfer could not find its home sensor. This could indicate a bad motor, bad home sensor, or bad board (6).

§ Contact your Technical Support Provider.

1905

Assay time exceeds scheduler limit.

The assay requires more time than the resource allocator will permit. The scanned kit barcode may contain invalid information.

§ Allow instrument to complete tests in progress.
§ Contact your Technical Support Provider.

1906

Assay cycles exceeds scheduler limit.

The assay requires more time than the resource allocator will permit. The scanned kit barcode may contain invalid information.

§ Allow instrument to complete tests in progress.
§ Contact your Technical Support Provider.

1908

No data available for next reagent dispense.

A reagent dispense has been scheduled, but no data was found for the carousel or arm to act upon.

§ Contact your Technical Support Provider.

1909

No data available for next sample pipette.

A sample action has been scheduled, but no data was found for the carousel or arm to act upon.

§ Contact your Technical Support Provider.

1931

Incubator Belt Transfer home jammed during recovery.

The Belt Transfer jammed while attempting to recover from a jam during a home. This may indicate a bad home sensor, motor, encoder, or board (6).

§ Contact your Technical Support Provider.

1932

Incubator Belt Transfer home fatal timeout.

The Belt Transfer has failed to respond to a home command within 18 seconds. This may indicate a bad backplane or board (6).

§ Contact your Technical Support Provider.

1934

Tube designated bad – Incorrect substrate dispense – Test Rerun.

Incorrect substrate dispense during run caused a tube re-order.

§ While in Stop mode, examine the end of the substrate probe, and attempt to clean any substrate deposits.
§ If this error occurs after cleaning the probe, contact your Technical Support Provider.

1935

Incorrect substrate dispense during priming.

The substrate pump did not dispense the correct amount of fluid. This may be due to a defect in the substrate probe, calcification of substrate at the end of the probe, or a bad Substrate Linear Actuator pump.

§ While in Stop mode, examine the end of the substrate probe, and attempt to clean any substrate deposits.
§ If this error occurs after cleaning the probe, contact your Technical Support Provider.

1936

Substrate Pump has failed. Only tests in the Luminometer will complete.

The substrate pump did not dispense the correct amount of fluid enough times that we will enter a front-end shutdown.

§ Allow the Instrument to complete tests in progress.
§ Contact your Technical Support Provider.

1938

Attenuator Disk home not found.

The attenuator disk did not find its home. This may be due to a bad home sensor, motor, or board (3).

§ Contact your Technical Support Provider.

1940

Rerun test designated bad by reagent pipetting error.

Reagent arm failed to level sense. This may indicate a reagent pack that was not properly seated, a reagent pack lid that will not open easily, a bad level sensor, on an incorrect configuration of the Reagent Arm.

§ While in Reagent Pause mode, check if the reagent marked bad is seated correctly, and verify if the lid allows access to the reagent by lightly pushing it.
§ If the error still occurs once the wedge is checked, contact your Technical Support Provider.

1941

Scheduler Error

The scheduler was unable to complete a test in progress due to a resource conflict.

§ Allow the Instrument to complete tests in progress.
§ Contact your Technical Support Provider.

1942

Scheduler Error

The scheduler was unable to complete a test in progress due to a resource conflict.

§ Allow the Instrument to complete tests in progress.
§ Contact your Technical Support Provider.

1943

Sample data missing for a sample dilution or dispense.

A sample dilution or dispense was ordered without the sample data. This defect is due to a bad barcode or a software defect.

§ Attempt to re-scan the kit.
§ If this message persists, contact your Technical Support Provider.

1944

Scheduler Error.

There were 2 tests in a row that need a dilution at the beginning of the test .

§ Test will be reordered.

1945

Incubator Belt Transfer home sensor stuck on.

The home sensor was found for the belt transfer where it wasn't expected. This could be a home sensor defect, a motor defect, or a board defect (6).

§ Contact your Technical Support Provider.

1948

Luminometer Belt movement timeout. Luminometer will shut down.

Luminometer will shut down, since it took too long to move. This could be due to a bad TimeCycl.iml, or a motor or board (3) problem.

§ Allow the Instrument to finish tests in progress.
§ Contact your Technical Support Provider.

1950

Pack Lid Opener jammed during recovery

Reagent Opener open jammed during recovery. This could be due to a jammed reagent cover, a misconfigured pack lid opener, a bad sensor, motor, or board (1).

§ The Instrument will attempt to clear the error and continue with the next test.
§ If unable to clear the error, the Instrument will enter Reagent Pause.
§ Contact your Technical Support Provider.

1951

Pack Lid Opener fatal timeout.

Reagent Opener open fatal timeout. This may be due to a problem with a backplane or the board (1).

§ Contact your Technical Support Provider.

1952

Pack Lid Opener exceeded maximum steps.

Reagent Opener open did not find the sensor within the step parameters given to it via diagnostics' position.iml. This could be due to a bad sensor, configuration or board (1).

§ Contact your Technical Support Provider.

1954

Pack Lid Opener home fatal timeout

Reagent Opener home attempting recovery after jam. This could be due to a misconfigured Reagent Opener or Reagent Carousel, or a pack that is not properly seated, or that has a stuck lid.

§ Contact your Technical Support Provider.

1958-1963

Scheduler Error

The scheduler was unable to complete a test in progress due to a resource conflict.

§ Allow the Instrument to complete tests in progress.
§ Contact your Technical Support Provider.

1965

There are too many immortal threads.

Unexpected software error.

§ Place the Instrument in Pause mode to prevent new tests from loading.
§ Contact your Technical Support Provider.

1991

Scheduler Error. Please contact Technical Service.

This indicates a data error.

§ Contact your Technical Support Provider.

10903

A serious error has occurred with the hepatitis confirmatory test feature. Communications to the LIS has been paused. Please do not reactivate LIS communication and contact Technical Service.

Database error occurred while sending a report to LIS.

§ Do not reactivate LIS communication.
§ Contact your Technical Support Provider.

11503

8 adjustors are needed. Less than 8 adjustors have been ordered

One or more of the eight adjustors was deleted or the Instrument was unable to pipette all eight adjustor samples. Adjustment cannot be calculated.

§ Check error log for associated errors that need to be resolved.
§ If the message persists, contact your Technical Support Provider.

11509

Incorrect Kit Parameters

Scanned kit parameters are incorrect.

§ Re-scan the kit.

11510

Division by zero while transforming dose to golden counts

Division by zero.

§ Contact your Technical Support Provider.

11511

CV of Low adjustors not within limit

Precision of the low adjustor is greater than 10 or 15 %.

§ Check associated error messages to determine cause.
§ Ensure sufficient volume of adjustor.

11512

Log(0) or Log(-x) are illegal - Adjustor concentration error

Adjustment concentration error.

§ Contact your Technical Support Provider.

11513

CV of High adjustors not within limit

Precision of the high adjustor is greater than 15%.

§ Check associated error messages to determine cause.
§ Ensure sufficient volume of adjustor.

11515

CV of both High and Low adjustors not within limit

Precision of the low and high adjustors are greater than 10 or 15 %.

§ Check associated error messages to determine cause.
§ Ensure sufficient volume of adjustor.

11516

Mean of Low adjustors = 0

Malfunctioning PMT

§ Contact your Technical Support Provider.

11517

Mean of High adjustors = 0

Malfunctioning PMT

§ Contact your Technical Support Provider.

11701

No Unique Record ID passed to update in worklist object. Contact Technical Service

While working in the Worklist screen the operator tried to order a test for which a unique record ID was not generated by the system.

§ Contact your Technical Support Provider.

11702

There is no accession number passed to the worklist object. Contact Technical Service.

While working in the Worklist screen the operator tried to order a test for which no accession number had been assigned by the system.

§ Contact your Technical Support Provider.

11703

Attempted to save a record in the worklist but the test is not in the data base

Attempted to save an imported record from a worklist file or the LIS to the Worklist but the test is not in the data base.

§ Ensure the kits are in the database.
§ If the message persists, contact your Technical Support Provider.

11704

This adjustor is already in progress. You need to wait until it is completed to order another one.

The operator attempted to order a second adjustment for the same kit and lot before one ordered had been completed.

§ Wait for initial adjustment to be completed.
§ Check the error log for kit errors that need to be resolved.
§ If the message persists, contact your Technical Support Provider.

11705

This control information does not match what is currently on the system. Record cannot be added at this time. Check your information and try again.

This control information does not match what is currently on the system. Record cannot be processed.

§ Verify that control information, such as lot number and expiration date, is entered correctly.
§ If the message persists, contact your Technical Support Provider.

11706

Invalid accession number.

The ~Probe Clean accession number got passed to the IMMULITE from the LIS or from an imported worklist with an order for a patient test.

11800

Cannot open the DPR path. Startup aborted

Communication between the User and Control sides cannot be opened.

§ Contact your Technical Support Provider.

11801

Semaphore failure. Startup Aborted.

Semaphore failure. Startup Aborted.

§ Contact your Technical Support Provider.

11802

DPR WRITE failure. Startup Aborted.

A failure of communication between the User and Control sides because of a DPR WRITE failure was detected. Startup Aborted.

§ Contact your Technical Support Provider.

11803

DPR READ failure. Startup Aborted.

A failure of communication between the User and Control sides because of a DPR READ failure was detected. Startup Aborted.

§ Contact your Technical Support Provider.

11804

Communication could not be established with instrument.

Communication between the User and Control sides cannot be established.

§ Contact your Technical Support Provider.

11805

The instrument is in Panic Mode. Hit Run to try to run again or log off.

The instrument is in Stop Mode due to a mechanical jam or similar error.

§ Check associated error message to determine cause.
§ If the message persists, contact your Technical Support Provider.

11806

No Value for Head Pointer

Problem was encountered when reading the head pointer from a queue.

§ Contact your Technical Support Provider.

11807

No Value for Tail Pointer

Problem was encountered when reading the tail pointer from a queue.

§ Contact your Technical Support Provider.

11808

Problem Incrementing Pointer

Problem was encountered when a pointer from a queue was incremented.

§ Contact your Technical Support Provider.

11809

Error while getting instrument status in initialization

Error while getting instrument status in initialization.

§ Contact your Technical Support Provider.

12000

Control Computer did not shut down properly

MCP was not properly exited when trying to go into Stop or when Logging off. Control side is in host mode.

§ Contact your Technical Support Provider.

12001

Kit Not Adjusted

For some reason the adjustment was not completed.

§ Run the kit adjustment.
§ Check the error log for other issues that need to be addressed.
§ If the message persists, contact your Technical Support Provider.

12002

Unrecognized Reagent on board for test. Cannot run test.

The kit information has not yet been entered into the database.

§ Scan and adjust the kit and then attempt to run the test again.
§ If the message persists, contact your Technical Support Provider.

12003

No reagent on board to run test.

The software does not register the reagent barcode as being present on the reagent carousel.

§ Verify that sufficient and correct reagents are on board.
§ Verify kit is scanned into database.
§ Inspect reagent barcode label for damage.
§ Ensure Wedge is seated correctly.
§ If the message persists, contact your Technical Support Provider.

12004

Not enough reagent to run test.

The indication in the software is that the amount of reagent remaining in Wedge is insufficient to run tests.

§ Verify that sufficient and correct reagents are on board.
§ If the message persists, contact your Technical Support Provider.

12005

Unrecognized bead on board for test. Cannot run test.

The kit information has not yet been entered into the database.

§ Verify beads are on board.
§ Verify kit is scanned into database.
§ Ensure Bead Pack is seated correctly.
§ If the message persists, contact your Technical Support Provider.

12006

No beads on board to run test.

The software does not register the bead barcode as being present on the bead carousel.

§ Verify that sufficient and correct beads are on board.
§ Verify kit is scanned into database.
§ Inspect bead barcode label for damage.
§ Ensure Bead Pack is seated correctly.
§ If the message persists, contact your Technical Support Provider.

12007

Not enough beads to run test.

The indication in the software is that the amount of beads remaining in the pack is insufficient to run tests.

§ Verify that sufficient and correct beads are on board and add as necessary.
§ If the message persists, contact your Technical Support Provider.

12008

There is no diluent sample tube on board to run test.

The software does not register the diluent barcode as being present on the sample carousel.

§ Check the barcode is facing out.
§ Place sample diluent on board.
§ Check for the correct sample diluent.

12009

Problem Retrieving Tail Pointer from the Loader Q

Tail pointers are used to determine the number of tests in queue. When calculating time to result and when checking to see if loader or STAT queue is empty, the User side requests the Tail Pointer from the DPR. If the Tail Pointer is not obtained, this error is posted.

§ Contact your Technical Support Provider.

12010

Problem Retrieving Head Pointer from the Loader Q

Head pointers are used to determine the number of tests in queue. When calculating time to result and when checking to see if loader or STAT queue is empty, the User side requests the Head Pointer from the DPR. If the Head Pointer is not obtained, this error is posted.

§ Contact your Technical Support Provider.

12100

Trying to insert unknown result record from result buffer!

The test record has been deleted before the test resulted.

§ Confirm that a record was not deleted from the Worklist.
§ If the message persists, contact your Technical Support Provider.

12101

Print Report Function Error

General error indicating an error occurred when a report was being generated for the printout.

§ Check for ink in the ink cartridges.
§ Check for printer paper.
§ Ensure the printer power is on.
§ If the message persists, contact your Technical Support Provider.

12102

Error occurred inserting 0 into reserved space

Software communication error.

§ Contact your Technical Support Provider.

12103

Error occurred inserting record into STAT loader queue

Software communication error.

§ Contact your Technical Support Provider.

12104

STAT Loader queue Pointer not updated properly

An error occurred when attempting to increment the STAT loader queue pointer.

§ Contact your Technical Support Provider.

12105

Problem Retrieving Head Pointer from the Routine Q

During the function that checks to see if the Control side has updated the loader queue, a problem occurred in retrieving the Head pointer.

§ Contact your Technical Support Provider.

12106

Error occurred inserting record into Routine loader queue

An error occurred while inserting a record into the Routine loader queue.

§ Contact your Technical Support Provider.

12107

Routine Loader queue Pointer not updated properly

An error occurred when attempting to increment the Routine loader queue.

§ Contact your Technical Support Provider.

12108

Problem retrieving Result Buffer Head Pointer

During the function that checks to see if the Control side has updated the Result Buffer, a problem occurred in retrieving the Head pointer.

§ Contact your Technical Support Provider.

12109

Problem retrieving Result Buffer Tail Pointer

During the function that checks to see if the Control side has updated the Result Buffer, a problem occurred in retrieving the Tail pointer.

§ Contact your Technical Support Provider.

12110

Problem Retrieving Head Pointer from the Routine Q

During the function that checks for a free space in the routine loading queue to insert another record, an error was detected when retrieving the Head Pointer.

§ Contact your Technical Support Provider.

12111

Problem Retrieving Tail Pointer from the Routine Q

During the function that checks for a free space in the routine loading queue to insert another record, an error was detected when retrieving the Tail Pointer.

§ Contact your Technical Support Provider.

12112

Problem Retrieving Head Pointer from the STAT Q

During the function that checks for a free space in the STAT queue to insert another record, an error was detected when retrieving the Head Pointer.

§ Contact your Technical Support Provider.

12113

Problem Retrieving Tail Pointer from the STAT Q

During the function that checks for a free space in the STAT queue to insert another record, an error was detected when retrieving the Tail Pointer.

§ Contact your Technical Support Provider.

12114

Test in progress deleted during initialization.

If the worklist is deleted during initialization, this error indicates that deleted items were still in progress. This occurs only after the user-side computer was previously shut down (for example, run-time error or emergency shut down) while tests were still in progress.

§ Contact your Technical Support Provider.

12115

Instrument running with Clot Detection Deactivated.

Upon Initialization, the program has determined that Clot detection is turned off and warns the user that they may not want to operate the instrument in this mode.

§ Contact your Technical Support Provider.

12116

Unable to determine Clot Detection status.

Upon Initialization, the program tries to determine if the clot detection is on or off. If this error occurs, it is because of a DPRAM, semaphore issue or an inability of the Control side to read the Board.iml file.

§ Contact your Technical Support Provider.

12300

LIS- Carriage return or Line Feed missing from message.

Carriage return and/or Line Feed are required but missing from the message.

§ Contact your laboratory LIS provider.

§ If the message persists, contact your Technical Support Provider.

12301

LIS- Incorrect or Missing Frame Number.

The frame number for a message is not present or is an incorrect value.

§ Contact your laboratory LIS provider.
§ If the message persists, contact your Technical Support Provider.

12302

LIS- Incorrect Checksum.

The checksum, a scheme to indicate whether a message was received properly, is incorrect.

§ Contact your laboratory LIS provider.
§ If the message persists, contact your Technical Support Provider.

12303

LIS- Message is too short (< 5 characters).

LIS message received is less than the requisite five characters.

§ Contact your laboratory LIS provider.
§ If the message persists, contact your Technical Support Provider.

12304

LIS- Invalid Password in Header Message.

The Password received does not match the Password entered in the LIS configuration.

§ Contact your laboratory LIS provider.
§ If the message persists, contact your Technical Support Provider.

12305

LIS- Invalid Sender ID in Header Message.

The Sender ID received from the LIS does not match the Sender ID entered on the LIS configuration screen.

§ Contact your laboratory LIS provider.
§ If the message persists, contact your Technical Support Provider.

12306

LIS- Invalid Receiver ID in Header Message.

The Receiver ID received from the LIS does not match the Receiver ID entered on the LIS Configuration screen.

§ Contact your laboratory LIS provider.
§ If the message persists, contact your Technical Support Provider.

12307

LIS- No Header message received.

Records were received from the LIS without a header message.

§ Contact your laboratory LIS provider.
§ If the message persists, contact your Technical Support Provider.

12308

LIS- Several LIS errors have occurred the past hour. There may be a communication Problem.

Multiple communication errors occurred between the LIS and the IMMULITE 2000 within an hour.

§ Contact your laboratory LIS provider.
§ If the message persists, contact your Technical Support Provider.

12309

LIS- Null or Missing Patient ID in Patient Record.

The Patient ID field, a required field in the patient message, is not present.

§ Contact your laboratory LIS provider.
§ If the message persists, contact your Technical Support Provider.

12310

LIS- Invalid Test Code or Format in Order record.

The test code in an order message from the LIS does not match any of the test codes entered on the IMMULITE 2000.

§ Contact your Technical Support Provider.

12311

LIS- LIS cannot accept message after sending message 7 times.

The IMMULITE 2000 unsuccessfully attempted to send a message to the LIS seven times before communication was aborted.

§ Contact your laboratory LIS provider.
§ If the message persists, contact your Technical Support Provider.

12312

LIS- Time-out, 30 seconds expired and no data was received from LIS.

After the initial data was received from the LIS and a response was sent, additional data was not received within 30 seconds and communication was aborted.

§ Contact your laboratory LIS provider.
§ If the message persists, contact your Technical Support Provider.

12313

LIS- EOT received prematurely while receiving data.

An EOT was sent before the transmission was completed.

§ Contact your laboratory LIS provider.
§ If the message persists, contact your Technical Support Provider.

12314

LIS- An error occurred sending LIS query request. Host query aborted.

An unrecognized error occurred when sending a query to the LIS.

§ Contact your laboratory LIS provider.
§ If the message persists, contact your Technical Support Provider.

12315

LIS-Time-out, No response from LIS after waiting 15 seconds.

After data was sent from the IMMULITE 2000 to the LIS, there was no response and communication was aborted.

§ Contact your laboratory LIS provider.
§ If the message persists, contact your Technical Support Provider.

12316

LIS- <ENQ> Contention.

The LIS was attempting to communicate with the IMMULITE 2000 at the same time that the IMMULITE 2000 was attempting to communicate with the LIS.

§ Contact your laboratory LIS provider.
§ If the message persists, contact your Technical Support Provider.

12317

LIS- No accession number in order record.

An accession number was missing from an order message received from the LIS.

§ Contact your laboratory LIS provider.
§ If the message persists, contact your Technical Support Provider.

12318

LIS- The LIS encountered an error for a query.

The LIS informed the IMMULITE that the LIS encountered an error in a request for a patient record from a query message.

§ Contact your laboratory LIS provider.
§ If the message persists, contact your Technical Support Provider.

12319

LIS- The LIS has no information for a record when queried.

The IMMULITE 2000 requested information from the LIS regarding a particular sample that the LIS did not have.

§ Contact your laboratory LIS provider.
§ If the message persists, contact your Technical Support Provider.

12320

LIS- An invalid terminator code was received from the LIS.

An invalid or unsupported terminator code was received from the LIS.

§ Contact your laboratory LIS provider.
§ If the message persists, contact your Technical Support Provider.

12321

LIS- Unique ID does not match retrieved file. Please call Technical Service.

All records are stored on the IMMULITE 2000 with a unique number. A retrieved file was expected to have a particular number and was incorrect.

§ Contact your Technical Support Provider.

12322

LIS- Record could not be marked sent, record not found.

A sent record could not be found in the database to be sent to the LIS.

§ Contact your Technical Support Provider.

12323

LIS- Record could not be sent to LIS, record not found.

A tagged record could not be found in the data base to be sent to the LIS.

§ Contact your Technical Support Provider.

12324

LIS- There are no "TAGGED" records to sent to the LIS.

The operator pressed the Send or Re-Send button on the LIS screen and no records are tagged.

§ Contact your Technical Support Provider.

12325

LIS- You can only display 10,000 records at one time.

More than 10,000 records meet the search criteria, but the LIS screen cannot display more than 10,000.

§ Contact your Technical Support Provider.

12326

LIS- Received Order Record before Patient Record.

The patient message must precede the order message in the LIS message. The LIS has received the order message before receiving the patient message.

§ Contact your laboratory LIS provider.
§ If the message persists, contact your Technical Support Provider.

12327

LIS: Data is being received from the LIS or IMMULITE is already sending data to the LIS.

The LIS is currently receiving data or the IMMULITE is actively sending data to the LIS.

§ Contact your laboratory LIS provider.
§ If the message persists, contact your Technical Support Provider.

12328

LIS- LIS reports an error in query request.

There was an error in the query request as it was sent from the IMMULITE to the LIS.

§ Contact your laboratory LIS provider.
§ If the message persists, contact your Technical Support Provider.

12329

LIS- LIS reports no information for Accession Number in query request.

There was no information for an Accession number in a query.

§ Contact your laboratory LIS provider.
§ If the message persists, contact your Technical Support Provider.

12330

LIS- An error occurred sending LIS query request. Host query aborted.

An unrecognized error occurred when sending a query to the LIS.

§ Contact your laboratory LIS provider.
§ If the message persists, contact your Technical Support Provider.

12331

LIS- Parse error occurred when downloading in Control format.

The Control information was sent from the LIS in the wrong format.

§ Contact your laboratory LIS provider.
§ If the message persists, contact your Technical Support Provider.

12332

LIS- Parse error occurred when downloading in Adjustor format.

The Adjustor information was sent from the LIS in the wrong format.

§ Contact your laboratory LIS provider.
§ If the message persists, contact your Technical Support Provider.

12333

LIS- Control downloaded from LIS is new to the system.

The control requested in the download from LIS is new to the system.

§ Contact your Technical Support Provider.

12334

LIS- Parse error occurred when downloading in Verifier format.

The Calibration verifier information was sent from the LIS in the wrong format.

§ Contact your laboratory LIS provider.
§ If the message persists, contact your Technical Support Provider.

12335

LIS- Sort Error

An error was exhibited when trying to sort in the LIS.

§ Contact your Technical Support Provider.

12336

LIS- Mail Error

An application error generated when the mail procedure was running.

§ Contact your Technical Support Provider.

12337

LIS- Display Error

An application error generated when the display procedure was running.

§ Contact your Technical Support Provider.

12338

LIS- Record Count Error

An application error generated when the record count procedure was running.

§ Contact your Technical Support Provider.

12339

LIS- Send LIS Error

An application error generated when the mail procedure was running.

§ Contact your Technical Support Provider.

12340

LIS- Sort Error

An LIS Data Management Screen error occurred when sorting by accession number.

§ Contact your Technical Support Provider.

12341

LIS- Check Message Error

An error occurred in the Check Sum Message routine when building the message.

§ Contact your Technical Support Provider.

12342

LIS- Parse Error

A programmer error was generated during the parsing routine.

§ Contact your Technical Support Provider.

12343

LIS- Listen Error

A programmer error occurred when receiving information from the LIS.

§ Contact your Technical Support Provider.

12344

LIS- Check Error

A check sum error occurred within the LIS program.

§ Contact your Technical Support Provider.

12345

LIS - Received an LIS message while in Automation Mode

The LIS has received an LIS message while in Automation Mode.

§ If the message persists, contact your Technical Support Provider.

12346

LIS - Invalid message type received from VersaCell or LIS

The IMMULITE was parsing a message from the VersaCell or LIS and determined that the message was an invalid type.

§ If the message persists, contact your Technical Support Provider.

12400

Substrate Low.

The substrate load scale indicates that the volume of fluid remaining in the bottle is lower than the warning level as configured in the database.

§ Replenish the Substrate Bottle.
§ Check the position of the Substrate Bottle on the load scale.
§ If the message persists, contact your Technical Support Provider.
Note: The Instrument continues to process tubes through the Luminometer and flags all bad results. These tests must be repeated.

12401

Substrate Empty.

The substrate load scale indicates that the volume of fluid remaining in the bottle is lower than the low level as configured in the database.

§ Replenish the Substrate Bottle.
§ Check the position of the Substrate Bottle on the load scale.
§ If the message persists, contact your Technical Support Provider.
Note: The Instrument continues to process tubes. These tests must be repeated.

12402

Trigger A Low.

The Trigger A load scale indicates that the volume of fluid remaining in the bottle is lower than the warning level as configured in the database. The Trigger A load cell is not currently active.

§ Contact your Technical Support Provider.

12403

Trigger A Empty.

The Trigger A load scale indicates that the volume of fluid remaining in the bottle is lower than the low level as configured in the database. The Trigger A load cell is not currently active.

§ Contact your Technical Support Provider.

12404

Trigger B Low.

The Trigger B load scale indicates that the volume of fluid remaining in the bottle is lower than the warning level as configured in the database. The Trigger B load cell is not currently active.

§ Contact your Technical Support Provider.

12405

Trigger B Empty.

The Trigger B load scale indicates that the volume of fluid remaining in the bottle is lower than the low level as configured in the data base. The Trigger B load cell is not currently active.

§ Contact your Technical Support Provider.

12406

Probe Wash Low.

The Probe Wash load scale indicates that the volume of fluid remaining in the bottle is lower than the warning level as configured in the database.

§ Refill the Probe Wash Bottle.
§ Ensure Probe Wash bottle is level on the Load Scale.
§ Check to see if the tubing is tucked inside the Instrument and does not interfere with the front doors. If the doors are closed on the tubing, it can tip the bottle.
§ If the message persists, contact your Technical Support Provider.
Note: The Instrument continues to process tubes. These tests must be reviewed.

12407

Probe Wash Empty.

The Probe Wash load scale indicates that the volume of fluid remaining in the bottle is lower than the low level as configured in the database.

§ Refill the Probe Wash Bottle.
§ Ensure Probe Wash bottle is level on the Load Scale.
§ Check to see if the tubing is tucked inside the Instrument and does not interfere with the front doors. If the doors are closed on the tubing, it can tip the bottle.
§ If the message persists, contact your Technical Support Provider.
Note: The Instrument continues to process tubes. These tests must be repeated.

12408

Water Supply Low.

The Water Supply load scale indicates that the volume of fluid remaining in the bottle is lower than the warning level as configured in the database.

§ Refill the Water Supply Bottle.
§ Ensure Water Supply bottle is level on the Load Scale.
§ Check to see if the tubing is tucked inside the Instrument and does not interfere with the front doors. If the doors are closed on the tubing, it can tip the bottle.
§ If the message persists, contact your Technical Support Provider.
Note: The Instrument continues to process tubes. These tests must be reviewed.

12409

Water Supply Empty.

The Water Supply load scale indicates that the volume of fluid remaining in the bottle is lower than the low level as configured in the database.

§ Refill the Water Supply Bottle.
§ Ensure Water Supply bottle is level on the Load Scale.
§ Check to see if the tubing is tucked inside the Instrument and does not interfere with the front doors. If the doors are closed on the tubing, it can tip the bottle.
§ If the message persists, contact your Technical Support Provider.

Note: The Instrument continues to process tubes. These tests must be repeated.

12410

Liquid Waste Almost full.

The Liquid Waste load scale indicates that the volume of fluid remaining in the bottle exceeds the warning level as configured in the database.

§ Empty the Liquid Waste Container.
§ Ensure Liquid Waste bottle is level on load Scale.
§ If the message persists, contact your Technical Support Provider.

12411

Liquid Waste FULL.

The Liquid Waste load scale indicates that the volume of fluid remaining in the bottle exceeds the full level as configured in the database.

§ Empty the Liquid Waste Container.
§ Ensure Liquid Waste bottle is level on load scale.
§ If the message persists, contact your Technical Support Provider.

12412

Solid Waste Almost Full.

The Solid Waste load scale indicates that the weight of the Solid Waste Container exceeds the warning level as configured in the database.

§ Empty the Solid Waste Container.
§ Ensure Solid Waste Container is level on Load Scale.
§ If the message persists, contact your Technical Support Provider.

12413

Solid Waste FULL.

The Solid Waste load cell indicates that the weight of the Solid Waste Container exceeds the full level as configured in the database.

§ Empty the Solid Waste Container.
§ Ensure Solid Waste Container is level on Load Scale.
§ If the message persists, contact your Technical Support Provider.

12414

Tube hopper requires refilling.

The tube hopper sensor indicates that the level of tubes in the hopper has fallen below the low sensor.

§ Check Reaction Tube level and fill as necessary.
§ Manually move tubes around to cover the upper sensor.
§ If the message persists, contact your Technical Support Provider.

12500

Luminometer Temperature Low [Low Severity]

The temperature in the Luminometer is below the acceptable range.

§ Monitor temperature for two hours to determine if temperature is coming into range.
§ If the message persists, contact your Technical Support Provider.

12501

Luminometer Temperature High [Low Severity]

The temperature in the Luminometer is above the acceptable range.

§ Monitor temperature for two hours to determine if temperature is coming into range.
§ If the message persists, contact your Technical Support Provider.

12502

Incubator Temperature Low [Low Severity]

The temperature in the Incubator is below the acceptable range.

§ Monitor temperature for two hours to determine if temperature is coming into range.
§ If the message persists, contact your Technical Support Provider.

12503

Incubator Temperature High [Low Severity]

The temperature in the Incubator is above the acceptable range.

§ Monitor temperature for two hours to determine if temperature is coming into range.
§ If the message persists, contact your Technical Support Provider.

12504

Reagent Temperature Low

The temperature in the Reagent Carousel is below the acceptable range.

§ Monitor temperature for two hours to determine if temperature is coming into range.
§ If the message persists, contact your Technical Support Provider.

12505

Reagent Temperature High

The temperature in the Reagent Carousel is above the acceptable range.

§ Monitor temperature for two hours to determine if temperature is coming into range.
§ If the message persists, contact your Technical Support Provider.

12506

Substrate Temperature Low

The temperature of the Substrate Probe is below the acceptable range.

§ Monitor temperature for two hours to determine if temperature is coming into range.
§ If message persists, contact your Technical Support Provider.

12507

Substrate Temperature High

The temperature of the Substrate Probe is above the acceptable range.

§ Monitor temperature for two hours to determine if temperature is coming into range.
§ If the message persists, contact your Technical Support Provider.

12508

Instrument Ambient Temperature Under Cover High

Indicates that the ambient temperatures under the Instrument cover are above the acceptable range.

§ Contact your Technical Support Provider.

12509

Bead chamber humidity High for more than 50 cycles

The humidity reported from the Bead Chamber was above 20% relative humidity for more than 50 cycles.

§ Check for high ambient humidity.
§ Check to see if the Instrument was left in Diagnostics.
§ If the message persists for more than 6 hours, contact your Technical Support Provider.

12510

Luminometer Temperature Low

The temperature of the Luminometer is below the acceptable range.

§ Monitor temperature for two hours to determine if temperature is coming into range.
§ If the message persists, contact your Technical Support Provider.

12511

Luminometer Temperature High

The temperature of the Luminometer is above the acceptable range.

§ Monitor temperature for two hours to determine if temperature is coming into range.
§ If the message persists, contact your Technical Support Provider.

12512

Incubator Temperature Low

The temperature of the Incubator is below the acceptable range.

§ Monitor temperature for two hours to determine if temperature is coming into range.
§ If the message persists, contact your Technical Support Provider.

12513

Incubator Temperature High

The temperature of the Incubator is above the acceptable range.

§ Monitor temperature for two hours to determine if temperature is coming into range.
§ If the message persists, contact your Technical Support Provider.

12514

Temperature Mail Event Error

An error occurred during temperature data collection.

§ Contact your Technical Support Provider.

12600

Kit found but no matching Volume data. Call Technical Service.

Information for this kit is missing from the volume table of the main database.

§ Contact your Technical Support Provider.

12601

Dark count has exceeded the defined limit.

Dark count has exceeded the defined limit.

§ Contact your Technical Support Provider.

12602

Dark count is excessively high. Result is invalid. Please notify Technical Service

Dark count is excessively high.

§ Contact your Technical Support Provider.

12603

Result cannot be calculated. Kit lot deleted from database.

Kit lot not in database; deleted during run.

§ Rescan kit lot.
§ Rerun adjustments, controls, and/or patients.
§ If the message persists, contact your Technical Support Provider.

12604

The Accession Number has been overwritten.

Operator overwrote accession number.

§ Result may be invalid.

Note Confirm results and/or rerun sample.

12605

.

This error will only be seen in conjunction with Event 12604. It allows the software to post the original accession number.

§ See Event 12604.

12606

Multiple racks have been identified with the same rack letter. Please remove all duplicates.

Multiple racks on board with the same rack letter.

§ Remove duplicate racks from sample carousel.

12607

Error occurred while printing. Verify all results have printed.

The printer is not installed or the print spooler is disabled.

§ Make sure that the printer cartridges are full and installed correctly.
§ Check for printer jams.
§ If the message persists, contact your Technical Support Provider.

12608

Problem occurred adding tests to the worklist. Some tests may need to be re-ordered.

When selecting the OK button on the Test screen after adding tests for an accession number, this error displays if the system cannot create the workorders properly.

§ Reorder appropriate tests.
§ If the message persists, contact your Technical Support Provider.

13000

Invalid Data was received from the scanner

Bad scan of the Allergen Wedge barcode. No Allergen Wedge information appears on the reagent screen.

§ Contact your Technical Support Provider.

13001

Duplicate allergen wedge id.

Multiple Allergen Wedges with the same ID are on the reagent carousel.

§ Remove duplicate wedges.

13002

One or more accession numbers on the sample carousel contains an invalid character.

Invalid character used in the sample barcode.

§ Enter sample ID manually.
§ If the message persists, contact your Technical Support Provider.

14001

Unable to request Dual Port Ram Message Semaphore.

User side software was unable to communicate with the DPR.

§ The system will try again. This error will occur periodically during normal operation. Continued instances of this error will lead to other more severe errors.

14002

Unable to request Dual Port Ram Status Semaphore.

The system is trying to check data for a requested Loadcell status from the Dual Port.

§ If the message persists, contact your Technical Support Provider.

14003

Unable to request Dual Port Ram Carousel Semaphore.

The system is trying to check bead and reagent test counts and any error status from the Dual Port Ram.

§ If the message persists, contact your Technical Support Provider.

14004

Unable to request Dual Port Ram Loader Semaphore.

The system is trying to get information on status and availability of the Loader queue during VersaCell operations.

§ If the message persists, contact your Technical Support Provider.

14005

Unable to request Dual Port Ram Incubate Semaphore.

The system is trying to check the number of minutes left for tests in the incubator from the Dual Port Ram. This error can also occur in the AutoRack screen when accessing the Dual Port Ram for Incubator information.

§ If the message persists, contact your Technical Support Provider.

14007

Invalid Dual Port Ram Semaphore is requested.

While the system was trying to lock a semaphore, the program determines the semaphore request was an invalid type.

§ If the message persists, contact your Technical Support Provider.

14008

Unable to release Dual Port Ram Semaphore.

After retrieving the number of minutes left on tests, the system encounters an error when trying to release a Semaphore.

§ If the message persists, contact your Technical Support Provider.

14009

Dual Port Ram WRITE failure.

When trying to Write information into the Dual Port Ram, an error occurs.

§ If the message persists, contact your Technical Support Provider.

14010

Dual Port Ram READ failure.

When trying to Read information from the Dual Port Ram, an error occurs.

§ If the message persists, contact your Technical Support Provider.

14011

Unable to determine current instrument mode.

The Control computer was unable to determine which mode (Integrated or Non-Integrated) was selected on the system.

§ Contact your Technical Support Provider.

14012

Unable to set integrated mode on control PC. Please Contact Technical Service

The Control computer was not set to the Integrated mode that was selected on the system.

§ Contact your Technical Support Provider.

14013

Unable to set integrated mode on User PC. Please Contact Technical Service.

The User computer was not set to the Integrated mode that was selected on the system.

§ Contact your Technical Support Provider.

14014

Unable to set non-integrated mode on Control PC. Please Contact Technical Service.

The Control computer was not set to the Integrated mode that was selected on the system.

§ Contact your Technical Support Provider.

14015

Unable to set non-integrated mode on User PC. Please Contact Technical Service.

The User computer was not set to the Integrated mode that was selected on the system.

§ Contact your Technical Support Provider.

14016

Database error.

A problem occurred while querying the worklist for orders.

§ Contact your Technical Support Provider.

14017

Unable to read the Auto-Rack data.

An error occurred while trying to get the auto rack data from the DPRAM.

§ Contact your Technical Support Provider.

14019

Unable to update loader queue.

While using VersaCell to process orders, an error occurred when trying to load a work order into the Loader queue.

§ Processing will continue, but if an error occurs multiple times, contact your Technical Support Provider.

14020

Error occurred while sending query to the LIS.

While the VersaCell was querying the LIS for a specific accession number, an error occurred.

§ Processing will continue, but if an error occurs multiple times, contact your Technical Support Provider.

14030

Automation Rack cannot be used to process Control, Adjustor or Verifier.

A control, adjustor, or verifier was placed on the VersaCell.

§ Rerun the test after placing the control, adjustor, or verifier on the Sample Carousel of the system.
§ If the message persists, contact your Technical Support Provider.

14031

Please check the LIS screen to verify that all records are untagged. Call Technical Service

When switching from Integrated to Non-integrated mode, an error occurred while the LIS result records were being untagged.

§ Contact your Technical Support Provider.

14032

Changed to non-integrated mode. All result records have been untagged.

When switching between Integrated and Non-integrated modes, all result records are untagged, possibly preventing some records from being sent to the LIS.

§ Go to the LIS screen.
§ Manually tag results and resend.
§ If the message persists, contact your Technical Support Provider.

14034

Error building or sending system ordered test to the VersaCell.

An error occurred when the tests in the SMSHold table in the main data file were being retrieved to send to the VersaCell, or when the orders were being deleted from the SMSHold table after being retrieved.

§ If the message persists, contact your Technical Support Provider.

14035

Error retrieving or deleting records to send to VersaCell.

An error occurred when test order messages were being created or while they were being transmitted from the IMMULITE 2000 systems to the VersaCell. (ASTM protocol is used for these messages.)

§ If the message persists, contact your Technical Support Provider.

14036

Please select Run VersaCell from the VersaCell start screen.

VersaCell not running.

§ If the instrument is in integrated mode, startup the VersaCell program from the Desktop.

14041

Automation sample cannot be processed because there is a manually loaded sample with the same accession number.

There is a tube manually loaded on the Sample carousel that has the same accession number as a tube being brought over by the VersaCell. The VersaCell will return the tube instead of placing it in the automation rack.

§ Remove either the front loaded tube or the tube from the VersaCell as appropriate.

14045

The VersaCell and IMMULITE software versions are not compatible. The software cannot run in this state and will now log off. Please contact Technical Service.

The VersaCell and IMMULITE software versions are not compatible. The software cannot run in this state and will log off.

§ Contact your Technical Support Provider.

14046

Incorrect instrument serial number in message from VersaCell. Please Contact Technical Service.

The IMMULITE serial number(s) do not match the configuration setting for IMMULITE serial number(s) on the VersaCell.

§ Contact your Technical Support Provider.

14050

Error occurred preparing Sample Carousel (Q) message to send to VersaCell.

An error occurred while the software was creating a "Q" message containing sample carousel information to send from the IMMULITE 2000 to the VersaCell.

§ If the message persists, contact your Technical Support Provider.

14051

Error occurred sending Sample Carousel (Q) message to VersaCell.

An error occurred while the software was sending the "Q" message from the IMMULITE 2000/ to the VersaCell.

§ If the message persists, contact your Technical Support Provider.

14052

Error occurred preparing Unbarcoded Sample Tube (U) message to send to VersaCell.

An error occurred while the software was creating a "U" message containing information for a Unbarcoded tube on the Sample Carousel to send from the IMMULITE 2000 to the VersaCell.

§ If the message persists, contact your Technical Support Provider.

14053

Error occurred sending Unbarcoded Sample Tube (U) message to VersaCell.

An error occurred while the software was sending the "U" message from the IMMULITE 2000 to the VersaCell.

§ If the message persists, contact your Technical Support Provider.

14054

LIS Pass-Through message error retry timeout period has been increased.

This message will be logged when the IMMULITE 2000 tries to send a "Q" or "U" message to the VersaCell 10 times without success, and the software increases the to 60 seconds.

§ If the message persists, contact your Technical Support Provider.

14101

Some orders were not processed for an automation sample tube. Reintroduce sample to the Instrument. Check Worklist Display for details.

Due to a timing issue when connected to a VersaCell, some orders for the tube were sent to the Instrument after the Instrument started processing orders for the same sample tube already in the automation rack.

§ Check Worklist Display for details.
§ Reintroduce sample to the Instrument.

15000

(Acc #): Invalid Online Dilution has been ordered for the sample. Test not run.

Invalid dilution ordered.

§ Reorder the dilution using a valid selection.
§ If the message persists, contact your Technical Support Provider.

15100

Database Error – Cannot retrieve the dilution factor. Results may not be valid. Call Technical Service.

While accessing information on the Find/Display screen, an error occurred while retrieving a dilution factor from result information.

§ Contact your Technical Support Provider.

15101

Adjustor CPS Value equal 0. Please notify Technical Service immediately.

Kit information was incorrectly scanned into database, or possible database corruption.

§ Contact your Technical Support Provider.

15102

Error calibrating Substrate Load Scale. Contact Technical Service for assistance.

While trying to calibrate the Substrate Load scale, an error occurred. The value returned is not acceptable, and the default value will be used.

§ Contact your Technical Support Provider.

15103

Error calibrating ProbeWash Load Scale. Contact Technical Service for assistance.

While trying to calibrate the Probe Wash Load scale, an error occurred. The value returned is not acceptable, and the default value will be used.

§ Contact your Technical Support Provider.

15104

Error calibrating Water Load Scale. Contact Technical Service for assistance.

While trying to calibrate the Water Load scale, an error occurred. The value returned is not acceptable and the default value will be used.

§ Contact your Technical Support Provider.

15105

Error calibrating Liquid Waste Load Scale. Contact Technical Service for assistance.

While trying to calibrate the Liquid Waste Load scale, an error occurred. The value returned is not acceptable, and the default value will be used.

§ Contact your Technical Support Provider.

15106

Error calibrating Solid Waste Load Scale. Contact Technical Service for assistance.

While trying to calibrate the Solid Waste Load scale, an error occurred. The value returned is not acceptable, and the default value will be used.

§ Contact your Technical Support Provider.

15107

Error in result calculation.

While calculating the dose, there was a calculation error with a formula.

§ Contact your Technical Support Provider.

15108

Database Error. Please contact Technical Service.

Database may be corrupt, or there was a problem writing information to the database.

§ Contact your Technical Support Provider.

15114

Database Error. Qualitative Parameters are not available. Call Technical Service.

Qualitative parameters are not available, contain incorrect data, or a qualitative test has an invalid result.

§ Contact your Technical Support Provider.

15120

Failed printing the confirmatory results report.

An error occurred while printing confirmatory test results.

§ Ensure printer is online with adequate paper.

15121

Failed printing the screen.

An error occurred while trying to do a screen print confirmatory test option screen.

§ Ensure printer is online with adequate paper.

15122

Failed ordering confirmatory HBS tests.

When ordering confirmatory tests on the screen, an error occurred when the Save button was selected.

§ Check to make sure the required information was entered.
§ Contact your Technical Support Provider.

15125

Report cannot be sent to printer

A report cannot be reprinted for a specific accession number because of a printer issue (printer driver not installed or printer not configured).

§ If the message persists, contact your Technical Support Provider.

15126

Printer Error

A Printer error of some type occurred.

§ Check that printer is online.
§ Check that paper and ink are in the printer.
§ Check that cables are secure.

15127

Report cannot be printed. Patient information is invalid or missing.

When the program is preparing to print the report either the Patient ID number, the Accession number, or Test type is missing from the record to be printed.

§ If the message persists, contact your Technical Support Provider.

15128

Error during Report Editing.

While editing the report format on the screen an error occurs because data or formatting is not correct.

§ If the message persists, contact your Technical Support Provider.

15130

Error reading Sample carousel Data. Instrument will finish transitioning into Run mode and then enter Sample Pause mode. This could take several minutes…Please wait.

The User-side software does not know what sample racks were scanned because information was not retrieved from the DPRAM.

§ If the message persists, contact your Technical Support Provider.

15132

Failed printing the reflexive test range report.

The Reflexive test range report was not able to print because of a printer problem or because the program could not access the data in the database.

§ If the message persists, contact your Technical Support Provider.

17001

Kit barcode signature incorrect. This is not a valid $IM2K$ Kit Barcode.

The Kit barcode signature is incorrect for the instrument where the kit is being scanned.

§ Verify that the kit is for the IMMULITE 2000 System.
§ If the problem persists, contact your Technical Support Provider.

17011

Could not find volume table data for this kit.

The Test Type and Kit Lot number could not be found in the database where the test volumes are stored.

§ Rescan the Kit, and if the problem persists, contact your Technical Support Provider.

17012

There is a problem with the registry on this system. Please contact Technical Services.

The program is trying to determine the Instrument type (2000 or 2000 XPi) by reading the registry and cannot find the information.

§ Reinstall program, and if the problem persists, contact your Technical Support Provider.

17014

Duplicate accession numbers found on the Sample Carousel.

Two or more sample tubes with the same sample accession number were found during a sample carousel read. Different cases of the same accession number are detected as being duplicates.

§ Remove all but one of the samples with the common accession number.
§ Ensure that the sample left on board is for the correct patient.

17015

The user side software has shut down due to an unexpected error. Press the RUN IMMULITE button after closing this message to continue the current run. Contact Technical Service to report this error

Unexpected Error was generated in a procedure during program execution..

§ If the message persists, contact your Technical Support Provider.

17100

Allergy Rescan configuration has been turned off.

Allergy Rescan Override configuration setting has been changed from On to Off. This message is logged for informational purposes.

17101

Allergy Rescan configuration has been turned on.

Allergy Rescan Override configuration setting has been changed from Off to On. This message is logged for informational purposes.

17102

User acknowledged that no Allergy wedges were changed while logged off.

The user acknowledged that no Allergy wedges were changed while logged off by pressing the Yes button of the confirmation (second prompt) message box at initialization.This message is logged for informational purposes.

17103

User acknowledged that all changed Allergy wedges were rescanned.

The user acknowledged that all changed Allergy wedges were rescanned by pressing the Yes button on the confirmation (second prompt) message box initiating the transition to Run.This message is logged for informational purposes.

17104

Deleting Allergy wedge data because of user acknowledgement timeout.

The IMMULITE is automatically deleting Allergy wedge data because the user failed to respond to the message box initiating the transition to run.This message is logged for informational purposes.

17105

Deleted Allergy wedge data because of incomplete reagent scans on the previous run.

The IMMULITE is automatically deleting Allergy wedge data because incomplete reagent scans on the previous run could result in specific allergens to be reported out of place.This message is logged for informational purposes.

§ Before running allergy tests, rescan all Allergy wedges.

17111

No Configured Language! Defaulted to English.

The program could not find the configuration setting for the Language, the program will log the information in the Event log and continue to run using English as a default. This message is logged for informational purposes.

18001

Please call Technical Service to schedule a Preventative Maintenance appointment.

For Non- RTS customers this message will be displayed when the current test count reached the threshold count set by the Field Service Engineer indicating a PM is needed.

§ Contact your Technical Support Provider.

18002

PM Schedule notification acknowledged.

This message goes into the Daily Error Log when the operator acknowledges the PM notification message for Non-RTS customers. For RTS customers the message goes in the errorlog automatically when they reach the test count threshold. This message is logged for informational purposes.

18003

PM Performed--See PM Tracker Log

This message is written to the Daily Error Log when the the Field Service Engineer has performed the PM using the PM Tracker Utility.

18004

Threshold Test Count Updated--See PM Tracker Log

This message is written to the Daily Error Log when the the Field Service Engineer has updated the Threshold Test Count using the PM Tracker Utility.

19001

This confirmatory test is not defined. Please Contact Technical Service.

The Onboard HBsAg Confirmatory test is not defined in the confirmatory kit definition table. An error occurred reading the test name or obtaining information from the database.

§ Contact your Technical Support Provider.

19005

Kit Error. No valid HBS diluent tube onboard.

An error occurred while trying to place the Onboard HBS Confirmatory test into the queue because there was no diluent available.

§ Ensure diluent is on board.
§ Verify that diluent barcode is facing out.
§ Verify that diluent barcode is not damaged.
§ If the message persists, contact your Technical Support Provider.

19006

Kit Error. No valid HBS bead pack onboard.

An error occurred because the program could not find the required beads on board the instrument for the HBS Confirmatory tests being ordered.

§ Ensure bead pack is on board
§ Ensure bead pack barcode is present and not damaged

19007

Kit Error. Not enough HBS beads onboard.

The program has determined that not enough beads are available to run the pair of confirmatory tests that are being ordered.

§ Load a bead pack from the same kit lot.
§ If an additional bead pack for the same kit lot is not available, add new HBS kit and repeat HBS Confirmatory testing.

19008

Kit Error. A valid HBS Negative Control result is not available.

The program has checked the Control Status of the primary HBS kit that is currently active, and the control status is not valid and cannot be used.

§ Try running a negative control.

19009

Kit Error. The HBS Negative Control result has expired.

The negative HBS control has not been run, or it has been more than 28 days since the negative control has been run.

§ Run the negative HBS control.

19010

Kit Error. No valid HBS reagent wedge onboard.

No matching HBsAg reagents are on board, or a reagent that is on board is not available for use.

§ Load a new reagent wedge of same kit lot or load new HBsAg kit. If you load new HBsAg kit, you need to run adjustor and Negative HBsAg control prior to running HBS Confirmatory testing.

19011

Kit Error. Not enough HBS reagent onboard.

Not enough tests are left in the HBsAg reagent compartment needed for tests being ordered.

§ Load a new reagent wedge of same kit lot or load new HBsAg kit. If you load new HBsAg kit, you need to run adjustor and Negative HBsAg control prior to running HBS Confirmatory testing.

19012

Kit Error. No valid HBS Confirmatory reagent wedge onboard.

No matching HBsAg Confirmatory reagents are on board or a reagent that is on board is not available for use.

§ Load a new reagent wedge of same kit lot or load new HBsAg kit. If you load new HBsAg kit, you need to run adjustor and Negative HBsAg control prior to running HBS Confirmatory testing.

19013

Kit Error. Not enough HBS Confirmatory reagent onboard.

Not enough tests are left in the HBS Confirmatory reagent compartment needed for tests being ordered.

§ Load a new reagent wedge of same kit lot or load new HBsAg kit. If you load new HBsAg kit, you need to run adjustor and Negative HBsAg control prior to running HBS Confirmatory testing.

19016

Invalid Confirmatory test ordered from LIS.

The confirmatory test sent via the LIS or VersaCell does not have the correct format, or the test was not found in the Kits table.

19017

Confirmatory Testing Enabled.

This message is logged when Automated HBsAg Confirmatory testing is enabled from the configuration screen. This message is logged for informational purposes.

19018

Confirmatory Testing Disabled.

This message is logged when Automated HBsAg Confirmatory testing is disabled from the configuration screen. This message is logged for informational purposes.

19021

Eject rack command failed.

User Side Failed to write Eject command to DPRAM. This may be because the User side thinks it is an invalid rack position, the queue that holds instrument messages is full, or a semaphore cannot be accessed.

§ Try to manually eject the rack.
§ If the message persists, contact your Technical Support Provider.

19022

Duplicate rack identified. Rack will be ejected automatically.

Two or more racks loaded on the system have the same Rack ID. This message is logged for informational purposes.

20000

Unexpected error while initializing instrument. Contact Technical Service.

The Feature Configuration Component Failed during Start-up.

§ Contact your Technical Support Provider.

20001

Handheld scanner error. Contact Technical Service.

COM port used by the handheld scanner was not detected by the Operating System. Occurs with error 8002 (Invalid port error).

§ Contact your Technical Support Provider.

20100

AutoStart will not be performed due to insufficient water supply.

Not enough water to run AutoStart processing.

§ Ensure sufficient water supply is available.
§ If the message persists, contact your Technical Support Provider.

20101

Automatic Substrate dispense will not be performed due to insufficient substrate supply.

Not enough substrate to run substrate dispense processing.

§ Ensure sufficient substrate is available.
§ If the message persists, contact your Technical Support Provider.

20102

AutoStart will not be performed due to insufficient probe wash.

Not enough probe wash to run AutoStart processing.

§ Ensure sufficient probe wash is available.
§ If the message persists, contact your Technical Support Provider.

20104

AutoStart will not be performed due to insufficient water and probe wash.

Not enough water and not enough probe wash for AutoStart processing.

§ Ensure sufficient probe wash and water is available.
§ If the message persists, contact your Technical Support Provider.

20107

AutoStart will not be performed due to an error while checking consumables.

An error was encountered while checking consumables specifically for water, substrate, and probe wash levels.

§ If the message persists, contact your Technical Support Provider.

20108

Unexpected error during AutoStart processing. Contact Technical Service.

An unexpected general error in AutoStart processing.

§ Contact your Technical Support Provider.

20109

AutoStart cancelled by Operator.

User cancelled AutoStart routine by selecting the cancel button from the interface. This message is logged for informational purposes.

§ No action needed .

20111

Unexpected error during AutoStart processing. Contact Technical Service.

General AutoStart processing error. Unexpected error or Control side may have gone into Stop because of an error.

§ Verify that the ~Probe Clean tube is onboard with ample probe clean solution.
§ Other more detailed errors may be seen in the Daily Error log within a 15 minute period prior to this error posting that may provide additional information.
§ Contact your Technical Support Provider.

20120

Manual AutoStart initiated.

Manual AutoStart processing has begun. This message is logged for informational purposes.

20121

Scheduled AutoStart initiated.

Automatic AutoStart processing has begun. This message is logged for informational purposes.

20122

Substrate has not been primed. QC Worklist will not run.

Substrate not in a ready to run state. It has not been primed in the necessary time frame (2 hours). QC Worklist will not run.

§ Manually prime the substrate and put the system into run when complete.
§ QC Worklist can be run by using the "Immediate" functionality of the Schedule QC Worklist prompt.

20123

AutoStart processing complete.

AutoStart processing (daily maintenance tasks) complete. This message is logged for informational purposes.

20124

AutoStart aborted by Operator.

Operator selected to abort AutoStart. This message is logged for informational purposes.

20125

Instrument was in an invalid state to run scheduled AutoStart.

Instrument not in valid state to launch AutoStart (scheduled AutoStart).

§ Manual - must be in Stop or splash screen.
§ Scheduled – must be at desktop, Splash screen, or stop modeg.

Note For systems connected to a VersaCell, Scheduled AutoStart can be run if the instrument is in Run mode, and no tests are currently processing.

20126

AutoStart was cancelled from the countdown screen.

Operator selected to cancel AutoStart from the AutoStart countdown screen. This message is logged for informational purposes.

20150

Automatic substrate dispense initiated.

System logs this information when automatic Substrate dispense initiates.

20151

Automatic Substrate Dispense complete.

System logs this information when automatic Substrate dispense completes.

20152

Automatic substrate dispense aborted by Operator.

Operator selected to abort automatic substrate dispense. This message is logged for informational purposes.

20153

Instrument was in an invalid state to run automatic substrate dispense.

Instrument not in a defined valid state for AutoStart automatic substrate dispense processing.

§ Manual - must be in Stop or splash screen.
§ Scheduled – must be at desktop, Splash screen, or stop modeg.

Note For systems connected to a VersaCell, Scheduled AutoStart can be run if the instrument is in Run mode, and no tests are currently processing.

20154

Substrate dispense cancelled from the countdown screen.

Operator selected to cancel substrate dispense from the countdown screen. This message is logged for informational purposes.

20155

Substrate dispense processing timed out.

Can be any of the causes in errors 861–864.

§ Contact your Technical Support Provider.

20156

Failure reported in substrate dispense processing.

Any error on the control side that causes the instrument to stop substrate dispense processing.

§ Check Daily error log for any mechanical failures
§ Contact tech svc

20157

The automatic substrate dispense did not complete. Manually prime Substrate.

Automatic substrate dispense attempted to run, however it has been more than two hours since the last substrate dispense (whether by test processing, manual prime or the last automatic substrate dispense). Scheduled QC associated with AutoStart will not run.

§ Manually prime Substrate.
§ Run Scheduled QC worklist with the "immediate" option.

20200

Unexpected error. AutoStart will not be performed. Contact Technical Service.

Unexpected error retrieving data from the database.

§ Attempt manual AutoStart.
§ If failure still occurs, contact your Technical Support Provider.

20201

Unexpected database error. AutoStart will not be performed. Contact Technical Service.

Unexpected data in the database.

§ Contact your Technical Support Provider.

20202

Unexpected error. AutoStart will not be performed. Contact Technical Service.

Unexpected error in software component for AutoStart.

§ Contact your Technical Support Provider.

20203

Unexpected error. AutoStart will not be performed. Contact Technical Service.

Error occurred trying to launch AutoStart processing.

§ Attempt manual AutoStart.
§ If failure still occurs, contact your Technical Support Provider.

20205

AutoStart processing timed out waiting for logoff.

User software took longer than expected to log off the User side software.

§ Logoff software and try manual AutoStart from splash screen.

20206

AutoStart failed to launch the IMMULITE 2000 XPi software.

Failure occurred while trying to launch or re-launch user software during AutoStart process.

§ Retry AutoStart processing from start-up screen.

20207

Unexpected error. AutoStart will not be performed. Contact Technical Service.

System could not obtain information necessary for AutoStart processing from the registry.

§ Contact your Technical Support Provider.

20208

AutoStart failed to open the daily event log.

Error occurred while attempting to log an event or an error to the unexpected event log.

§ May resolve when AutoStart is run again, otherwise contact your Technical Support Provider.

20209

Instrument is not in a valid state for AutoStart processing.

Instrument is not in one of the defined valid states for AutoStart processing.

§ Manual - must be in Stop or splash screen.
§ Scheduled – must be at desktop, Splash screen, or stop modeg.

Note For systems connected to a VersaCell, Scheduled AutoStart can be run if the instrument is in Run mode, and no tests are currently processing.

20210

Unexpected error. AutoStart will not be performed. Contact Technical Service.

Error occurred while trying to access a specific part of the shared memory for the user and control side computers.

§ Contact your Technical Support Provider.

20211

Unexpected error. AutoStart will not be performed. Contact Technical Service.

An error occurred while trying to communicate with the shared memory between the user and control computers.

§ Retry AutoStart.
§ If that fails, contact your Technical Support Provider.

20212

Error logging operating system logon time.

The software logs the time that the system is restarted so that when AutoStart processing occurs, the system can determine whether or not a reboot is required.

If this error occurs, a reboot may occur during AutoStart when it has actually been less than 24 hours since the last system reboot.

20214

Error while ordering scheduled QC. One or more QC orders may not run.

If any error in creating the QC worklist orders is detected, then one or more QC may not run.

§ Check for any tests on the Scheduled QC Worklist that have not been run. Re-order as necessary.

20215

Autostart timed out waiting for substrate dispense to complete.

The substrate dispense completion message did not get sent/received within the timeout period.

§ Attempt manual AutoStart.
§ If failure still occurs, contact your Technical Support Provider.

20220

Scheduled QC Worklist has been ordered.

The QC Worklist was ordered successfully. This message is logged for informational purposes.

20221

Scheduled QC Worklist has been canceled.

The QC Worklist was canceled by the operator. This message is logged for informational purposes.

21025

Failed to Send Results to External Monitoring System. Instrument can continue running. Contact Technical Services if the problem persists.

Failed to build any of the result messages.

§ if the problem persists, contact your Technical Support Provider.

21030

Failed to Send Instrument Status to External Monitoring System. Instrument can continue running. Contact Technical Services if the problem persists

Communication send failure

§ if the problem persists, contact your Technical Support Provider.

21031

Failed to Send Instrument Error to External Monitoring System. Instrument can continue running. Contact Technical Services if the problem persists

Communication send failure

§ if the problem persists, contact your Technical Support Provider.

21032

Failed to Send Instrument Inventory to External Monitoring System. Instrument can continue running. Contact Technical Services if the problem persists.

Communication send failure

§ if the problem persists, contact your Technical Support Provider.

21033

Failed to Send Patient Result to External Monitoring System. Instrument can continue running. Contact Technical Services if the problem persists.

Communication send failure

§ if the problem persists, contact your Technical Support Provider.

21034

Failed to Send Control Result to External Monitoring System. Instrument can continue running. Contact Technical Services if the problem persists.

Communication send failure

§ if the problem persists, contact your Technical Support Provider.

21035

Failed to Send Adjustor Result to External Monitoring System. Instrument can continue running. Contact Technical Services if the problem persists.

Communication send failure

§ if the problem persists, contact your Technical Support Provider.

21036

Failed to Send Kit Adjustment status to External Monitoring System. Instrument can continue running. Contact Technical Services if the problem persists.

Communication send failure

§ if the problem persists, contact your Technical Support Provider.

21037

Failed to Send Verifier Result to External Monitoring System. Instrument can continue running. Contact Technical Services if the problem persists.

Communication send failure

§ if the problem persists, contact your Technical Support Provider.

21038

Failed to Send QC Comment change to External Monitoring System. Instrument can continue running. Contact Technical Services if the problem persists.

Communication send failure

§ if the problem persists, contact your Technical Support Provider.

21041

Instrument communication to External Monitoring System is currently unavailable due to start up error(s). Instrument can continue running. Contact Technical Services.

§ if the problem persists, contact your Technical Support Provider.

21100

Kit Load Report encountered an error while loading data. Contact Technical Service if the problem persists.

While accessing the Kit Load Report feature in the software, an unexpected error occurred.

§ if the problem persists, contact your Technical Support Provider.

Appendix I: Hepatitis Confirmatory Testing

The Hepatitis Confirmatory Testing feature enables the system to associate the patient accession number with the Confirmatory Sample ID, perform calculations, and report the percent signal reduction and an interpretation confirmed or unconfirmed.

Both manual and automated confirmatory tests are intended for the *in vitro* confirmation of the presence of Hepatitis B Surface Antigen (HBsAg) in a patient sample that has tested repeatedly reactive for HBsAg.

Manual Confirmatory Testing

Note Prepare confirmatory samples offline before running manual confirmatory testing.

HBsAg Positive Control

The HBsAg Positive Control supplied with the IMMULITE 2000 HBsAg (HBS) kit is required and is used as quality control material to monitor assay performance of the HBsAg Confirmatory Kit.

Prepare and run undiluted blocked and unblocked samples of the HBsAg Positive Control once, each time HBsAg Confirmatory tests are performed.

Barcode labels are provided for the Positive Confirmatory Control Blocked (CB) and Control Unblocked (CU) samples.

Note A negative HBS control is required for confirmatory calculations and must be run before the HBsAg confirmatory tests. This control is typically run as part of routine HBS testing.

Ordering Hepatitis Confirmatory Tests

To order Hepatitis Confirmatory Tests, perform the following steps:

1. Select **MENU**.
2. At the Menu screen, select **Confirm HBS**.
3. To enter the original sample ID, perform one of these options:
   - Scan the patient sample tube barcode label.
   - Manually enter the number into the Original Sample ID field.
4. To enter the confirmatory sample ID, perform one of these options:
   - Scan the confirmatory sample ID barcode label.

- Manually enter the number, which has a maximum 4 numerical characters, into the Confirmatory Sample ID field.

All blocked and unblocked fields for undiluted and diluted samples, and positive confirmatory controls will automatically populate.

5. Select the HBS kit lot number from the drop-down list.

   This list displays the number of tests remaining for each kit lot on board the system and is refreshed each time the screen is opened.

   Note This is the lot number of the HBS kit used for testing. Do not enter the kit lot of the HBsAg Confirmatory Kit.

6. Select **ORDER** for the appropriate sample type(s) to be run:
   - undiluted
   - diluted
   - both

   The system only creates orders for the sample types for which you selected using the ORDER button.

   Note To cancel an order, select **CANCEL** before selecting **ACCEPT**.

7. Select **ACCEPT**.

   The HBS confirmatory test orders are sent to the worklist, and the fields are cleared.

Ordering Positive Confirmatory Control

To order the positive confirmatory control perform the following steps:

1. Enter HBS POS in the Original Sample ID field.

   Note Do not scan the HBS control barcode label.

2. To enter the positive confirmatory control ID, perform one of these options:
   - Scan the confirmatory control barcode label
   - Manually enter the number into the Confirmatory Sample ID field
3. Select **ORDER** for the Positive Confirmatory Control.
4. Select **ACCEPT**.
5. To print the screen information, select **PRINT SCREEN**.
6. Select **CLOSE** to exit the HBS Confirmatory Test Entry screen.

Loading and Processing Confirmatory Samples

Note The system does not query the LIS for the HBsAg confirmatory test samples.

After ordering HBsAg confirmatory tests, perform one of the following procedures to load the samples on the system for processing:

- *Loading Samples onto the IMMULITE 2000 System*, page 2-4
- *Loading Samples onto the IMMULITE 2000 XPi System*, page 2-5

The system processes the tests:

- The confirmatory test samples print automatically, qualitative or qualitative and ratio results.
- Results are not automatically sent to the LIS.
- Reflexive testing is not performed on HBS confirmatory samples.

Reviewing Results of Manual Confirmatory Testing

Detailed confirmatory results are available on the HBS Confirmatory Report. To print the HBS Confirmatory Report, perform the following steps:

1. Select **MENU**.
2. At the Menu screen, select **Confirm HBS**.
3. Select **DATE TIME RANGE**.

   The Select Time Method screen displays.
4. Select dates and times from the **FROM** and **TO** fields.
5. Select **OK**.
6. Select **PRINT RESULTS**.

Automated Hepatitis B Surface Antigen Confirmatory Testing

Introduction

Automated Hepatitis B Surface Antigen Confirmatory Testing using the IMMULITE 2000 HBsAg Confirmatory Kit (L2KCH1) is offered on board the IMMULITE 2000/2000 XPi systems as an alternative to manual confirmatory testing using the IMMULITE HBsAg Confirmatory Kit (LKCH). Both confirmatory tests are intended for the *in vitro* confirmation of the presence of Hepatitis B Surface Antigen (HBsAg) in a patient sample that has tested repeatedly reactive for HBsAg.

The Automated HBsAg Confirmatory Testing feature enables the system to automatically prepare the sample by diluting it as needed, and mixing with blocking/buffer reagent.

You can apply an Efficiency Zone cutoff during Automated HBsAg Confirmatory Testing to reduce the testing time, and the number of tests processed. The Efficiency Zone cutoff value is 100 and cannot be changed. If at least 2 of 3 result ratios are ≥ 100 for an individual sample, the patient sample may be reported as reactive and does not require IMMULITE 2000 HBsAg Confirmatory Testing.

Note When HBsAg is used as a stand-alone assay for screening pregnant women to identify neonates who are at risk for acquiring HBV during the perinatal period, you must use supplemental testing, such as the IMMULITE 2000 HBsAg Confirmatory Kit (L2KCH1), to confirm the result regardless of whether reactive ratio results are above or below 100.

Note Automated HBsAg Confirmatory Testing with the IMMULITE 2000/2000 XPi systems requires an IMMULITE 2000 HBsAg Confirmatory Kit (L2KCH1) and a Hepatitis B Surface Antigen assay kit (L2KHB2). Availability of the IMMULITE 2000 HBsAg Confirmatory Kit (L2KCH1) is dependent upon local regulatory approvals.

Note For VersaCell system users, Automated HBsAg Confirmatory Testing is not supported.



WARNING

Do not use tube top sample cups or microsample tubes for Automated HBsAg Confirmatory Testing.

IMMULITE 2000 HBsAg Confirmatory Kits

The IMMULITE 2000 HBsAg Confirmatory Kit (L2KCH1) includes 1 reagent wedge and two 2D barcodes for use with the Hepatitis B Surface Antigen (HBS) assay. One barcode includes information to process undiluted sample material, while the other barcode includes information to process diluted sample material. The system software identifies HBsAg Confirmatory Tests as follows:

Barcode	Test Type	Sample Material to Run	Protocols	Individual Test Identifiers
1	HBSU	Undiluted	Unblocked	HBSUU
			Blocked	HBSUB
2	HBSD	Diluted (1:500)	Unblocked	HBSDU
			Blocked	HBSDB

Note You must run HBsAg controls to evaluate kit adjustment and run a negative control when performing confirmatory testing. To order HBsAg Confirmatory Tests, a valid negative control result is required.

Note The HBsAg Positive Control, supplied with the IMMULITE 2000 HBsAg Confirmatory Kit, is required and is used as quality control material to monitor the assay performance.

For diluted confirmatory tests (HBSDU and HBSDB), use the HBsAg Confirmatory Sample Diluent (L2CHZ2). Diluent L2CHZ2 comes with a barcode label to apply to a 16 x 100-mm sample tube.

Note For additional information about the IMMULITE 2000 HBsAg Confirmatory Kit (L2KCH1), refer to the Instructions For Use (IFU) enclosed in the kit.

Procedures

The following instructions explain how to configure and perform Automated HBsAg Confirmatory Testing on the IMMULITE 2000/2000 XPi systems. Automated HBsAg Confirmatory Testing requires both an IMMULITE 2000 HBsAg Confirmatory Kit (L2KCH1) and an IMMULITE 2000 Hepatitis Surface Antigen assay kit (L2KHB2).

Requirements for Automated HBsAg Confirmatory Testing

Automated ordering of HBsAg Confirmatory Testing only occurs if all of the following requirements are met:

- Automated confirmatory testing is enabled.
- HBS is configured to automatically run confirmatory tests.

- Reflexive testing is enabled and configured for HBS in duplicate.

  Note To configure reflexive testing, see *Configuring Reflexive Tests*, page I-7.
- Patient primary HBS test is REACTIVE
- At least 1 of 2 HBS Reflexive tests is REACTIVE.
- The system is not in Integrated mode.

Activating HBsAg Onboard Confirmatory Testing

The following procedure explains how to configure the system to perform automated Onboard Confirmatory testing:

Note You have to enable this feature to automatically order confirmatory tests.

1. Select **Menu**.
2. Select **Configure**.

   The Options window displays.
3. Select **Configuration Settings**.

   The Configuration Settings window displays.
4. If Reflexive testing is not activated, select the **Reflexive Testing** option in the Testing Options box.
5. To activate Onboard Confirmatory testing, select the **Confirmatory Testing** option in the Testing Options box.

   The following message displays:

   ```
   Onboard confirmatory testing has been enabled. Go
   to the Onboard Confirmatory screen to configure
   individual tests for confirmatory testing.
   ```

6. Select **OK**.

Note When disabling Onboard Confirmatory testing, the following message displays:

```
Onboard confirmatory testing has been turned off
and Onboard confirmatory configurations for
individual tests have been disabled. The system
will no longer automatically perform confirmatory
testing. Continue?
```

Select **Yes** to proceed or **No** to cancel the change.

7. Select **Save**.

Configuring Reflexive Tests

Note Before configuring Reflexive Tests, you must scan in the HBS kit L2KHB2.

To configure the system for Reflexive testing, perform the following actions:

1. Select **Menu**.
2. Select **Reflexive Tests**.
3. In the Principle Test Selection box, select **Immunoassay – All Available**.

   Note This assumes that HBS does not have a defined range.
4. From the **Principle Test** drop-down list, select **HBS**.
5. In the New Range box, select **Above**.
6. To display the Reflex Range window for HBS, select **Add Range**.
7. In the **Above** field, enter **0.99**.

   Note A result ratio ≥ 1.0 is reactive.
8. In the TEST CATEGORIES box, select **IMMUNOASSAY**.
9. Select **HBS** twice.

   The code displays twice in the TESTS SELECTED field.

   Note If the Patient primary HBS test is reactive, the system reflexes 2 more tests.
10. Select **Save**.
11. To print the contents of the Current Ranges box, select **Print**.
12. To close the Reflexive Testing Configuration screen, select **Close**.

Configuring Automatic Onboard Confirmatory Testing

If Onboard Confirmatory Testing is configured, the Patient primary HBS test is reactive, and 1 of the 2 reflexive tests is reactive, the system automatically runs confirmatory testing.

To configure the system for HBsAg Onboard Confirmatory testing, perform the following actions:

1. Select **Menu**.
2. Select **Onboard Confirmatory Testing**.

   The Onboard Confirmatory Testing screen displays.
3. In the Principle Test Selection box, select one of the following:

Selection	Description
All Available	**Note** The first time you configure Onboard Confirmatory testing, you must select All Available. All tests available for Onboard Confirmatory testing display in the Principle Test drop-down list.
Currently Configured for Confirmatory Testing	Only tests currently configured for Onboard Confirmatory testing display in the Principle Test drop-down list.

4. From the **Principle Test** drop-down list, select **HBS**.

   Note Onboard confirmatory tests are not automatically ordered if **Use Efficiency Zone Reporting** is selected. If at least 2 of 3 result ratios for HBsAg are ≥ 100 for an individual sample, the patient sample may be reported as reactive and does not require IMMULITE 2000 HBsAg Confirmatory Testing.
5. Select or clear the **Use Efficiency Zone Reporting** check box.

   Note Yes displayed in the Available column indicates the procedure is defined for the assay selected in step 4.
6. In the Selected column, select a radio button for a defined Confirmatory Test Procedure.

The following are Confirmatory Test Procedures that may be defined:

Note As described in the Instructions for Use (IFU) accompanying the HBsAg Confirmatory Kit, select either the first or second option.

Confirmatory Test Procedure	Description
No Automatic Confirmatory Testing.	Configure Onboard Confirmatory testing for no automatic confirmatory test orders.
Run Undiluted and Diluted.	Configure Onboard Confirmatory testing to run confirmatory tests on a neat and a diluted sample.
Run Undiluted. If Not Confirmed, Run Diluted.	Configure Onboard Confirmatory testing to run confirmatory tests on a neat sample, then a diluted sample only if the neat sample results are not confirmed.

7. Select **Save**.
8. If Run Undiluted and Diluted is selected, the following prompt displays after saving a selection:

   ```
   Onboard confirmatory testing has been enabled for
   HBS. HBS must be configured for Reflexive Testing
   to generate automatic orders of Onboard
   Confirmatory tests.
   ```

   Select **OK**.

Note You can manually order confirmatory tests for a sample using the Worklist or LIS at any time, regardless of the automatic confirmatory test procedure you selected. Refer to *Manually Ordering HBsAg Confirmatory Tests*, page I-11.

Scanning the 2D Barcodes

1. Scan both HBS Confirmatory kit barcodes using the 2D Barcode Scanner.

The scanned information displays on the Kits screen.

Figure I-1: The Kits Screen

IMMULITE 2000 HBS Confirmatory

Kit Lot	xxx	Diluent	CH
Kit Expiration	mm/dd/yy	Kit Status	Valid

Test Type	Test Code	Description
HBSD	HBSDU	Diluted Unblocked
HBSD	HBSDB	Diluted Blocked
HBSU	HBSUU	Undiluted Unblocked
HBSU	HBSUB	Undiluted Blocked

2. Insert the reagent wedge from the IMMULITE 2000 HBsAg Confirmatory Kit (L2KCH1) into the reagent carousel.

   For detailed instructions, refer to
   Replacing Reagent Wedges, page 2-16.

Loading the HBsAg Confirmatory Samples

For detailed sample loading instructions, refer to the *Labeling and Loading Sample Tubes*, page 2-1.

Note For VersaCell users, Automated HBsAg Confirmatory Testing is not supported.

WARNING
Do not use tube top sample cups or microsample tubes for Automated HBsAg Confirmatory Testing.

HBsAg Confirmatory Testing sample volume requirements (in addition to the dead volume of 250 µL) are as follows:

Sample Volume Requirements	
Initial and 2 reflex tests	300 µL
2 undiluted replicates	400 µL
2 diluted replicates	10 µL
Total (without dead volume)	710 µL

Before running HBsAg Confirmatory Testing, perform the following actions:

1. If running diluted tests, load the barcoded diluent tube onto the Sample Carousel of the system.
2. Load the samples onto the Sample Carousel of the system.

Manually Ordering HBsAg Confirmatory Tests

Follow these steps to manually order Automated HBsAg Confirmatory Tests using the worklist:

1. From the vertical toolbar, select **RUN**.

   The sample carousel is scanned.

2. When the sample carousel has been scanned completely, select **WORKLIST** from the horizontal toolbar.

   The Worklist window displays.

3. To locate the next barcoded sample to add to the worklist, select **Next**.
4. If necessary, assign a Name, Patient ID, Birthdate, and Physician to the sample.
5. At the Worklist window, select **TESTS**.

   The Available Tests window displays a list of available tests.

6. Add HBsAg Confirmatory Tests to the Worklist:
   a. Under Confirmatory, select **ON BOARD**.

      Buttons for the available confirmatory tests display.

   b. Select the button for each confirmatory test to add.

      The code for each test chosen displays in the TESTS SELECTED field. Refer to *IMMULITE 2000 HBsAg Confirmatory Kits*, page I-5.

      Note To remove a test from the TESTS SELECTED field, select the test.

7. Specify replicates of the tests added to the worklist, or if replicates are not needed, then proceed to Step 8:
   a. Select a test in the **TESTS SELECTED** field and select **REPLICATES**.

      The Replicates window displays.

   b. Select the number of replicates to perform using the arrow buttons, or enter the number using the keyboard.
   c. To save this number and close the Replicates window, select **OK**.
   d. Repeat this process for all tests that require replicates.

8. When finished selecting tests, at the Available Tests window, select **OK**.

   The selected tests display in the Tests Ordered field on the Worklist window.

9. At the Worklist window, select **ACCEPT PATIENT**.

   Information about the next barcoded sample on the Sample Carousel displays on the Worklist window. If the other samples on the Sample Carousel have no barcodes, the fields on the Worklist window are empty.

10. Repeat steps 3–9 until tests are assigned for each patient sample.
11. To view HBsAg Confirmatory orders at the Worklist window, select **Display / Edit**.
12. To update the Worklist Display / Edit screen, select **Update**.

Reviewing Results of HBsAg Confirmatory Testing

Note HBsAg Confirmatory Test results are not sent to the LIS.

The following sections describe where to obtain confirmatory testing results.

QC Reports

Individual test result data and summarized confirmatory results for control samples display at the Control Review window and in the Control report. The following instructions explain how to review QC Reports:

1. At the tool bar, select **REVIEW**.

   The Review window displays.

2. Select **Time**.
3. Select **TODAY ONLY**.
4. Select **OK**.
5. Select **Control**.

   Note For individual HBsAg Confirmatory Tests, only the CPS displays. The calculated signal reduction displays for the HBSU (or HBSD) test pair.

For detailed QC reporting instructions, refer to Section 4, *Quality Control*.

QC Graph

The Calculated Signal Reduction for the HBSU (or HBSD) test pair displays as the result at the QC Graph window.

Note The diluted (HBSD) test pair only displays the calculated signal reduction on the QC graph if it is high enough to be calculated.

To display the results at the QC Graph window:

1. Select **QC**.
2. Select **GRAPHS**.

   The Controls Graph window displays.

   Note When the range is 25 days or less, each date displays on the graph; otherwise, some dates are represented by points.
3. Select the **From** field, then select a date from the calendar.

   Note The To date default is today's date. As needed, you can change this field.
4. Select the **To** field, then select a date from the calendar.
5. From the pull down list to the right of the **To** field, select the test.
6. From the next pull down list to the right, select the control name.
7. From the next pull down list to the right, select the control level.
8. From the **Lot#** pull down list, select the lot.

   The Controls Graph window displays the plotted data points and the results used to plot the graph.

For details about the QC Graph, see *Reviewing Control Data*, page 4-12.

Patient Reports

Detailed HBsAg Confirmatory results are available on the HBS Confirmatory Report. The following instructions explain how to print the HBS Confirmatory Report.

Note Results of HBsAg Confirmatory Testing for patients are not available on the Patient Review window or the Patient Short report.

Note Confirmatory results for patient samples display as line items on the Chartable Patient report.

Printing the HBS Confirmatory Report

1. At the Menu window, select **Confirm HBS**.

   The HBS Confirmatory Test Entry window displays.

2. Select **DATE TIME RANGE**.

   The Select Time Method window displays.

3. Select dates and times using the FROM and TO fields.
4. To return to the HBS Confirmatory Test window, select **OK**.
5. Select **PRINT RESULTS**.

Index

Numerics

2D scanner
    scanning kits 2-27
2-point adjustment 3-2

A

accessories
    supplies D-1
activate
    test
        reflexive 8-16
activating
    HBsAg onboard confirmatory testing I-6
add
    panel 8-19
adding
    calibration verifiers 2-55
    levels of control 4-9
    patients to worklist 2-43
adjusting
    system 3-1
adjustments 2-32
    adjustment log 2-39
    printout 2-36
    sample data 2-38
    two-point 3-2
    validity 2-38, 3-3
adjustors 1-14
    antibody 9-2
    barcode labels 1-14
allergen
    ranges
        viewing 8-15
    wedges 9-3
        daily
            maintenance 9-3
allergens 9-3
    adding
        adjustors to worklist 9-13
    adjustors
        adding to worklist 9-13
    assigning
        tests 9-21
    batch by rack 9-21
    controls
        with barcodes 9-17
    entering 9-4
    on board 9-7
    panels
        selecting 9-21
    patient samples
        with barcodes 9-19
    reagent status window 9-8
    replacing wedges 9-10
    status of wedges 9-7
    tests
        assigning to a rack 9-21
    vials 9-4
    wedges 9-4
        status 9-7
    worklist
        adding adjustors 9-13
allergy 9-1
    adjustors
        antibody 9-2
    assay
        overview 9-1
    control
        antibody 9-2
    kit
        overview 9-1
antibody
    adjustors 9-2
    control 9-2
approved tube sizes 2-3
as needed maintenance 5-29
    cleaning the monitor 5-29
assay
    allergy
        overview 9-1
assays
    2 adjustor 2-36
    adjusting 2-32
    competitive 3-6

troubleshooting 6-16
finding 2-63
pre-treated
troubleshooting 6-16
sandwich 3-5
troubleshooting 6-16
single-adjustor 2-37
tests ordered 2-62
troubleshooting guide 6-16
assigning
allergens
tests 9-21
tests 2-50
authorized representative B-1
auto dilutions
configure 8-3
automated
ordering
HBsAg confirmatory testing I-5
Automated Hepatitis B Surface Antigen Confirmatory Testing I-4
automated test process 2-11
automatic onboard confirmatory
testing
configuring I-8
AutoStart
configure 8-23
mode 2-13

B

barcode
reagent
scanner 1-7
sample
scanner 1-7
symbologies 2-1
barcode reader
bead pack 1-5
barcodes 2-44
adjustors 1-14
controls with 2-40
controls without 2-42
kits 1-14, 2-27
labels 2-2
patient samples without 2-46
batch by rack 2-50
bead pack 1-13
bead packs
replacing 2-20
status 2-18
status screen 2-18
biohazard
references A-2
biohazards
protection A-1
bottles
decontaminating 5-17
labels F-4
button
find
IMMULITE 2000 1-18
IMMULITE 2000 XPi 1-24
bypassing
water system C-2

C

cancelling on board dilutions 2-54
carousel
bead 1-5
reagent 1-6
sample 1-6
chart
slave motor 6-3
chartable patient report
disabling fields 8-25
enabling fields 8-25
moving fields 8-26
printing 8-27
restoring the template 8-27
checking
allergen wedges 9-7
dispense angle of reagent probe 5-21
kit components 2-60
probe wash bottle 5-8
reagent wedges 2-13
sample status 2-62
substrate 5-9
test

status 2-63
tests ordered 2-62
waste containers 5-10
water bottle 5-8
chemiluminescent reaction 1-33, 1-34
chemiluminescent substrate 1-15
clean out tool
waste chute 6-6
cleaning
fan filter 5-21
monitor 5-29
sample and reagent probes 5-5
trackball 5-29
waste tube 5-15
clearing LIS records 2-69
clinging
clots 6-8
clot detection transducer 5-20
decontaminating 5-20
clots
air in the transducer
IMMULITE 2000 6-10
clinging 6-8
correcting 6-7
detecting 6-7
gel
IMMULITE 2000 6-9
IMMULITE 2000 XPi 6-11
hanging
IMMULITE 2000 6-9
IMMULITE 2000 XPi 6-11
IMMULITE 2000 6-9
IMMULITE 2000 XPi 6-11
sample 6-7
CO2 scrubber replacement 5-27
common errors and solutions H-2
competitive
assay 3-6
competitive assays
troubleshooting 6-16
components
IMMULITE 2000 system 1-8, 1-9
IMMULITE 2000 XPi system 1-10, 1-11
kit 1-11
system 1-5
computer
restarting 5-6
settings 8-27
specifications E-2
confige
LIS 8-8
configurations panel
IMMULITE 2000 menu screen 1-21
configure
AutoStart
IMMULITE 2000 XPi 8-23
dilutions
auto 8-3
display options 8-1
ID information 8-3
panel 8-19
reflexive tests 8-15
reset
load scale 8-13
screen
using 8-1
settings 8-4
system 8-1
functions 8-14
test ranges 8-14
tests
reflexive 8-15
units 8-22
configure kit deactivation 2-30
configuring
automatic onboard confirmatory testing I-8
reflexive
tests I-7
confirmatory
kit (L2KCH1) I-4, I-5
testing
manual I-1
consumables
report 1-19
supplies D-1
control
not for on-line QC 4-6

controls 1-14
adding a level 4-9
changing a level 4-9
deleting tests 4-10
editing information 4-11
entering new information 4-3
levels 4-9
multi rule 4-7
qualitative 4-10
reported as ratios 4-11
reviewing data 4-12
single rule 4-6
troubleshooting
post adjustment 6-17
with barcodes 2-40
without barcodes 2-42
conventions
text and symbol 1-1
create
panel 8-19
cups
nesting 2-8
small sample 2-8
customer service B-2
cutoff
Efficiency Zone I-4

D

daily
maintenance 5-3
allergen
wedges 9-3
damaged or missing barcodes
patients 2-46
data
clearing LIS data 2-69
exporting 7-1
managing 7-1
resending to LIS 2-69
reviewing control data 4-12
saving to a CD or DVD 7-2
viewing and sending to LIS 7-3
date and time 8-28
resetting 8-28
decontaminating
bottles 5-17
bottles and lines 5-17
clot detection transducer 5-20
lines 5-19
delete
panel 8-21
reflexive test range 8-18
deleting
tests for a control 4-10
worklist entries 2-58
description
product 1-4
diagnosing
jam
tube indexer 6-3
diagnostic
jams 6-2
probe angle 5-16
diagnostics
initializing 5-4
programs 6-14
diluent 1-15
loading 2-1
dilution
change
test in a panel 8-21
specifications E-2
dilution well
sample 1-6
dilutions 2-51
auto
configure 8-3
loading diluent 2-1
manual 2-54
onboard 2-52
samples 2-51
direct water feed
optional C-1
display options
configure 8-1
displaying
worklist 2-57
DRD 1-6

sample 1-7
dual resolution dilutor
reagent 1-6

E

edit
configuration
reflexive test 8-17
panel 8-20
reflexive test
configuration 8-17
editing
control information 4-11
Efficiency Zone cutoff I-4
electrical
power loss 6-15
power requirements G-1
enter 1-3
entering
allergens and allergen wedges 9-4
new control information 4-3
error
messages H-1
error log
viewing 6-1
error messages H-1
common errors and solutions H-2
error report screen 6-1
flags H-4
list H-6
severity H-1
event log
viewing 6-4
exporting
data 7-1
to a CD or DVD 7-2

F

fan filter
cleaning 5-21
filling
probe wash bottle 5-8
reaction tube hopper 5-7
substrate 5-9
water bottle 5-8
filter
fan 5-21
find
button
IMMULITE 2000 XPi 1-24
finding
tubes 2-61
flags H-4
fluid usage specifications E-1
four-parameter logic 3-1

G

gel
clots
IMMULITE 2000 6-9
IMMULITE 2000 XPi 6-11
grabbers
sample rack 2-6
graph
QC
HBsAg confirmatory testing I-12

H

hanging
clots
IMMULITE 2000 6-9
IMMULITE 2000 XPi 6-11
HBsAg confirmatory
testing
results
reviewing I-12
HBsAg confirmatory testing
patient reports I-13
QC graph I-12
QC report I-12
HBsAg onboard confirmatory testing
activating I-6
home screen
IMMULITE 2000 1-17
IMMULITE 2000 XPi 1-23
hopper
reaction tube 1-6
horizontal toolbar
IMMULITE 2000 1-18
IMMULITE 2000 XPi 1-25

I

ID information 8-3
IFU 1-14
imaging scanner
  scanning kits 2-27
IMMULITE 2000 1-1
  clots 6-9
    air in the transducer 6-10
    gel 6-9
    hanging 6-9
  find button 1-18
  home screen 1-17
  horizontal toolbar 1-18
  menu screen
    tools panel 1-20
  software
    toolbar 1-18
  toolbar
    horizontal 1-18
    vertical 1-19
  vertical toolbar 1-19
IMMULITE 2000 menu screen configurations panel 1-21
IMMULITE 2000 menu screen task bar 1-22
IMMULITE 2000 system menu 1-20
IMMULITE 2000 XPi 1-1
  clots 6-11
    gel 6-11
    hanging 6-11
  find button 1-24
  horizontal toolbar 1-25
  menu screen
    configuration panel 1-27
    task bar 1-28
  menu screen tools panel 1-27
  sample rack status indicators 1-24
  software
    toolbar 1-24
  toolbar
    horizontal 1-25
    vertical 1-26
  vertical toolbar 1-26
  wedge status indicators 1-24
IMMULITE 2000 XPi home screen 1-23
IMMULITE 2000 XPi system menu 1-26
important notices 1-14
importing
  worklist 2-60
in vitro diagnostics (IVD) symbols F-1
information
  ID
    configure 8-3
initializing
  diagnostics 5-4
installation
  preparation G-1
instructions
  safety A-1
instructions for use 1-14
intercept of an adjustment, competitive 3-6
intercept of an adjustment, sandwich 3-5
internal calculations 1-33

J

jams
  diagnostic 6-2
  troubleshooting 6-2

K

kit
  allergy
    overview 9-1
  barcodes 1-14
  components
    stability
      onboard 9-3
  confirmatory (L2KCH1) I-4, I-5
kit deactivation
  configuring 2-30
kit load report 2-23
kits
  barcodes 2-27
  checking components 2-60
  components 1-11
  reviewing information 2-28

L

L2KCH1
  kit

confirmatory I-5
label
warning
laser F-4
labeling
patient sample tubes 2-1
labels F-4
barcode 2-2
bottles and waste container F-4
laser
warning
label F-4
limited warranty B-1
lines
decontaminating 5-19
liquid waste 5-11
LIS
clearing data 2-69
configure 8-8
configuring 8-8
resend
results 7-4
resending data 2-69
reviewing results 2-67
sending
results 7-4
sending results 2-69
view and send data 2-69, 7-3
loading
diluent 2-1
HBsAg confirmatory samples I-10
samples 2-1
confirmatory I-3
loading microsample tubes 2-7
location of tube 2-61
logging off 5-3
logs
adjustment 2-39

M

maintenance 5-1
as needed 5-29
daily 5-3
allergen
wedges 9-3
monthly 5-16
performing 5-1
weekly 5-15
management
quality control 4-3
managing
data 7-1
manual
testing
confirmatory I-1
manual confirmatory testing
HBsAg Positive Control I-1
ordering positive control I-2
ordering tests I-1
manual dilutions 2-54
manually ordering
HBsAg confirmatory tests I-11
master curve
generation 3-1
menu
IMMULITE 2000 system 1-20
IMMULITE 2000 XPi system 1-26
options 1-30
troubleshooting from 6-1
menu screen
configuration panel
IMMULITE 2000 XPi 1-27
configurations panel
IMMULITE 2000 1-21
task bar
IMMULITE 2000 1-22
IMMULITE 2000 XPi 1-28
tools panel
IMMULITE 2000 1-20
IMMULITE 2000 XPi 1-27
messages
error H-1
severe H-1
warning H-1
microsampling 2-7
modes
AutoStart 2-13
operating 2-12

PAUSE 2-12
RUN 2-12
STOP 2-13
modifying
worklist entries 2-58
module
diluent 1-15
probe wash 1-15
monitor
cleaning 5-29
monthly maintenance 5-16
multi rule 4-7

N

nesting cups 2-8
notices
important 1-14

O

onboard dilutions 2-52
cancelling 2-54
onboard stability
kit components 9-3
online help 1-29
searching 1-32
operating
modes 2-12
system 2-1
operation
direct feed water system C-1
optional
direct water feed C-1
options
display
configure 8-1
menu 1-30
test entry 2-49
ordering
automated
HBsAg confirmatory testing I-5
HBsAg confirmatory tests
manually I-11
output
specifications 1-5, E-1
overview
allergy
assay 9-1
kit
allergy 9-1
software 1-16

P

pack
bead 1-13
panel
add 8-19
test 8-21
configure 8-19
create 8-19
delete 8-21
edit 8-20
test
remove 8-21
panels
allergens
selecting 9-21
selecting 2-49
patient
report
chartable 8-24
reports
HBsAg confirmatory testing I-13
patient samples
labelling 2-1
patient samples with 2-44
PAUSE mode 2-12
photomultiplier tube 1-6
pipetting sequence 1-5
pipettor
reagent 1-6
sample 1-7
PMT 1-6
point-to-point method 3-2
power
loss 6-15
power requirements G-1
preparation
installation G-1
pre-treated assays

troubleshooting 6-16
priming
sample and reagent probes 5-12
substrate probe 5-14
water probe 5-13
principles of operation 1-4
printing
chartable patient report 8-27
HBsAg confirmatory report I-14
worklists 2-57
probe angle diagnostic 5-16
probe wash 1-15, 5-8
checking and filling 5-8
probe wash bottle 5-8
probes
cleaning 5-5
priming 5-12, 5-13, 5-14
replacing 6-12
processing
samples
confirmatory I-3
processor
tube 1-7
product description 1-4
programs
diagnostics 6-14
protection
biohazards A-1
pump
substrate
substrate
pump 1-7
water 1-7

Q

QC 1-14, 4-1
qualitative controls 4-10
quality control 4-1
quality control management 4-3
quarterly maintenance 5-27

R

rack
standard sample 2-10
tube top 2-10, 2-11
racks
assigning allergen tests 9-21
assigning tests 2-50
range
reflexive
test
delete 8-18
ranges
test
configure 8-14
ratios
calculating 3-8
reaction
chemiluminescent 1-33, 1-34
reaction tube hopper 1-6
reaction tube hopper, filling 5-7
readjustment 3-6
intercepts 3-6
slopes 3-6
reagent
barcode
scanner 1-7
carousel 1-6
wedges 1-12
reagent pipettor 1-6
reagent probe
checking dispense angle 5-21
cleaning 5-5
priming 5-12
replacing 6-12
reagent wedges
status screen 2-13
reagents
replacing wedges 2-16
status of wedges 2-13
reference
requirements
system G-3
reflexive
test
activate 8-16
set up 8-16
tests
configuring I-7

reflexive tests
configure 8-15
remove
test
from panel 8-21
replacing
allergen wedges 9-10
bead packs 2-20
CO2 scrubber 5-27
reagent wedges 2-16
sample and reagent probes 6-12
report
consumables 1-19
HBsAg confirmatory
printing I-14
kit load 2-23
patient
chartable 8-24
QC
HBsAg confirmatory testing I-12
reports 8-24
patien
HBsAg confirmatory testing I-13
representative
authorized B-1
requirements
power G-1
space G-1
system
power G-1
reference G-3
temperature G-2
water G-2
resend results to LIS 7-4
resending results 2-69
reset
load scale
configure 8-13
restarting
computer 5-6
Results
sending
LIS 7-4
results
flags H-4
HBsAg confirmatory
reviewing I-12
resend to LIS 7-4
reviewing 2-64
manual confirmatory testing I-3
searching for 2-66
WATERTEST 5-32
reviewing
control data 4-12
kit information 2-28
LIS results 2-67
results 2-64
HBsAg confirmatory
testing I-12
manual confirmatory testing I-3
routine maintenance 5-1
as needed 5-29
daily 5-3
monthly 5-16
weekly 5-15
RUN mode 2-12
running assays 2-61

S

safety instructions A-1
sample
barcode
scanner 1-7
carousel 1-6
clots 6-7
dilution well 1-6
DRD 1-7
patient
without barcodes 2-46
pipettor 1-7
sample cups
tube top 2-8
sample probe
cleaning 5-5
priming 5-12
replacing 6-12
sample rack
standard 2-10

status indicators
IMMULITE 2000 XPi 1-24
tube top 2-10, 2-11
sample rack grabbers 2-6
sample volume 2-3
samples
confirmatory
loading I-3
processing I-3
diluting 2-51
HBsAg confirmatory samples
loading I-10
labeling patients 2-1
loading 2-1
patient
with barcodes 2-44
status 2-62
tube location 2-61
without barcodes 2-46
sandwich
assay 3-5
sandwich assays
troubleshooting 6-16
saving
data to a CD or DVD 7-2
scan 1-3
scanner
hand-held 2d 1-6
imaging 1-6
reagent barcode 1-7
sample barcode 1-7
scanning
kit barcodes 1-14, 2-27
searching
online help 1-32
results 2-66
select 1-3
selecting
allergens
panels 9-21
Sending
Results to the LIS 7-4
sending results to LIS 2-69
service B-1, B-2
customer B-2
set up
test
reflexive 8-16
severe
messages H-1
single rule 4-6
single-adjustor assays 2-37
sizes
tube
approved 2-3
slave motor chart 6-3
small sample cups 2-8
software
overview 1-16
updating 8-29
solid waste 5-10
sound 8-28
space requirements G-1
specifications 1-5
computer E-2
dilution E-2
fluid usage E-1
output E-1
system E-1
stability
onboard
kit components 9-3
status
allergen wedges 9-7
allergens
reagent status window 9-8
bead packs 2-18
reagent wedges 2-13
samples 2-62
status indicators
sample rack
IMMULITE 2000 XPi 1-24
wedge
IMMULITE 2000 XPi 1-24
status screen
bead packs 2-18
STOP mode 2-13
substrate 1-15

checking and filling 5-9
chemiluminescent 1-15
Substrate probe
priming 5-14
supplies D-1
accessories D-1
consumables D-1
test 1-15
symbologies
barcode 2-1
symbols F-1
system
adjusting 3-1
components 1-5
configure
functions 8-14
configuring 8-1
IMMULITE 2000 components 1-8, 1-9
IMMULITE 2000 XPi components 1-10, 1-11
operation 2-1
power
requirements G-1
requirements
reference G-3
specifications E-1
troubleshooting 6-1
water C-1
systems 1-1

T

task bar
IMMULITE 2000 menu screen 1-22
temperature
requirements G-2
temperatures
viewing
system 6-2
test
panel
add 8-21
reflexive
range
delete 8-18
set up 8-16
supplies 1-15
test ranges
configure 8-14
Testing
Automated Hepatitis B Surface Antigen Confirmatory I-4
testing
automatic onboard confirmatory
configuring I-8
HBsAg confirmatory
QC graph I-12
QC report I-12
tests
assigning to a rack 2-50
automated 2-11
entry 2-49
reflexive
configuring I-7
toolbar 1-18
horizontal
IMMULITE 2000 1-18
IMMULITE 2000 XPi 1-25
IMMULITE 2000 software 1-18
IMMULITE 2000 XPi software 1-24
vertical
IMMULITE 2000 1-19
IMMULITE 2000 XPi 1-26
tools panel
IMMULITE 2000 menu screen 1-20
touch screen
cleaning 5-29
trackball
cleaning 5-29
troubleshooting
assay
quick reference 6-16
competitive assays 6-16
controls
post adjustment 6-17
error report screen 6-1
from the menu 6-1
jams 6-2
list of errors H-6

pre-treated assays 6-16
sandwich assays 6-16
system 6-1
water system C-2
tube
photomultiplier 1-6
top sample cups 2-8
tube hopper 5-7
tube location 2-61
tube top sample cups 2-8
tubes
microsample
loading 2-7
patient sample
labeling 2-1
sizes
approved 2-3
two-point adjustment 3-2

U

units
configure 8-22
updating the system 8-29

V

validity
adjustments 2-38, 3-3
verifiers
adding to worklist 2-55
vertical toolbar
IMMULITE 2000 1-19
IMMULITE 2000 XPi 1-26
viewing
adjustment log 2-39
allergens
onboard 9-7
day error log 6-1
event log 6-4
ranges
allergen 8-15
system
temperatures 6-2
volume
sample 2-3
volume controls 8-28

W

warning
label
laser F-4
messages H-1
wash station
bead 1-5
waste chute
clean out tool 6-6
waste container
label F-4
waste containers
checking 5-10
liquid waste 5-11
solid waste 5-10
waste tube cleaning 5-15
water
pump 1-7
requirements G-2
water bottle
checking and filling 5-8
decontaminating 5-17
water probe
priming 5-13
water system C-1
bypassing C-2
troubleshooting C-2
water test 5-30
water TestPM 5-24
evaluating results 5-27
WATERTEST results 5-32
wedge
reagent 1-12
status indicators
IMMULITE 2000 XPi 1-24
wedges
allergen 9-3
reagent
status screen 2-13
weekly maintenance 5-15
window
configuration settings 8-4
worklist
adding patients 2-43

adding verifiers 2-55
allergens
    adding adjustors 9-13
deleting entries 2-58
display options 2-56
displaying 2-57
importing 2-60
management 2-56
modifying entries 2-58
overview 2-39
printing 2-57